RANGE
OUTDOOR LIVING

Manufactured by:
Range Outdoor Living
3305 Airport Drive, Pittsburg, KS 66762
833-689-8428

Basepoint Business Centre: Rivermead Drive,Westlea, Swindon SN5 7EX Phone:
0800-118-2476 J.P. Coenstraat 7, The Bridge, The Hague, 2595 WP, Netherlands Phone: 08005678990

LANCASTER GALLEY OUTDOOR KITCHEN

MODEL # : 2404137, 2601031, 2601000

WARNING
Cancer and Reproductive Harm
www.P65Warnings.ca.gov



Please visit www.rangeoutdoorliving.com
For the most up to date assembly manual, to register your product, or to order replacement parts *Para obtener instrucciones en español, visite www.rangeoutdoorliving.com*

BILT®
EASY STEP-BY-STEP
3D INTERACTIVE INSTRUCTIONS
DOWNLOAD THE FREE APP
App Store Google play

OWNER'S MANUAL - BASIC SETUP DIMENSIONS & ASSEMBLY NOTES

It is critically important that you start with square and level footings or concrete pad to attach your structure

- **Pay close attention to the items needed for each step. Make sure you are using the correct hardware for each step. Using incorrect hardware may result in improper assembly**
- **Remember to double check for underground utilities and overhead electrical lines**

Post mounts are provided with your structure which allows you to permanently install your structure to a pre-existing or new wood or concrete surface. See Anchor Instructions for further details and recommendations.

- **The hardware to attach the post mounts to the structure is included.**
- **The hardware to mount the structure permanently to a concrete surface is included.**
- **The hardware to mount the structure permanently to a wood deck is NOT included and will need to be purchased separately. You must ensure there is ample structural support under the deck before permanently attaching.**

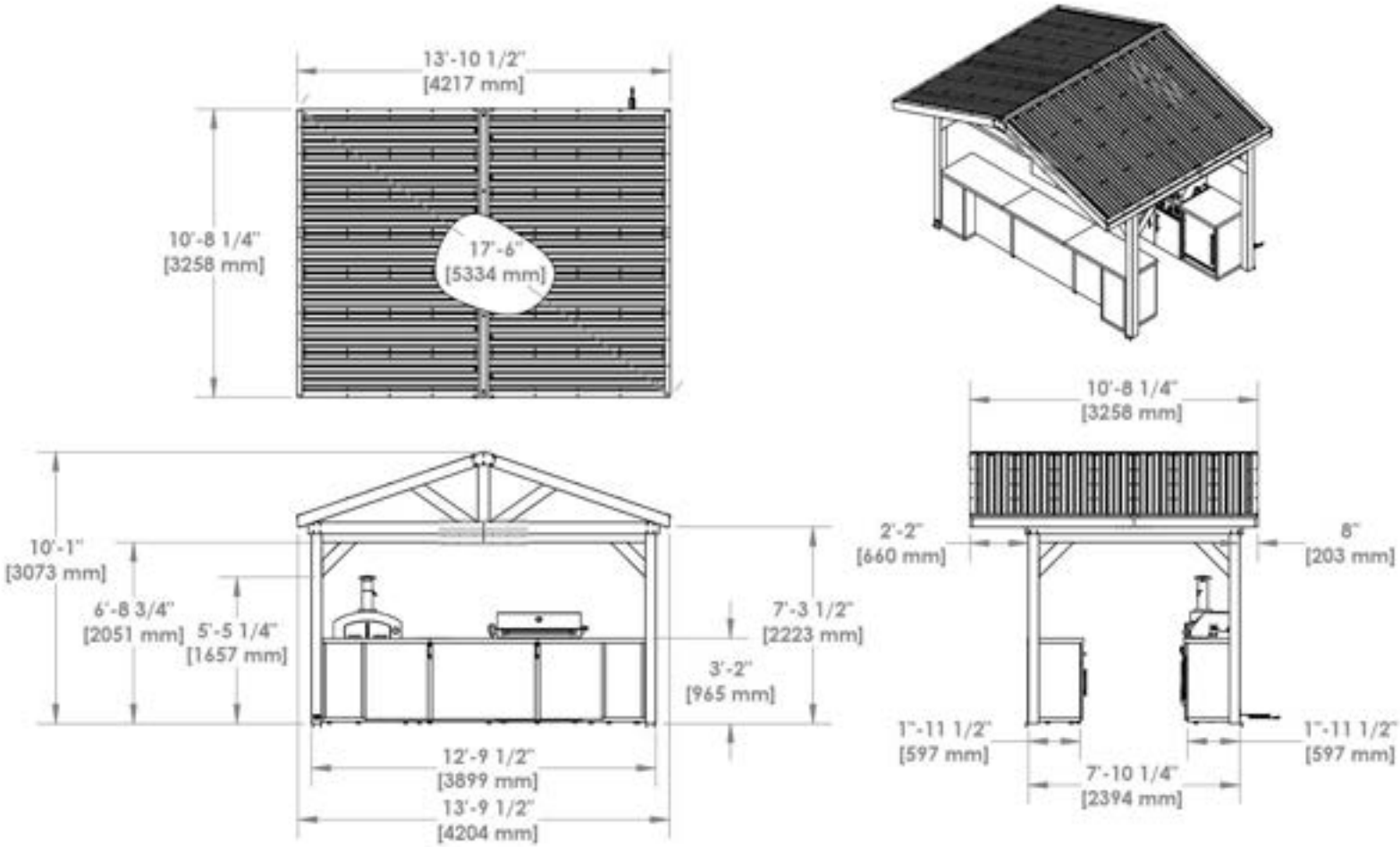

OWNER'S MANUAL - ANCHORING LAYOUT

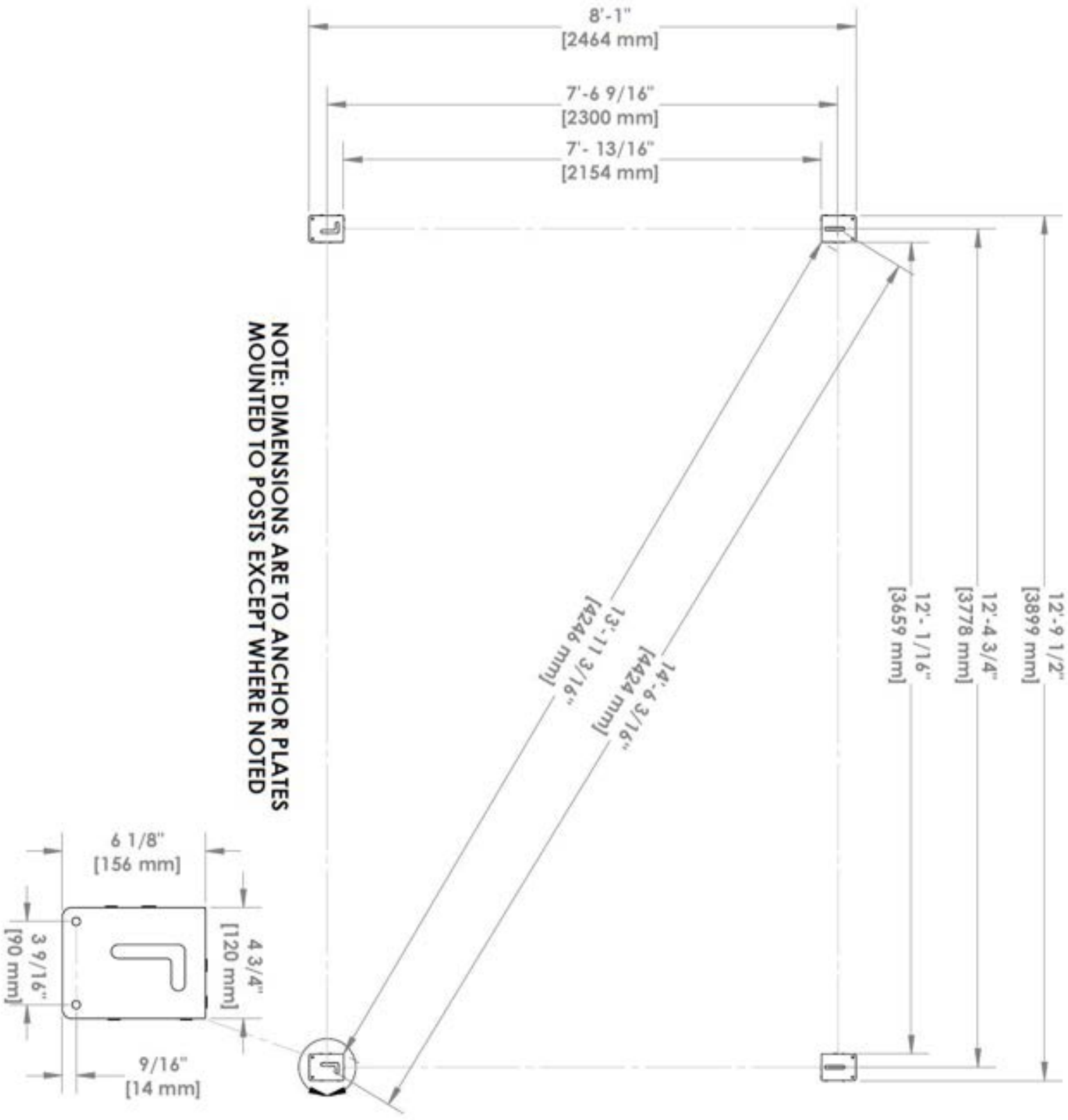

OWNER'S MANUAL - UTILITY LAYOUT

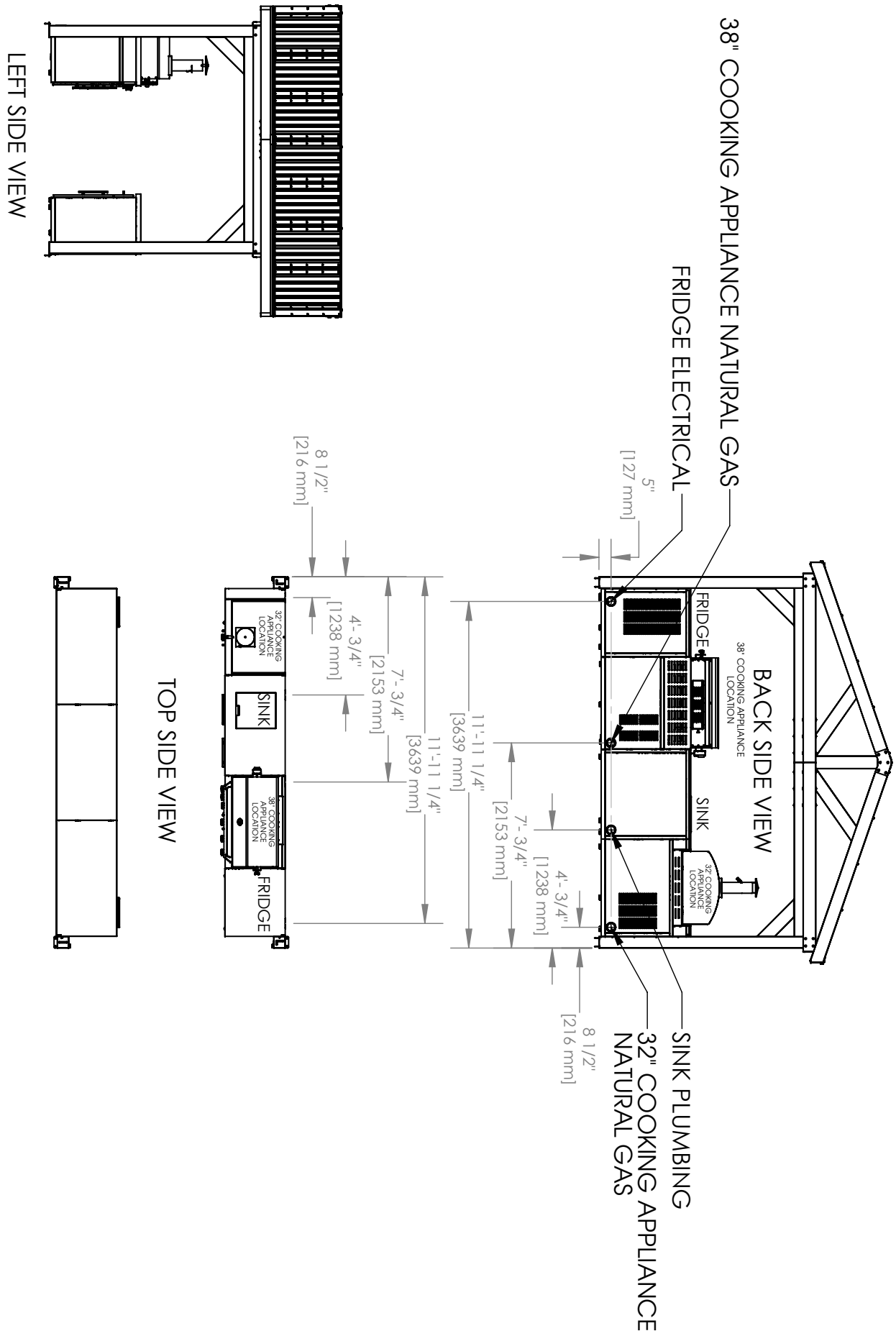

IMPERIAL MEASUREMENTS ROUNDED TO THE NEAREST 1/4"

OWNER'S MANUAL - PARTS IDENTIFICATION

METAL COMPONENTS (NOT TO SCALE)

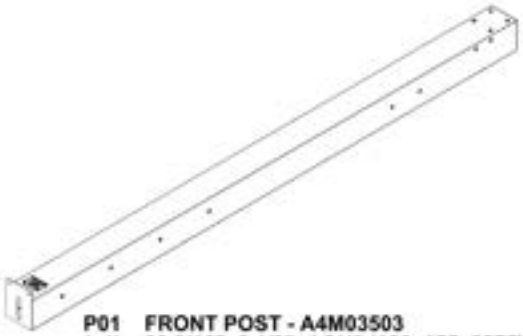

P01 FRONT POST - A4M03503
(x1) 89 9/16"x6 1/8"x4 3/4" (120x155x2275)

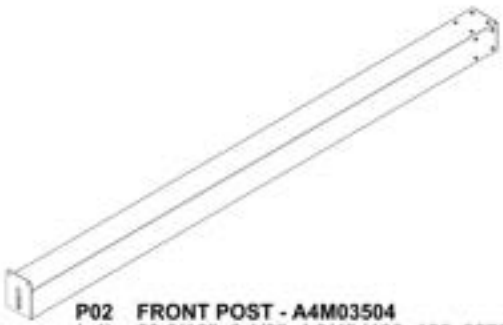

P02 FRONT POST - A4M03504
(x1) 89 9/16"x6 1/8"x4 3/4" (120x155x2275)

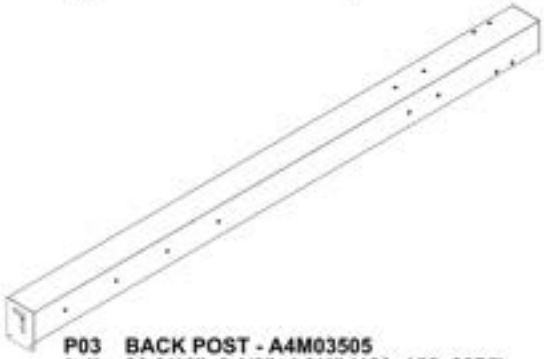

P03 BACK POST - A4M03505
(x1) 89 9/16"x6 1/8"x4 3/4" (120x155x2275)

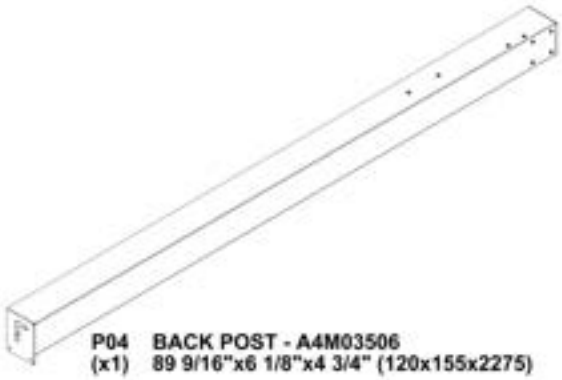

P04 BACK POST - A4M03506
(x1) 89 9/16"x6 1/8"x4 3/4" (120x155x2275)

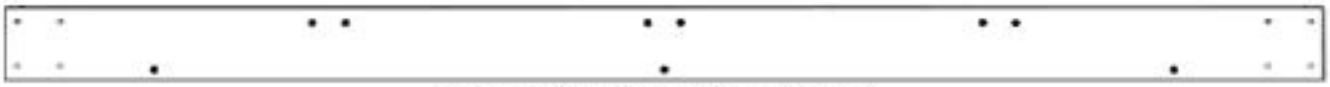

B01 SIDE BEAM ASSEMBLY - A4M03507
(x2) 94 5/16"x5 1/4"x1 7/16" (36x134x2396)

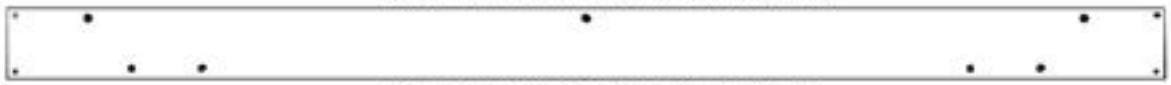

B02 SIDE BEAM ASSEMBLY - A4M03508
(x2) 84 13/16"x5 1/4"x1 7/16" (36x134x2154)



B03 FRONT BEAM ASSEMBLY - A4M03509
(x2) 78 3/16"x5 1/4"x1 7/16" (36x134x1986)

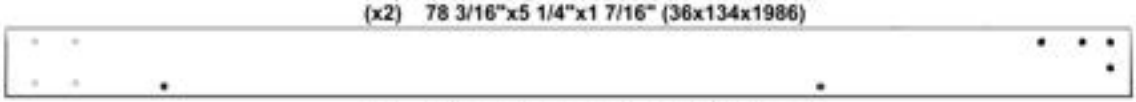

B04 FRONT BEAM ASSEMBLY - A4M03510
(x2) 78 3/16"x5 1/4"x1 7/16" (36x134x1986)



B05 FRONT BEAM ASSEMBLY - A4M03511
(x2) 72"x5 1/4"x1 7/16" (36x134x1829)

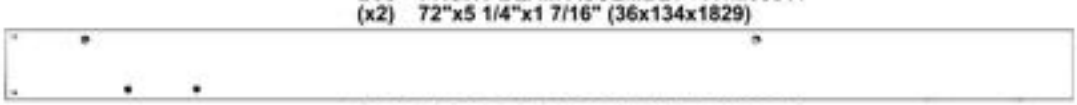

B06 FRONT BEAM ASSEMBLY - A4M03512
(x2) 72"x5 1/4"x1 7/16" (36x134x1829)



B07 GABLE ARM ASSEMBLY - A4M03513
(x2) 29 3/16"x5 1/4"x1 7/16" (36x134x741)



B08 GABLE ARM ASSEMBLY - A4M03514
(x2) 40 1/16"x5 1/4"x1 7/16" (36x134x1017)



B09 GABLE ARM ASSEMBLY - A4M03515
(x2) 40 1/16"x5 1/4"x1 7/16" (36x134x1017)

OWNER'S MANUAL - PARTS IDENTIFICATION

METAL COMPONENTS (NOT TO SCALE)



B10 RIDGE BEAM ASSEMBLY - A4M03516
(x1) 67 1/16"x5 1/4"x1 7/16" (36x134x1704)



B11 RIDGE BEAM ASSEMBLY - A4M03517
(x1) 61 3/16"x5 1/4"x1 7/16" (36x134x1554)



B12 GABLE BEAM ASSEMBLY - A4M03518
(x2) 88 13/16"x5 1/4"x1 7/16" (36x134x2255)



B13 GABLE BEAM ASSEMBLY - A4M03519
(x2) 88 13/16"x5 1/4"x1 7/16" (36x134x2255)



B14 DRIP BEAM ASSEMBLY - A4M03520
(x2) 53 11/16"x4 13/16"x1 7/16" (36x122x1364)



B15 DRIP BEAM ASSEMBLY - A4M03521
(x2) 71 3/4"x4 13/16"x1 7/16" (36x122x1822)



R01 RAFTER ASSEMBLY - A4M03522
(x2) 86 3/8"x4 5/16"x3 1/8" (80x110x2194.6)

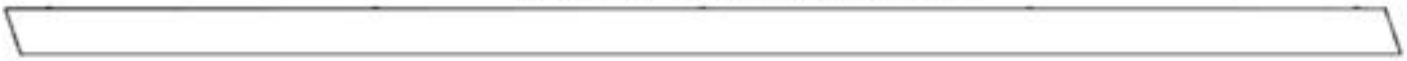

R02 RAFTER ASSEMBLY - A4M03523
(x2) 86 3/8"x4 5/16"x3 1/8" (80x110x2194.6)



R03 RAFTER ASSEMBLY - A4M03524
(x6) 86 3/8"x4 5/16"x3 1/8" (80x110x2194.6)



C01 CORBEL ASSEMBLY - A4M03525
(x4) 21 13/16"x5 1/4"x2 3/4" (70x134x553.5)



C02 CORBEL ASSEMBLY - A4M03526
(x4) 21 13/16"x5 1/4"x2 3/4" (70x134x553.5)



C03 CORBEL ASSEMBLY - A4M03527
(x2) 23 3/8"x12"x1 7/16" (36x304x593)



E01 PURLIN ASSEMBLY - A4M03800
(x10) 71 11/16"x1 15/16"x1 9/16" (40x50x1820.60)

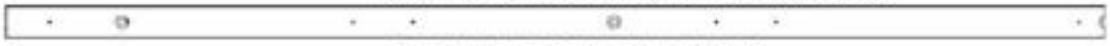

E02 PURLIN ASSEMBLY - A4M03801
(x10) 53 5/8"x1 15/16"x1 9/16" (40x50x1362.40)



J1 SPLICE BRACKET - A4M02230
(x4) 1 5/16"x5 3/16"x39 3/8" (33.2x131.2x1000)



J2 SPLICE BRACKET - A4M01270
(x1) 1 1/4"X5 1/8"X15 3/4" (33x131x400)



J6 SPLICE BRACKET - A4M03806
(x2) 19 11/16"x4 11/16"x32.5 (32.5x118.5x500)

OWNER'S MANUAL - PARTS IDENTIFICATION

METAL COMPONENTS (NOT TO SCALE)



J3 GABLE BRACKET - A4M03805
(x2) 11 1/8"x6 7/16"x1/16" (2x163x282)



J4 BEAM BRACKET - A4M02990
(x8) 1"x1 5/16"x5 1/16" (25x33.2x128)



J5 RAFTER BRACKET - A4M03803
(x6) 3 5/8"x2 11/16"x2 1/16" (52x68x91.5)



J7 RAFTER BRACKET - A4M03802
(x4) 3 5/8"x2 3/16"x2" (50x55x92)



J8 GABLE BRACKET - A4M03804
(x4) 4 13/16"x1 9/16"x1 9/16" (40x40x123)



J9 BEAM BRACKET - A4M03807
(x4) 1"x1 5/16"x4 9/16" (25x33.20x116)



J10 SUPPORT RING - A4M03808
(x5) 13/16"x7/16" (11x20x)



A4M01352 HOLE COVER
(x70)



A6P00530 2-WAY SQUARE PLUG
(x10)



A4M03528 STEEL SHEETING
(x14)



A4M03529 DRIP TRIM
(x2)



A4M03530 DRIP TRIM
(x2)



A4M03531 DRIP TRIM SPLICE
(x2)



A4M03532 EDGE TRIM
(x4)

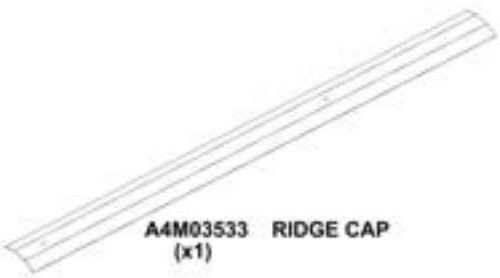

A4M03533 RIDGE CAP
(x1)

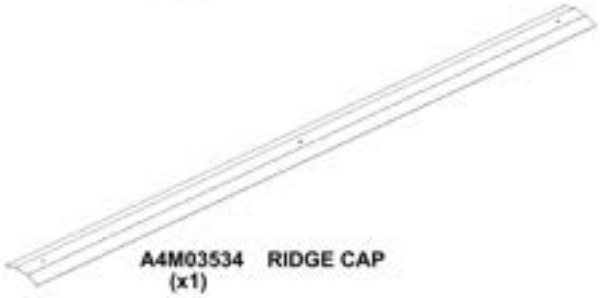

A4M03534 RIDGE CAP
(x1)



A4M03535 RIDGE CAP SPLICE
(x1)

OWNER'S MANUAL - PARTS IDENTIFICATION

METAL COMPONENETS (NOT TO SCALE)



D1 PIZZA OVEN CABINET DOOR ASSEMBLY L - A4M03546
(x1) 28 7/16"x19 5/8"x15/16" (24x498x722.5)



D2 PIZZA OVEN CABINET DOOR ASSEMBLY R - A4M03555
(x1) 28 7/16"x19 5/8"x15/16" (24x498x722.5)

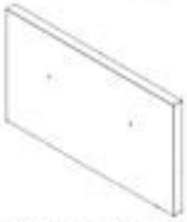

D3 SINK CABINET DRAWER PANEL ASSEMBLY - A4M03569
(x1) 17 3/4"x10 1/4"x15/16" (24x260x451)



D4 SINK CABINET DRAWER BODY ASSEMBLY - A4M03571
(x1) 22 1/4"x16 1/16"x6 7/16" (164.2x408.4x565.4)



D5 SINK CABINET TRIM PANEL - A4M03576
(x1) 17 13/16"x10 1/4"x1" (26x260x452)



D6 SINK CABINET DOOR ASSEMBLY L - A4M03577
(x1) 22 1/4"x17 13/16"x15/16" (24x452x565)



D7 GRILL CABINET DOOR ASSEMBLY L - A4M03587
(x1) 24 13/16"x19 1/16"x15/16" (24x484.15x630)



D8 GRILL CABINET DOOR ASSEMBLY R - A4M03590
(x1) 24 13/16"x19 1/16"x15/16" (24x484.15x630)



D9 TRASH CAN PANEL ASSEMBLY - A4M03608
(x1) 22 1/4"x17 3/4"x15/16" (24.00x451.00x565.00)



D10 DOOR PANEL ASSEMBLY - A4M03617
(x1) 24 3/4"x17 13/16"x15/16" (24x452x628)



D11 DRAWER PANEL ASSEMBLY - A4M03619
(x2) 17 13/16"x8 1/16"x15/16" (24x205x452)



D12 DRAWER BODY ASSEMBLY - A4M03621
(x2) 22 1/4"x15 13/16"x4 15/16" (126x402x565)

OWNER'S MANUAL - PARTS IDENTIFICATION

METAL COMPONENETS (NOT TO SCALE)



D13 DOOR PANEL ASSEMBLY - A4M03643
(x1) 24 3/4"x17 13/16"x15/16" (24x452x628)



G10 GRILL CABINET BACK PANEL ASSEMBLY - A4M03055
(x1) 1 3/16"x22 7/8"x38 3/16" (30x581x970)

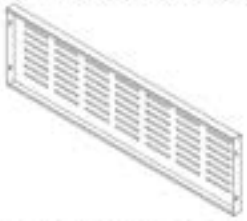

G11 GRILL VENTILATION PANEL - A4M03056
(x1) 1 5/16"x11 3/16"x38 3/16" (33x284x970)



H2 STAINLESS STEEL HANDLE - A4M03024
(x12) 5/8"x1 9/16"x11 13/16" (16x40x300)



H3 TRASH CAN BRACKET ASSEMBLY - A4M03610
(x1) 18 1/16"x15 13/16"x (35x401.60x458)



H4 HORIZONTAL BEAM ASSEMBLY L - A4M03575
(x4) 16 1/4"x3 3/8"x1" (25x85x413)



H5 PIZZA OVEN CABINET HINGE CHANNEL ASSEMBLY - A4M03558
(x1) 26 5/8"x2 15/16"x11/16" (18x74.80x676)



H6 TUBE FRAME SUPPORT - A4M03627
(x2) 35 15/16"x15 9/16"x1 15/16" (50x394.5x912.5)



H7 HORIZONTAL CHANNEL ASSEMBLY - A4M03623
(x4) 16 5/16"x2 15/16"x1" (25x75x414)



L1 PIZZA OVEN CABINET SHELF - A4M03548
(x1) 23 1/4"x19 5/16"x1" (25x490.5x591)



L2 GRILL CABINET SHELF ASSEMBLY - A4M03589
(x1) 23 1/4"x18 3/8"x1" (25x467x591)



L3 SHELF ASSEMBLY M - A4M03645
(x1) 45 7/8"x15 7/16"x1" (25x392.2x1166)

OWNER'S MANUAL - PARTS IDENTIFICATION

METAL COMPONENETS (NOT TO SCALE)



L4 SHELF ASSEMBLY - A4M03644
(x2) 27 3/4"x15 7/16"1" (25x392.2x705)



A1 TABLE BRACKET ASSEMBLY - A4M03634
(x2) 6 15/16"x6 15/16"x1 15/16" (50x176x176)



A2 MAGNET BRACKET - A4M03026
(x7) 1"x1 1/4"x3 1/8" (25x31x80)



A5 SHELF BRACKET - A4M03141
(x4) 5/8"x7/8"x2 1/16" (16x22x53)



A6 ANGLED BRACKET - A4M03053
(x3) 1 3/8"x1 15/16"x17 1/8" (35x50x435)



A9 HOSE BRACKET ASSEMBLY - A4M03060
(x2) 1 1/4"x1 7/16"x2 9/16" (31.5x36.5x65)



A13 GAS TANK HOLDER ASSEMBLY - A4M03047
(x2) 1 15/16"x12 7/8"x14 3/4" (49x327x374)



A11 TRIANGLE PANEL - A4M03086
(x2) 13/16"x13 3/4"x13 3/4" (20x350x350)



M1 PIZZA OVEN CABINET MARBLE - A4M03553
(x1) 24 13/16"x4 5/16"x1 15/16" (50x109x630)

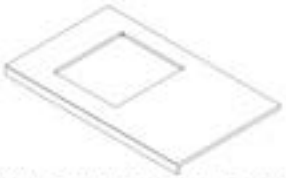

M2 SINK CABINET MARBLE - A4M03568
(x1) 41 1/2"x24 15/16"x1 15/16" (49x633x1054)

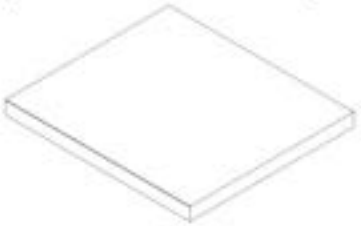

M3 FRIDGE CABINET MARBLE - A4M03602
(x1) 28 1/8"x24 15/16"x1 15/16" (50x634x715)



M4 BAR TABLE MARBLE - A4M03616
(x2) 47 15/16"x24 15/16"x1 15/16" (50x634x1218)



M6 BAR TABLE MARBLE - A4M03633
(x1) 47 7/8"x24 7/8"x1 15/16" (49x632x1216)



M5 SINK COVER MARBLE - A4M03147
(x1) 11/16"x14 3/4"x16 5/16" (18x375x415)

OWNER'S MANUAL - PARTS IDENTIFICATION

METAL COMPONENETS (NOT TO SCALE)



F1 PIZZA OVEN CABINET FLOOR PANEL ASSEMBLY - A4M03538
(x1) 40 3/16"x23 3/8"x2 5/8" (66x594x1020)



F2 GRILL CABINET FLOOR PANEL ASSEMBLY - A4M03048
(x1) 2 5/8"x23 3/8"x38 1/4" (66x594x972)

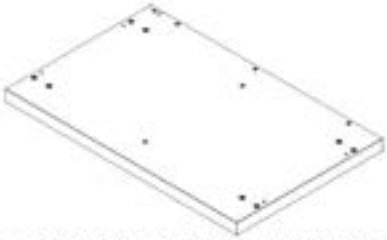

F3 SINK CABINET FLOOR PANEL ASSEMBLY - A4M03560
(x1) 37 3/16"x23 3/8"x2 5/8" (66x594x944)



F4 FRIDGE CABINET FLOOR PANEL ASSEMBLY - A4M03595
(x1) 28 1/8"x23 3/8"x2 5/8" (66x594x715)

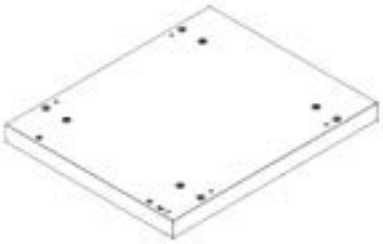

F5 FLOOR PANEL ASSEMBLY - A4M03611
(x2) 23 3/8"x19 1/8"x2 5/8" (66x486x594)



G1 PIZZA OVEN CABINET BACK PANEL ASSEMBLY - A4M03542
(x1) 38 3/4"x26 1/2"x1 3/16" (30x673.5x984)



O8 PIZZA OVEN VENTILATION PANEL - A4M03078
(x1) 1 3/16"x3 3/4"x31 7/16" (30x95x798)



G3 SINK CABINET BACK PANEL ASSEMBLY - A4M03564
(x1) 34 5/16"x33 3/8"x1 3/16" (30x847.2x872)



G4 FRIDGE CABINET BACK PANEL ASSEMBLY - A4M03599
(x1) 25 5/16"x33 3/8"x1 3/16" (30x847.2x643)



G5 BACK PANEL ASSEMBLY - A4M03624
(x2) 33 3/8"x16 5/16"x1 3/4" (45x414x847.2)



G6 BACK PANEL - A4M03631
(x2) 34"x27 3/4"x1" (25x705x864)



G7 BACK PANEL - A4M03629
(x1) 45 7/8"x34"x1" (25x864x1166)

OWNER'S MANUAL - PARTS IDENTIFICATION

METAL COMPONENETS (NOT TO SCALE)



S1 PIZZA OVEN CABINET SIDE PANEL ASSEMBLY - A4M03540
(x1) 26 9/16"x23 3/8"x1 3/8" (35x594x675)



S2 PIZZA OVEN CABINET SIDE PANEL ASSEMBLY M - A4M03545
(x1) 26 1/2"x23 3/8"x1 3/8" (35x593x673.5)



S3 SINK CABINET SIDE PANEL ASSEMBLY L - A4M03562
(x1) 33 3/8"x23 3/8"x1 3/8" (35.00x594.00x848.20)



S4 SINK CABINET SIDE PANEL ASSEMBLY R - A4M03563
(x1) 33 3/8"x23 3/8"x2 5/8" (67x594x848.20)



S5 SINK CABINET SIDE PANEL ASSEMBLY M - A4M03567
(x1) 33 3/8"x23 3/8"x2 3/16" (56.2x593x847)



S6 GRILL CABINET SIDE PANEL ASSEMBLY M - A4M03586
(x1) 23 3/8"x22 7/8"x1 3/8" (35x581x593)



S7 FRIDGE CABINET SIDE PANEL ASSEMBLY L - A4M03597
(x1) 33 7/16"x23 3/8"x2 1/16" (53x594x849.7)



S8 FRIDGE CABINET SIDE PANEL ASSEMBLY R - A4M03598
(x1) 33 3/8"x23 3/8"x1 15/16" (50x594x848.20)



S9 SIDE PANEL ASSEMBLY - A4M03638
(x1) 33 3/8"x23 3/8"x1 15/16" (50x594x848.2)



S10 SIDE PANEL ASSEMBLY - A4M03613
(x1) 33 3/8"x23 3/8"x1 15/16" (50x594x848.2)



S11 SIDE PANEL ASSEMBLY - A4M03614
(x1) 33 3/8"x23 3/8"x1 15/16" (49.2x594x848.2)



S12 SIDE PANEL ASSEMBLY - A4M03637
(x1) 33 3/8"x23 3/8"x1 15/16" (49.2x594x848.2)

OWNER'S MANUAL - PARTS IDENTIFICATION

METAL COMPONENETS (NOT TO SCALE)



T1 PIZZA OVEN CABINET TABLETOP ASSEMBLY - A4M03543
(x1) 40 3/16"x23 3/8"x1 1/4" (32x594x1020)



T2 GRILL TABLETOP ASSEMBLY - A4M03057
(x1) 1 1/4"x23 3/8"x38 3/16" (32x594x970)



T3 PIZZA OVEN CABINET MARBLE PANEL ASSEMBLY R - A4M03551
(x1) 612x4 5/16"x6 3/4" (109x172.2x612)



T4 SINK CABINET TABLETOP FRAME - A4M03566
(x1) 37 3/16"x24 1/8"x1 1/4" (32x612x944)



T5 PIZZA OVEN CABINET MARBLE PANEL ASSEMBLY L - A4M03549
(x1) 24 1/8"x4 5/16"x6 3/4" (109x172.2x612)



T6 TABLETOP PANEL ASSEMBLY - A4M03615
(x1) 47 3/16"x23 3/8"x1 1/4" (32x593x1199)



T7 FRIDGE CABINET TABLETOP - A4M03641
(x1) 27 3/8"x24 1/8"x1 1/4" (32x612x696)



T8 TABLETOP PANEL - A4M03625
(x1) 47 7/8"x23 3/8"x1 1/4" (32x593x1216)



T9 TABLETOP PANEL ASSEMBLY - A4M03639
(x1) 47 3/16"x23 3/8"x1 1/4"1 1/4" (32x593x1199)



A16 SINK ASSEMBLY - A4M03143
(x1) 15 1/8"x15 5/16"x16 7/8" (384x389x429)



A4M02290 MAGNETIC PAPER TOWEL HOLDER
(x1)



A4M03025 FULL OVERLAY HINGE
(x14)



A4M03151 GARDEN HOSE ADAPTER
(x1)

OWNER'S MANUAL - PARTS IDENTIFICATION

METAL COMPONENETS (NOT TO SCALE)



9240025 OUTDOOR KITCHEN GRILL KIT
(x1)



9240018 OUTDOOR KITCHEN PIZZA OVEN
(x1)



9240162 OUTDOOR KITCHEN FRIDGE - RIGHT OPEN
(x1)



9205413 ELECTRICAL ENCLOSURE
(x1)

OWNER'S MANUAL - PARTS IDENTIFICATION

HARDWARE COMPONENTS

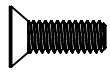

H101185 | PHILLIPS FLAT HEAD
(x84) | 8-32x.5 SCREW

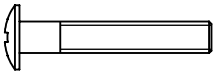

H101287 | PAN HEAD SCREW
(x6) | 8-32x1" SS

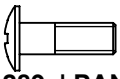

H101289 | PAN HEAD SCREW
(x64) | 8-32x1/2" SS

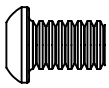

H101292 | TORX PAN HEAD
(x30) | 1/4-20x13/32"



H101293 | TORX PAN HEAD
(x5) | 1/4-20x1 3/8"

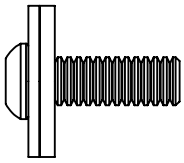

H101202 | TORX PAN HEAD
(x498) | 1/4-20x3/4 ASSY

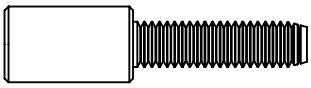

H101132 | TORX SOCKET SCREW SHORT
(x50) | 1/4-20

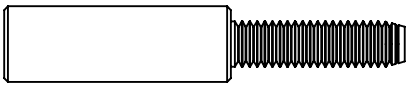

H101103 | TORX SOCKET SCREW
(x125) |

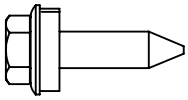

H101117 | SCREW WOODGRIP
(x140) | 10-16x3/4

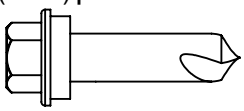

H101116 | SCREW SELF TAPPING
(x40) | 1/4x1 BLK

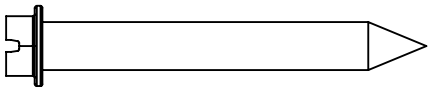

H100120 | CONCRETE ANCHOR
(x8) |

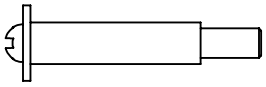

H101307 | SHOULD BOLT
(x22) | 8-32x30mm SS

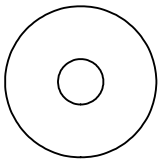

H101054 | SEALANT WASHER
(x34) |

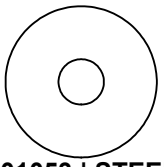

H101053 | STEEL WASHER
(x34) | 6x20

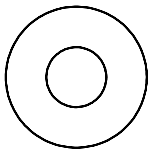

H100630 | WASHER FLAT
(x8) | 8x19 BLK

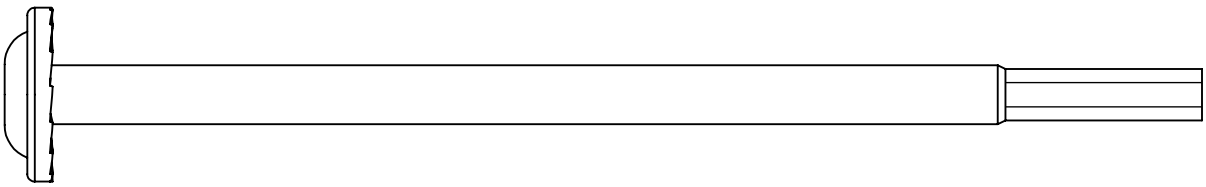

H101230 | BOLT WH 5/16x6 S.S.
(x2) |

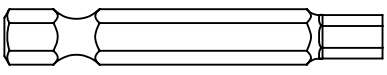

H101294 | HEX DRIVER
(x1)

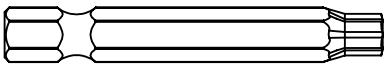

H100147 | TORX BIT
(x1) T-30

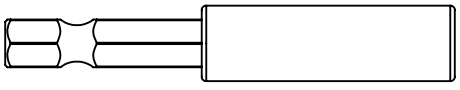

H101100 | MAGNETIC DRIVER
(x1)

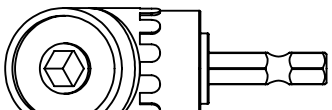

H101114 | RIGHT ANGLE DRILL ADAPTER
(x1) |

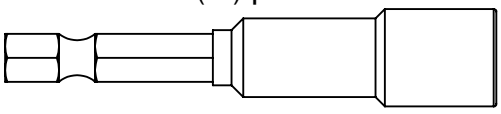

H101106 | SOCKET DRIVER
(x1) |

H100114 | TORX WRENCH
(x1) | T-30

PRE-ASSEMBLY STEP 1 - SORTING PARTS

It is critical for ease of assembly that you take the time to sort and organize the metal and hardware.

METAL PARTS:

- **Organize metal parts by the three-digit, alpha-numeric part label on each bag (ex. A01).**
- **If there are multiple parts with the same part label, stack those pieces together.**
- **Part labels can be found on the bags of the parts.**
- **Keep parts in bags until required step.**
- **Allow yourself plenty of room - the metal pieces can take up a significant amount of space.**

NOTE: CARTONS ARE NOT ORGANIZED BY PART OR STEP NUMBER.

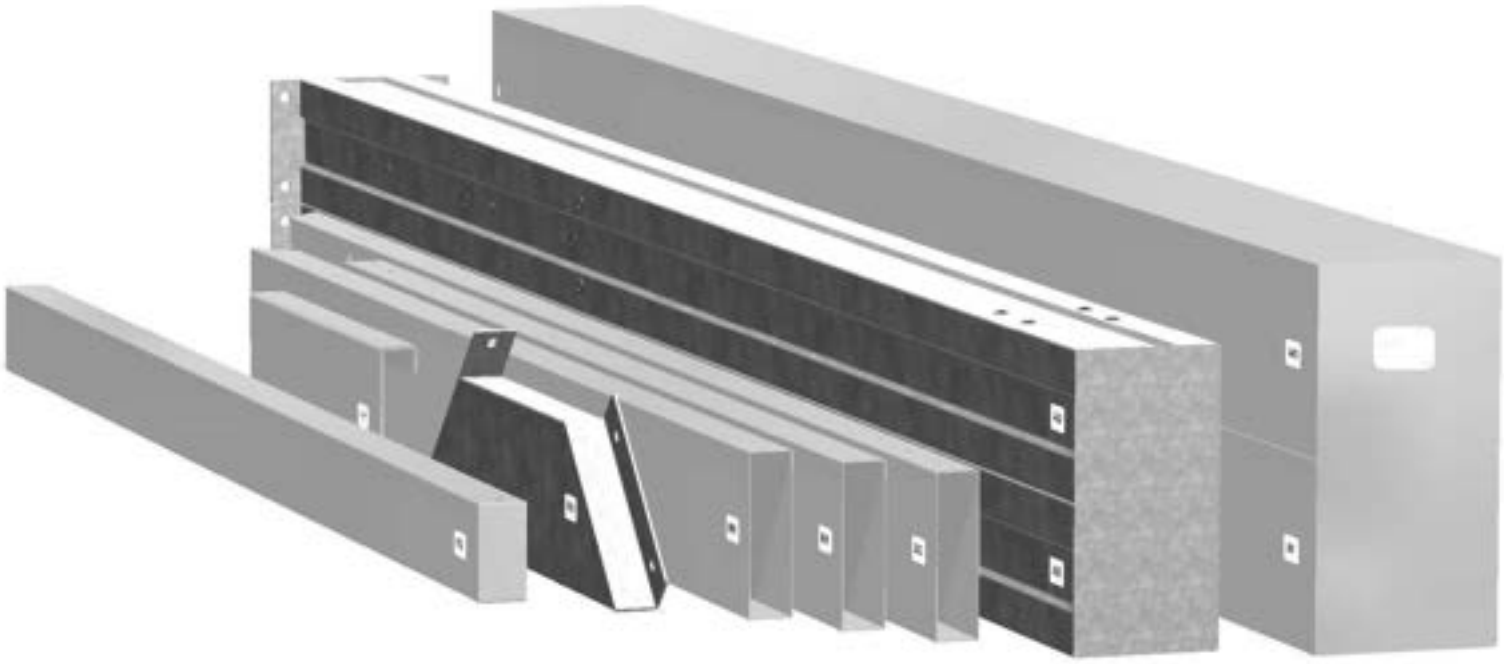

HARDWARE PARTS:

- **We recommend that you have a separate table to organize the hardware.**
- **Hardware bags are printed with a seven-digit, alpha-numeric part number.**
- **You can organize your hardware by part number or group by hardware type (e.g. bolts, nuts, etc.).**
- **During assembly you only need to reference the last four digits of the number.**



PRE-ASSEMBLY STEP 2 - TOOLS REQUIRED



Cordless Drill
or Electric Drill



Drill
Attachments:
Phillips Head



1/8", 3/16", 3/8" &
7/16" Drill Bits



Phillips Screw Driver



Open End
Wrenches
1/2" & 9/16"



3/8" Drive Ratchet, 1/2" &
7/16" STD Sockets 1/2" & 7/16"
Deep Sockets



Claw Hammer



Rubber Mallet
- Optional



Tape Measure

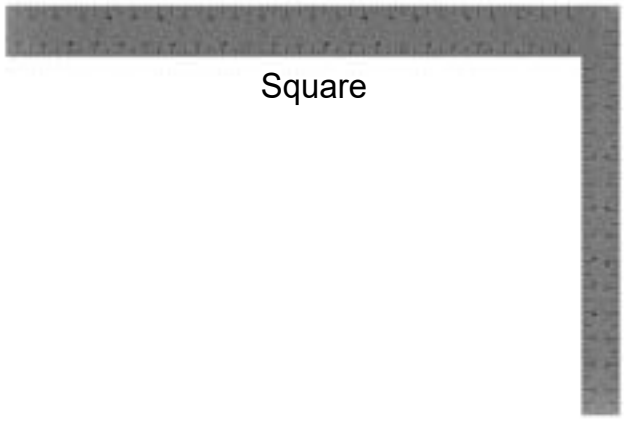

Square



Level 24"

PRE-ASSEMBLY STEP 3 - CHOOSE YOUR ASSEMBLY METHOD

There are several types of assembly instructions available to you.

1. Printed Assembly Manual included with your set
2. BILT APP - 3D interactive instructions
3. Combination of the Printed Manual and BILT APP (Note: Step numbers can differ between the two methods)



STEP 1 - BEAM ASSEMBLY

QTY	PartNo	DESCRIPTION
6	H101202	TORX PAN HEAD 1/4-20x3/4 ASSY



B04 FRONT BEAM ASSEMBLY - A4M03510
(x1) 78 3/16"x5 1/4"x1 7/16" (36x134x1986)



J1 SPLICE BRACKET - A4M02230
(x1) 1 5/16"x5 3/16"x39 3/8" (33.2x131.2x1000)

- FOR EASE OF ASSEMBLY, WE RECOMMEND USING SAW HORSES FOR STEPS 1 - 12.

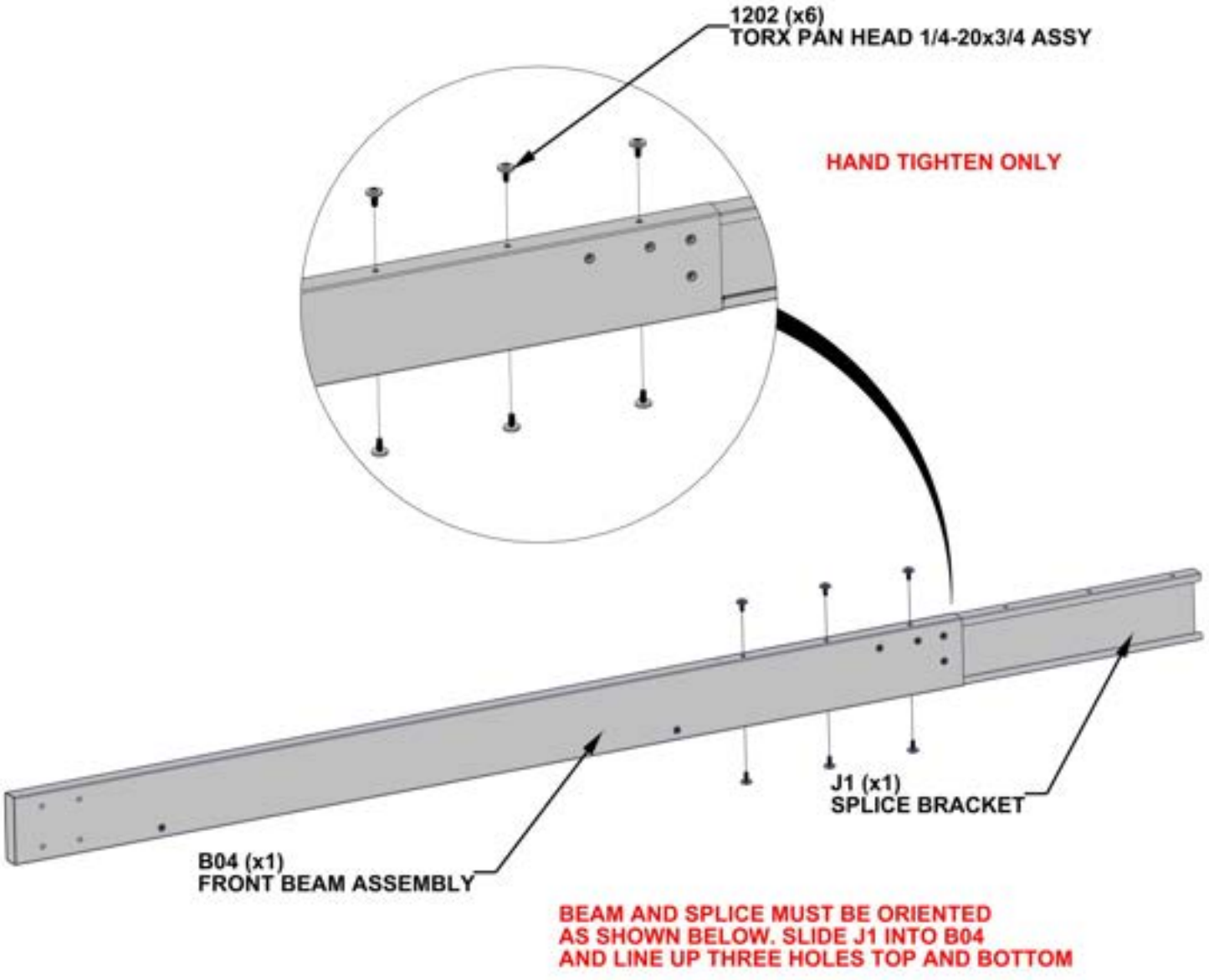

BEAM AND SPLICE MUST BE ORIENTED AS SHOWN BELOW. SLIDE J1 INTO B04 AND LINE UP THREE HOLES TOP AND BOTTOM

STEP 2 - BEAM ASSEMBLY

QTY	PartNo	DESCRIPTION
6	H101202	TORX PAN HEAD 1/4-20x3/4 ASSY



B03 FRONT BEAM ASSEMBLY - A4M03509
(x1) 78 3/16"x5 1/4"x1 7/16" (36x134x1986)

- SLIDE B03 INTO SPLICE BRACKET.
  GENTLY TAP ENDS OF ASSEMBLY WITH
  RUBBER MALLET UNTIL GAP CLOSES.

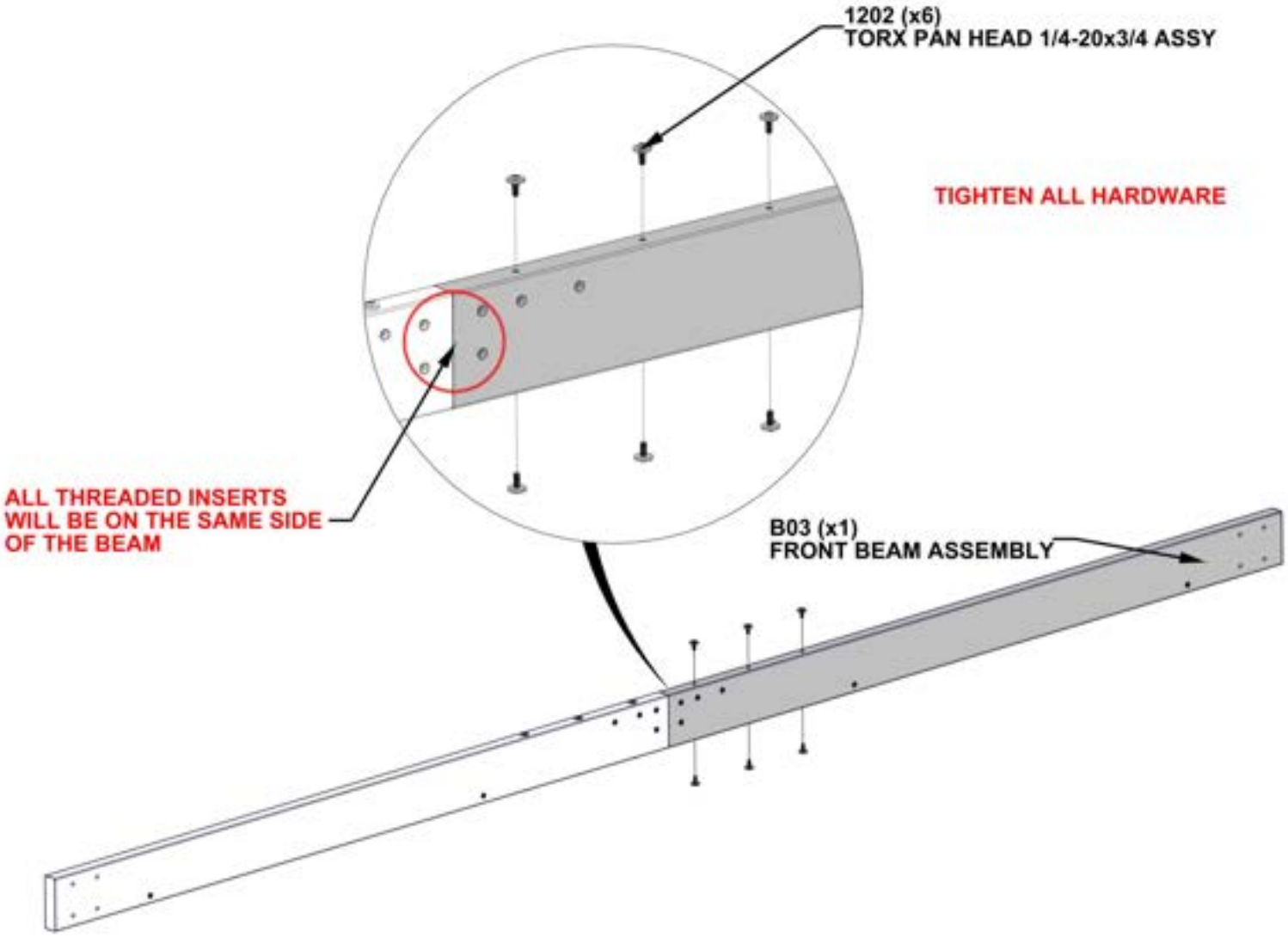

STEP 3 - BEAM ASSEMBLY

QTY	PartNo	DESCRIPTION
6	H101202	TORX PAN HEAD 1/4-20x3/4 ASSY



B06 FRONT BEAM ASSEMBLY - A4M03512
(x1) 72"x5 1/4"x1 7/16" (36x134x1829)

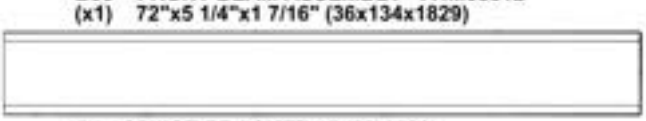

J1 SPLICE BRACKET - A4M02230
(x1) 1 5/16"x5 3/16"x39 3/8" (33.2x131.2x1000)

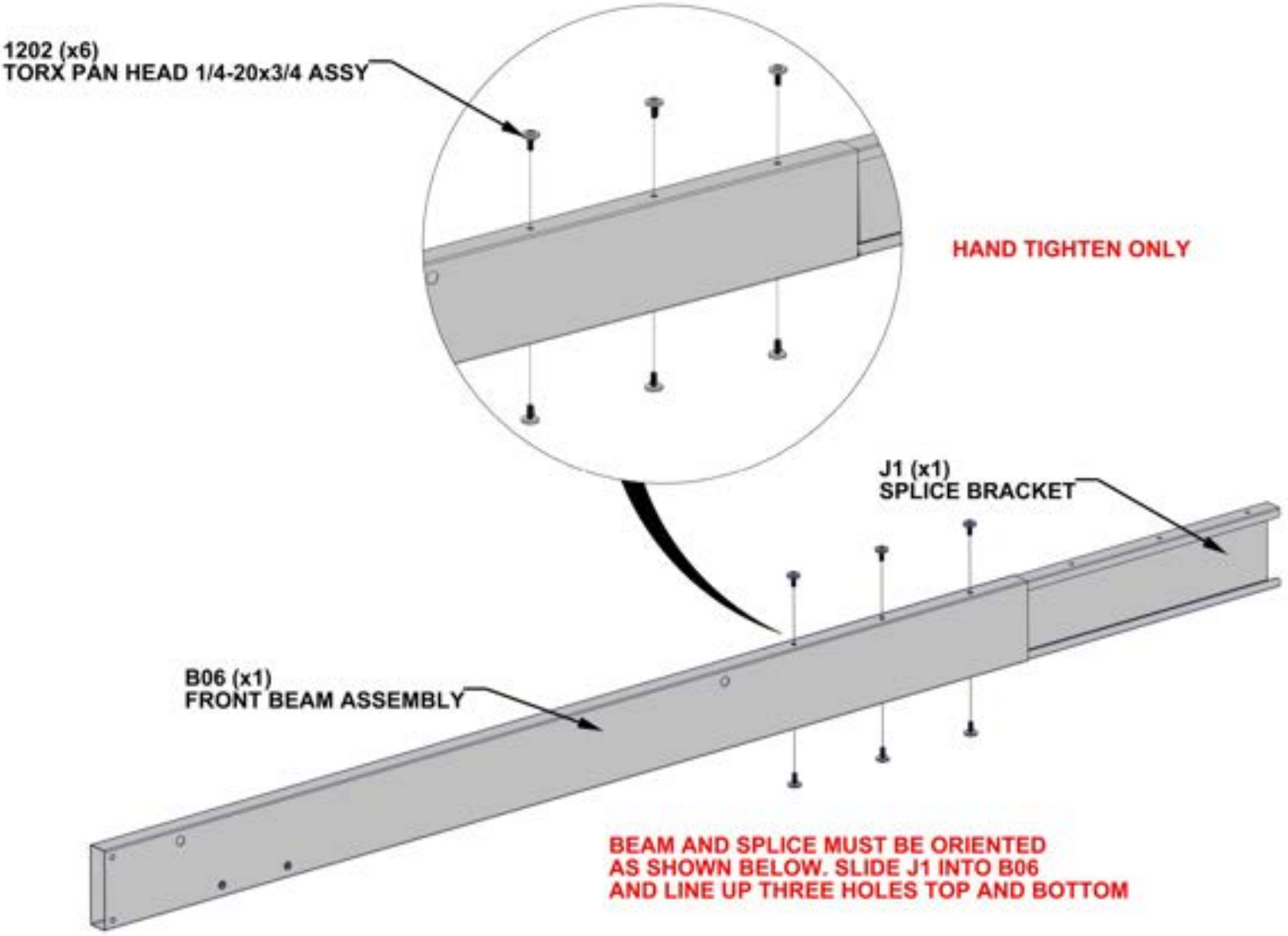

STEP 4 - BEAM ASSEMBLY

QTY	PartNo	DESCRIPTION
6	H101202	TORX PAN HEAD 1/4-20x3/4 ASSY



B05 FRONT BEAM ASSEMBLY - A4M03511
(x1) 72"x5 1/4"x1 7/16" (36x134x1829)

- SLIDE B05 INTO SPLICE BRACKET. GENTLY TAP ENDS OF ASSEMBLY WITH RUBBER MALLET UNTIL GAP CLOSES.

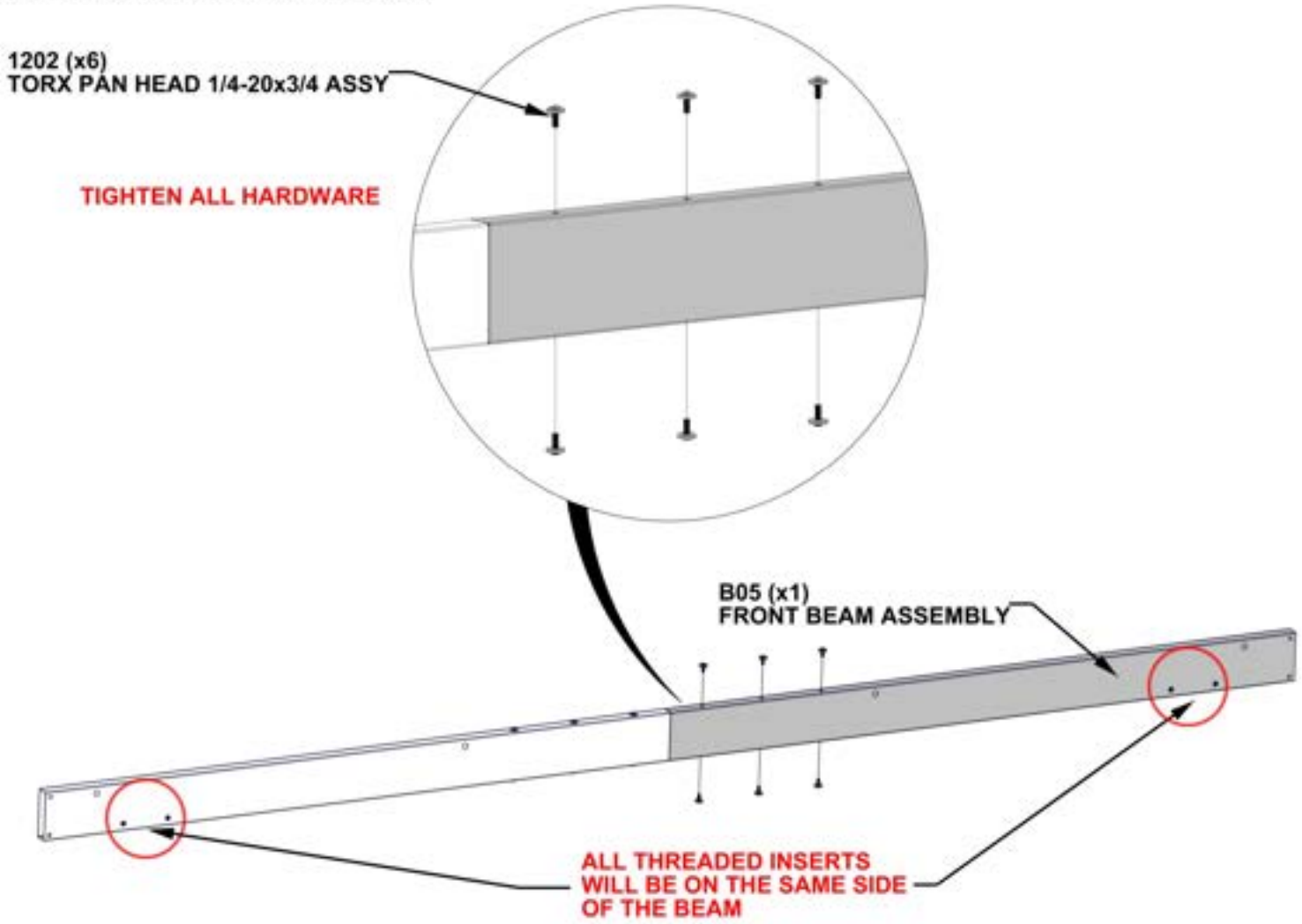

STEP 5 - BEAM ASSEMBLY

QTY	PartNo	DESCRIPTION
4	H101103	TORX SOCKET SCREW 1/4-20

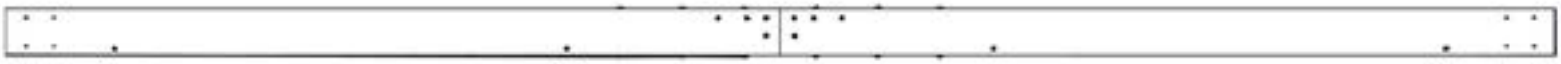

UPPER BEAM ASSEMBLY STEPS 1 - 2

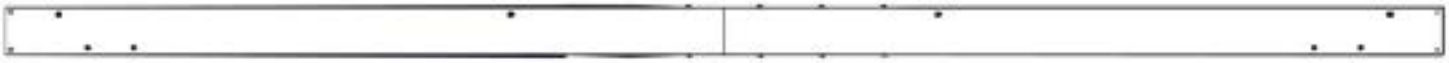

LOWER BEAM ASSEMBLY STEPS 3 - 4

- ALIGN THRU HOLES IN LOWER BEAM ASSEMBLY
  WITH THREADED INSERTS IN UPPER BEAM ASSEMBLY

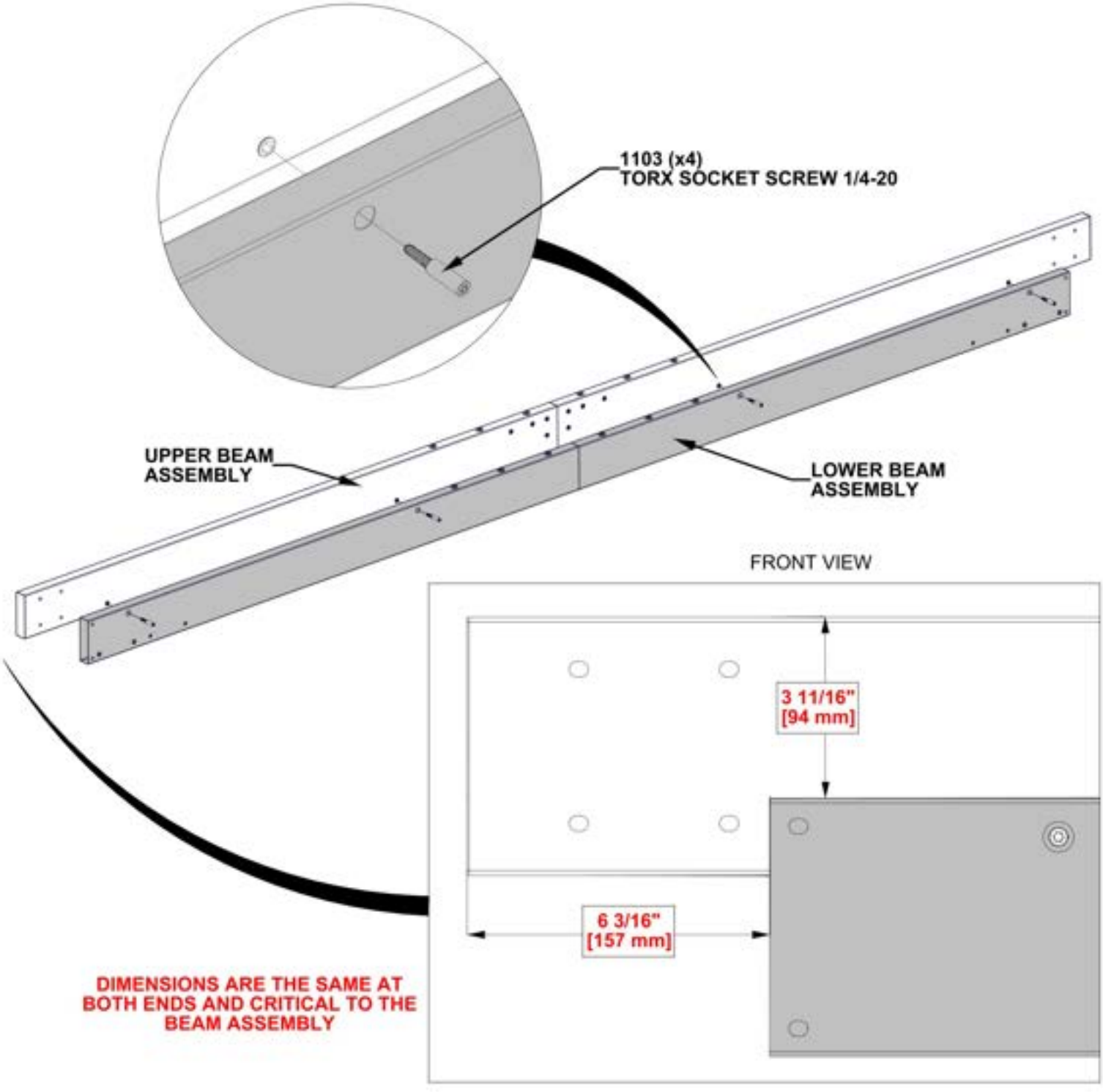

DIMENSIONS ARE THE SAME AT BOTH ENDS AND CRITICAL TO THE BEAM ASSEMBLY

REPEAT BEAM ASSEMBLY STEPS 1 THROUGH 5

STEP 6 - POST ASSEMBLY

QTY	PartNo	DESCRIPTION
4	H101202	TORX PAN HEAD 1/4-20x3/4 ASSY

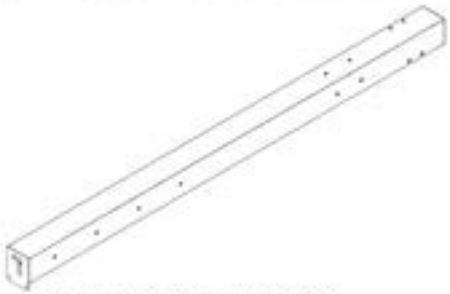

P03 BACK POST - A4M03505
(x1) 89 9/16"x6 1/8"x4 3/4" (120x155x2275)



J4 BEAM BRACKET - A4M02990
(x2) 1"x1 5/16"x5 1/16" (25x33.2x128)

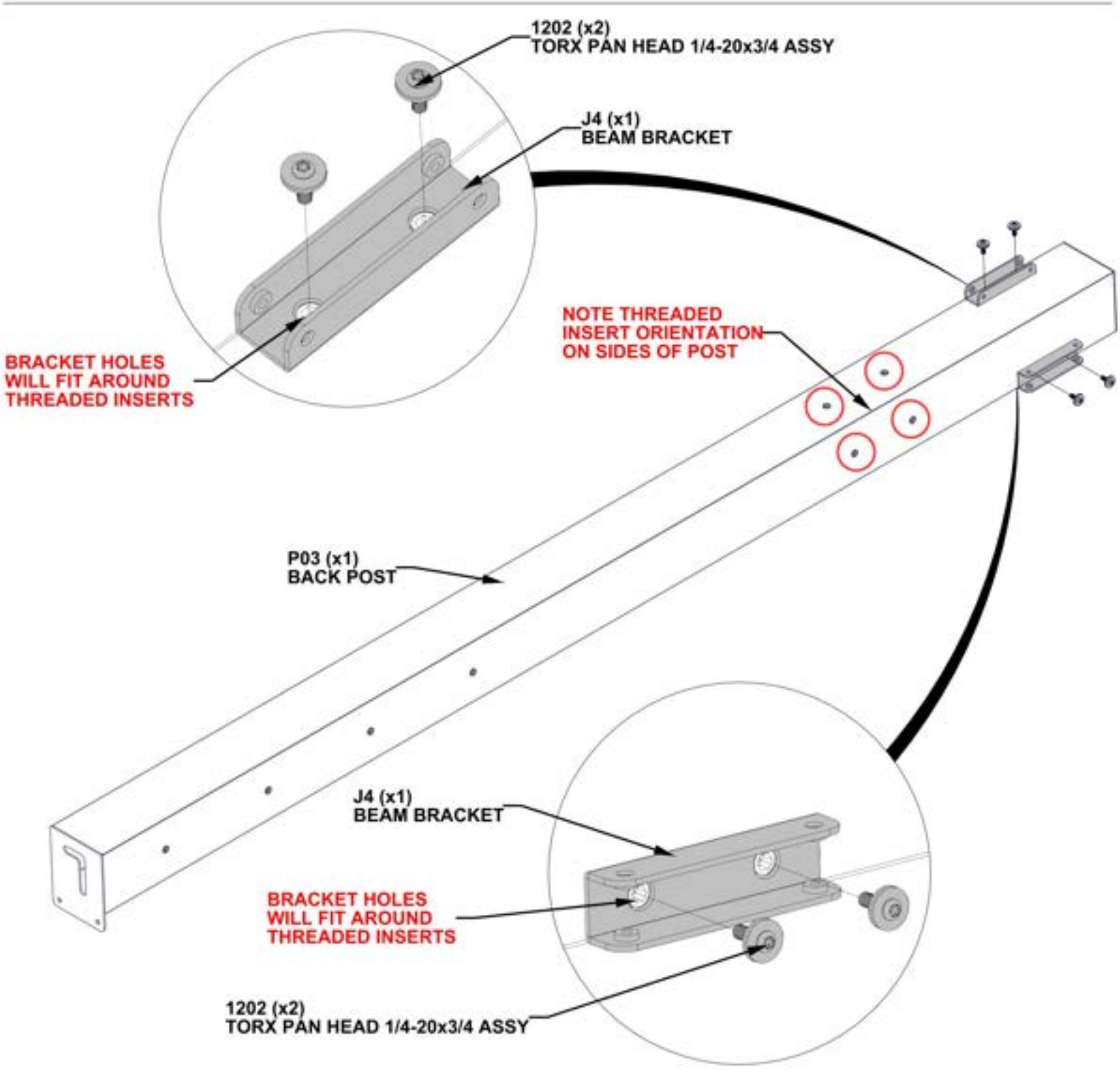

STEP 7 - POST ASSEMBLY

QTY	PartNo	DESCRIPTION
4	H101202	TORX PAN HEAD 1/4-20x3/4 ASSY



P04 BACK POST - A4M03506
(x1) 89 9/16"x6 1/8"x4 3/4" (120x155x2275)



J4 BEAM BRACKET - A4M02990
(x2) 1"x1 5/16"x5 1/16" (25x33.2x128)

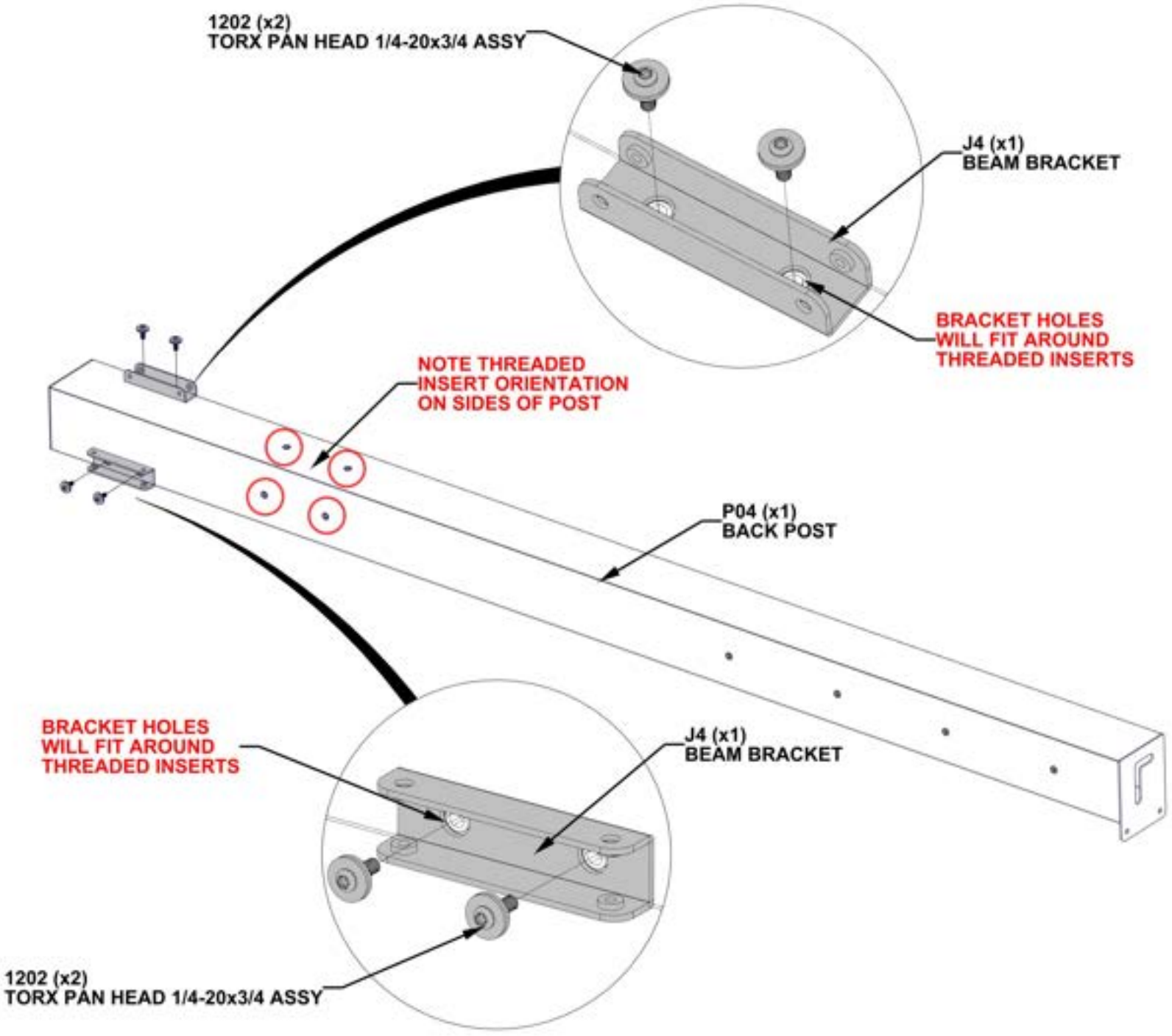

STEP 8A - FRAME ASSEMBLY

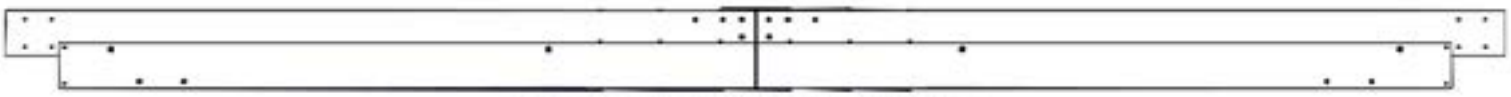

BEAM ASSEMBLY FROM STEPS 1 - 5

- SLIDE EACH POST ASSEMBLY INTO THE BEAM ASSEMBLY FROM STEPS 1 - 5.

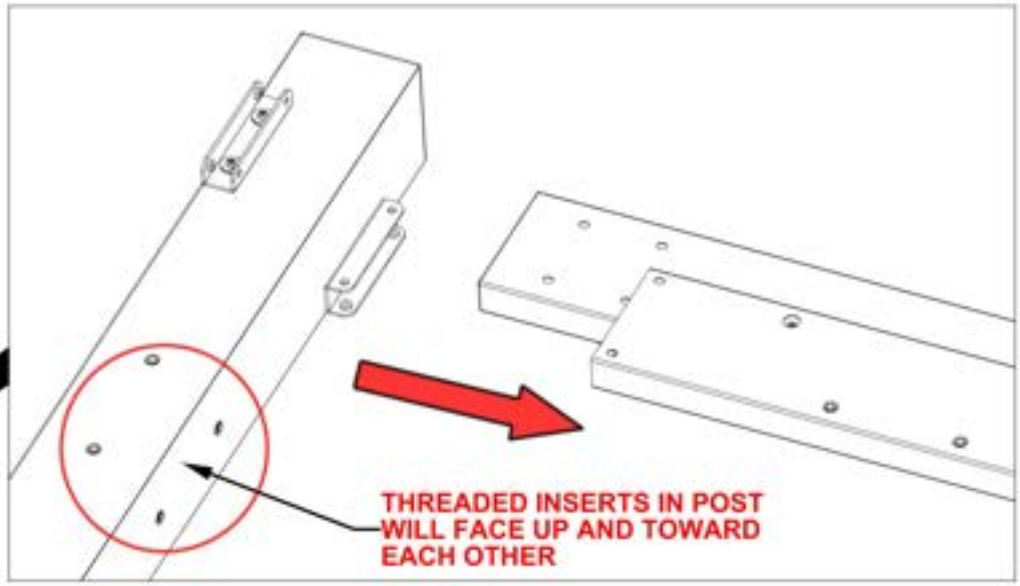

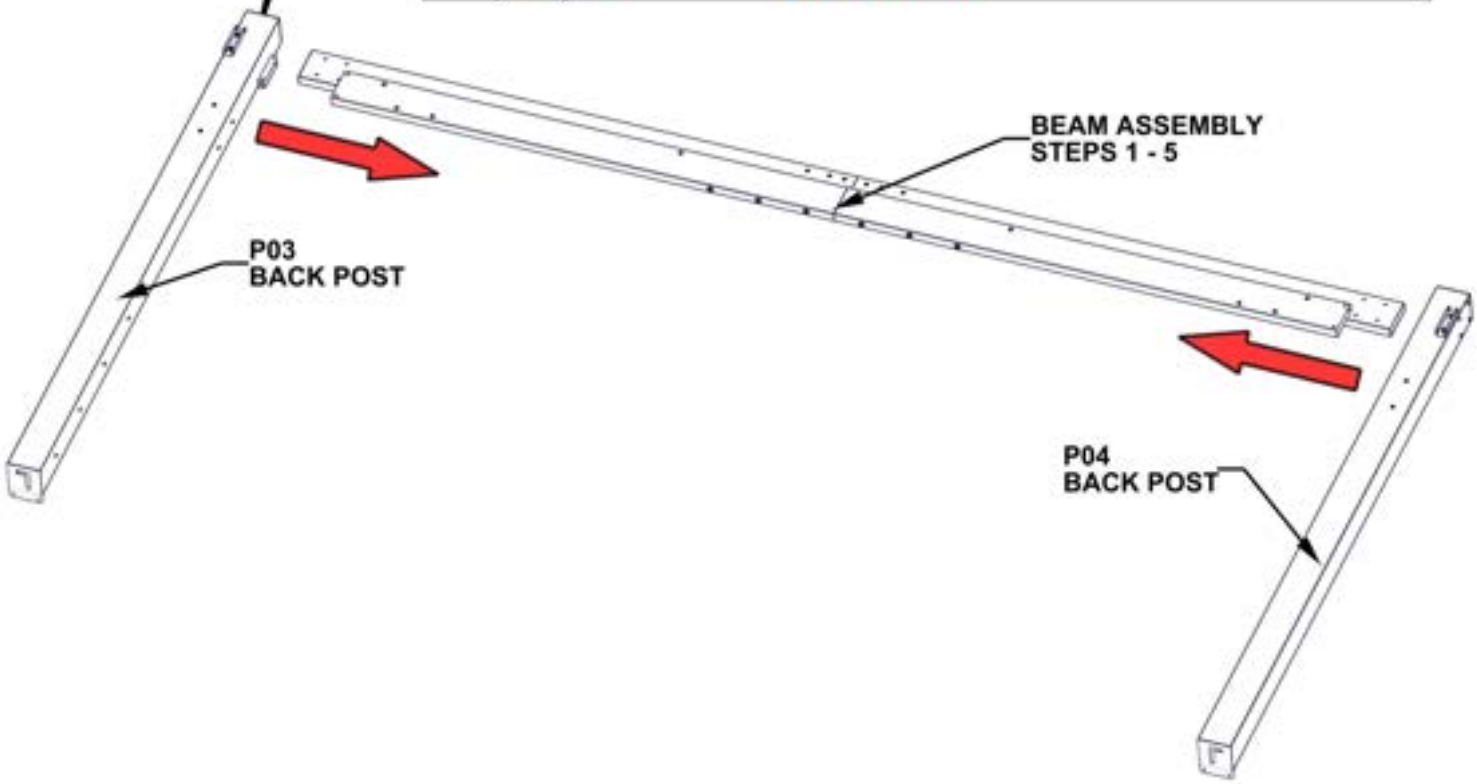

STEP 8B - FRAME ASSEMBLY

QTY	PartNo	DESCRIPTION
4	H101202	TORX PAN HEAD 1/4-20x3/4 ASSY

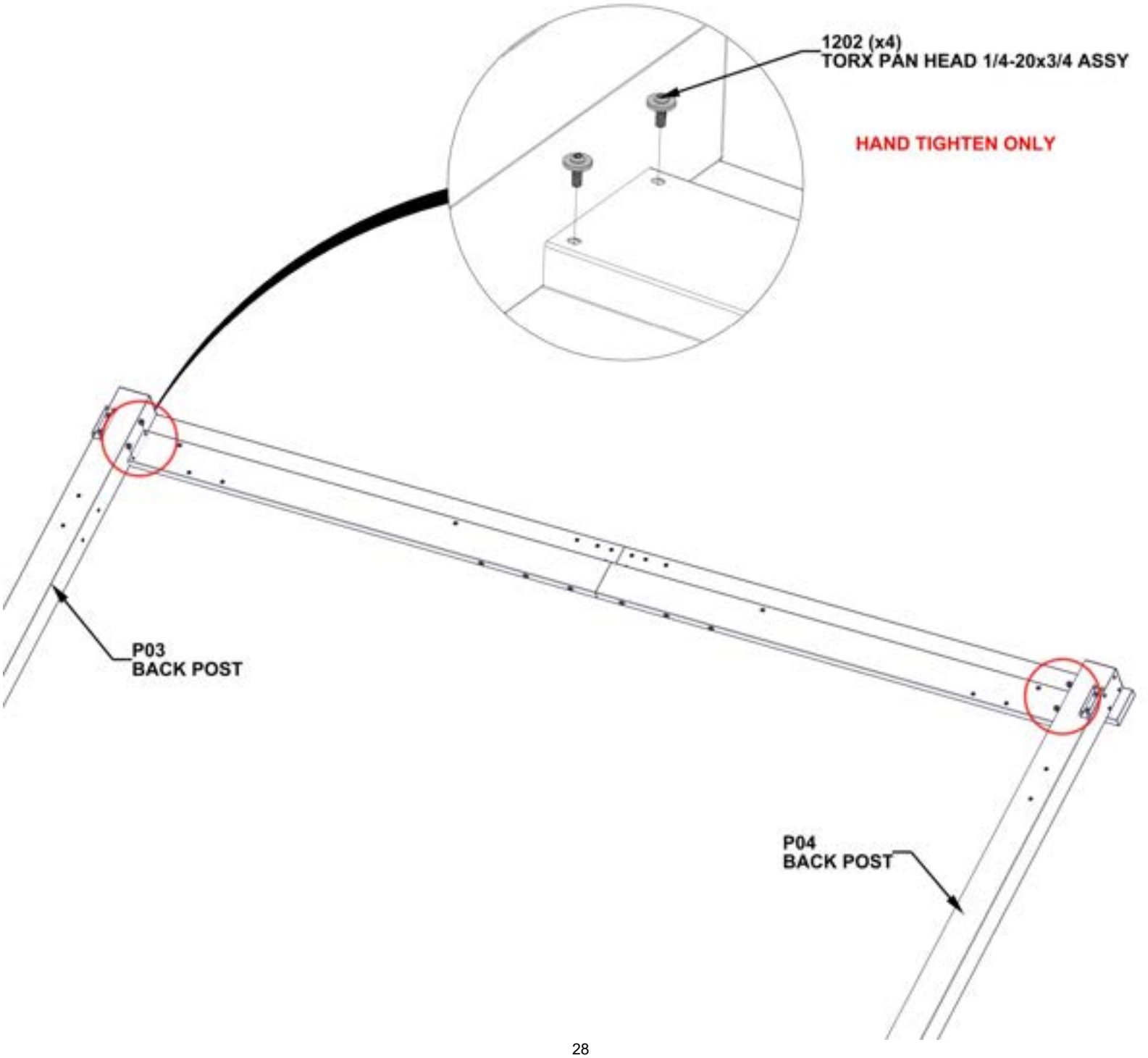

STEP 8C - FRAME ASSEMBLY

QTY	PartNo	DESCRIPTION
8	H101202	TORX PAN HEAD 1/4-20x3/4 ASSY



C01 CORBEL ASSEMBLY - A4M03525
(x1) 21 13/16"x5 1/4"x2 3/4" (70x134x553.5)



C02 CORBEL ASSEMBLY - A4M03526
(x1) 21 13/16"x5 1/4"x2 3/4" (70x134x553.5)

- ATTACH CORBELS TO BEAM AND POST.
- SQUARE AS NEEDED BEFORE TIGHTENING ALL HARDWARE FROM PREVIOUS STEPS.

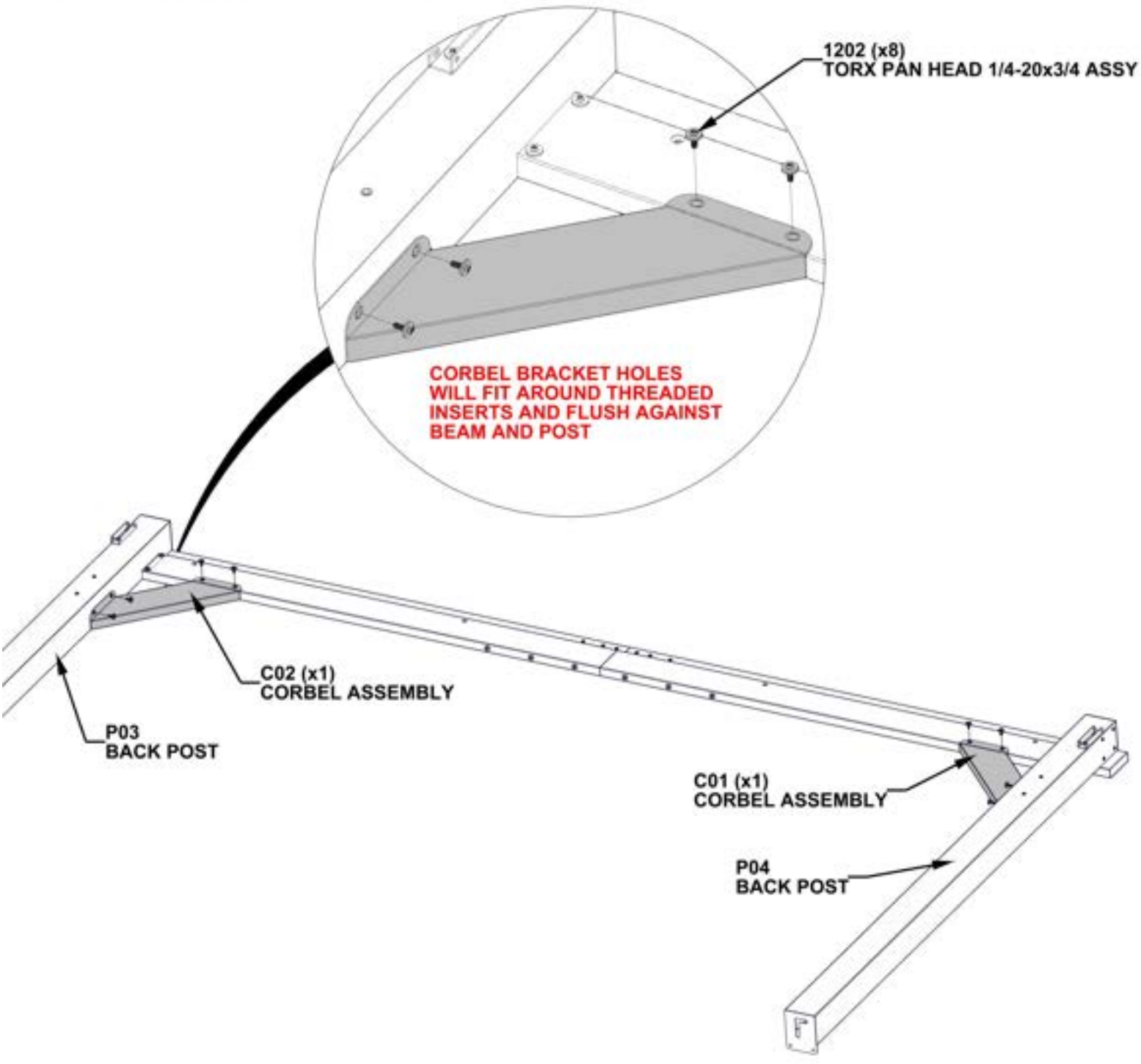

STEP 8D - FRAME ASSEMBLY

QTY	PartNo	DESCRIPTION
8	H101103	TORX SOCKET SCREW 1/4-20

- WITH AN ADDITIONAL PERSON, FLIP POST AND BEAM ASSEMBLY

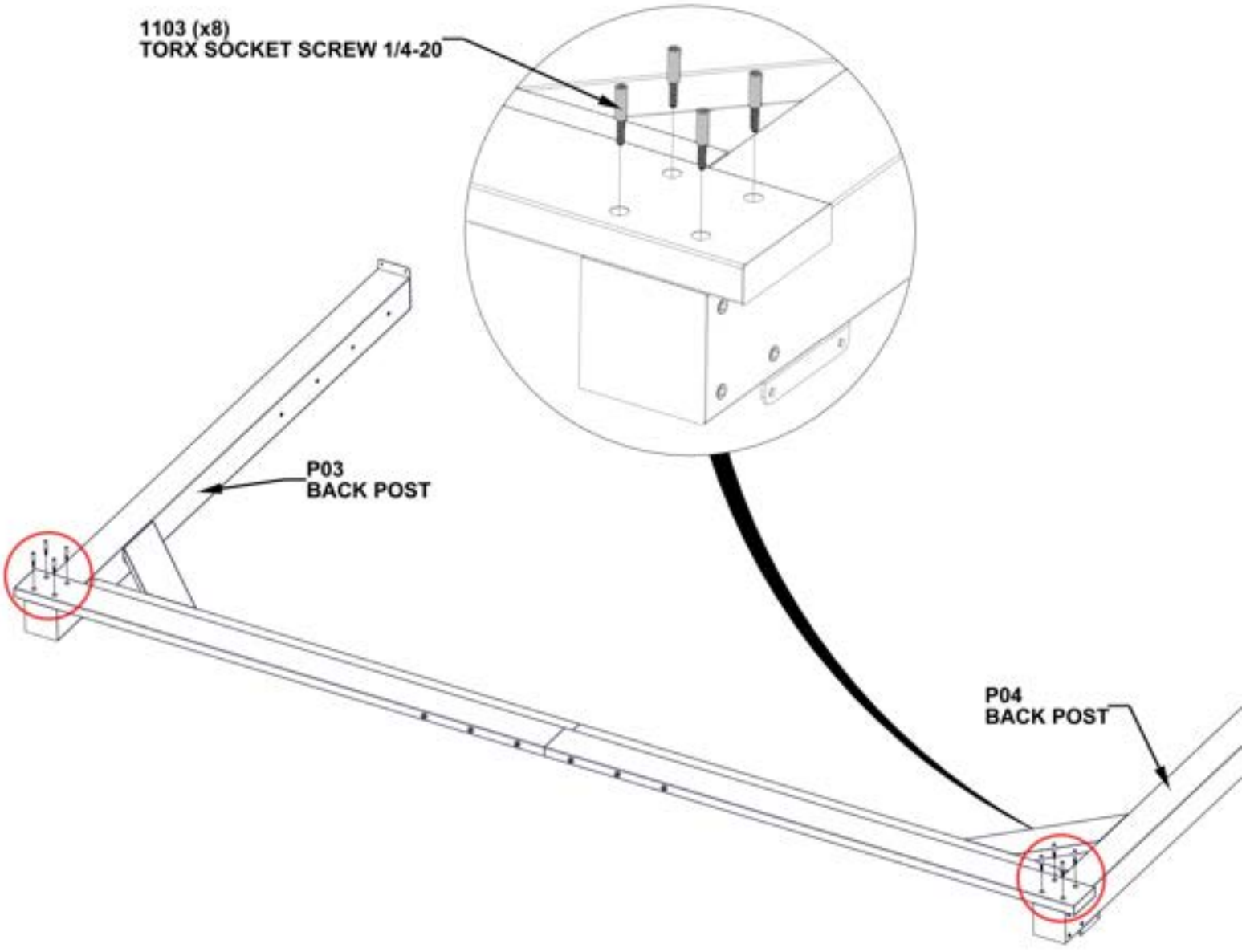

STEP 9 - BEAM ASSEMBLY

QTY	PartNo	DESCRIPTION
3	H101103	TORX SOCKET SCREW 1/4-20



B01 SIDE BEAM ASSEMBLY - A4M03507
(x1) 94 5/16"x5 1/4"x1 7/16" (36x134x2396)

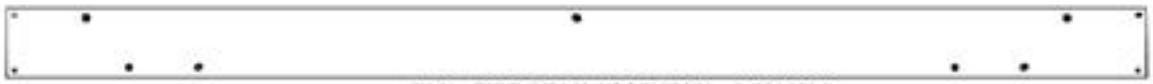

B02 SIDE BEAM ASSEMBLY - A4M03508
(x1) 84 13/16"x5 1/4"x1 7/16" (36x134x2154)

- ALIGN THRU HOLES IN B02 BEAM WITH THREADED INSERTS IN B01 BEAM.

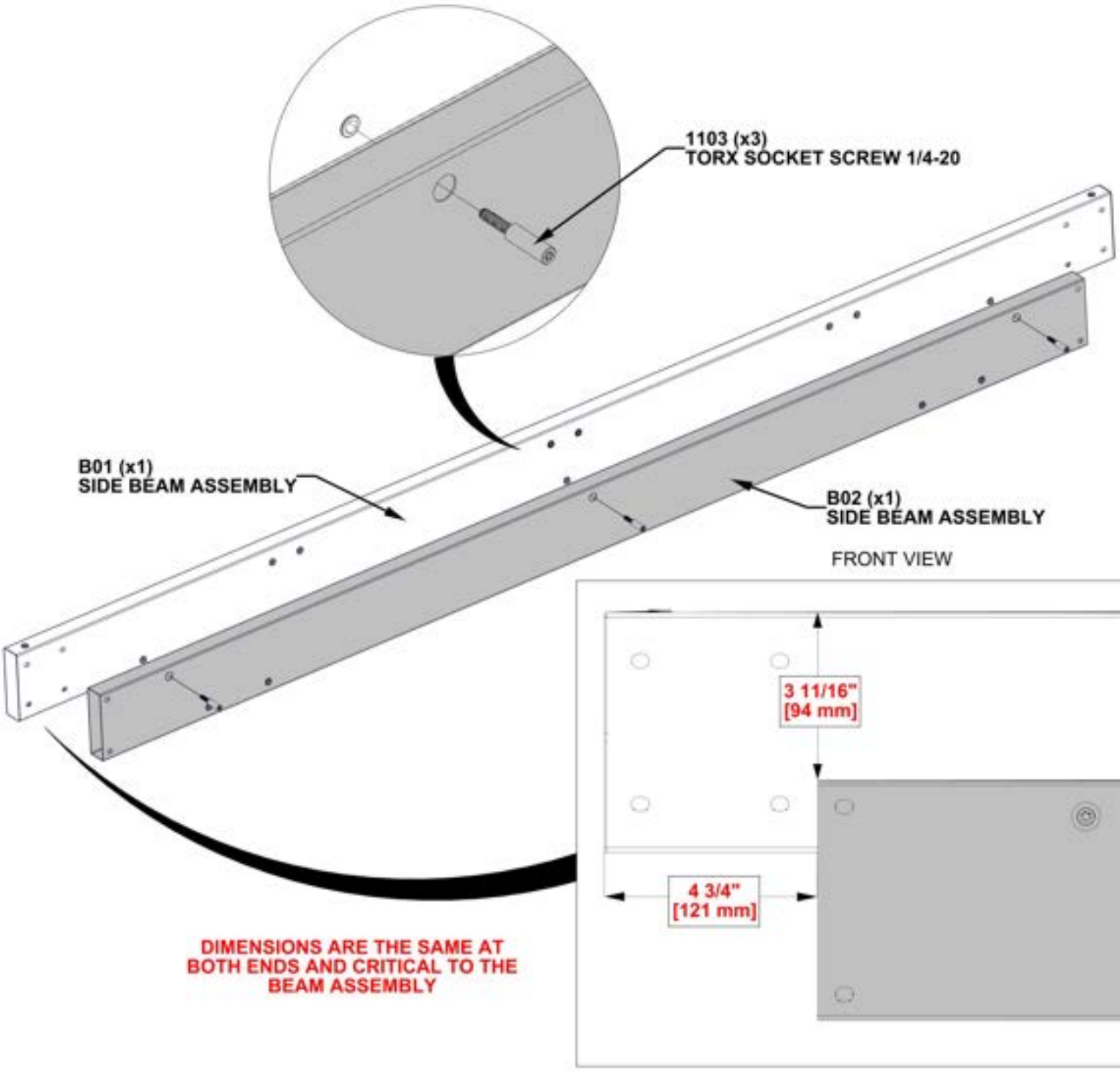

STEP 10 - BEAM ASSEMBLY



J5 RAFTER BRACKET - A4M03803
(x3) 3 5/8"x2 11/16"x2 1/16" (52x68x91.5)

QTY	PartNo	DESCRIPTION
6	H101202	TORX PAN HEAD 1/4-20x3/4 ASSY

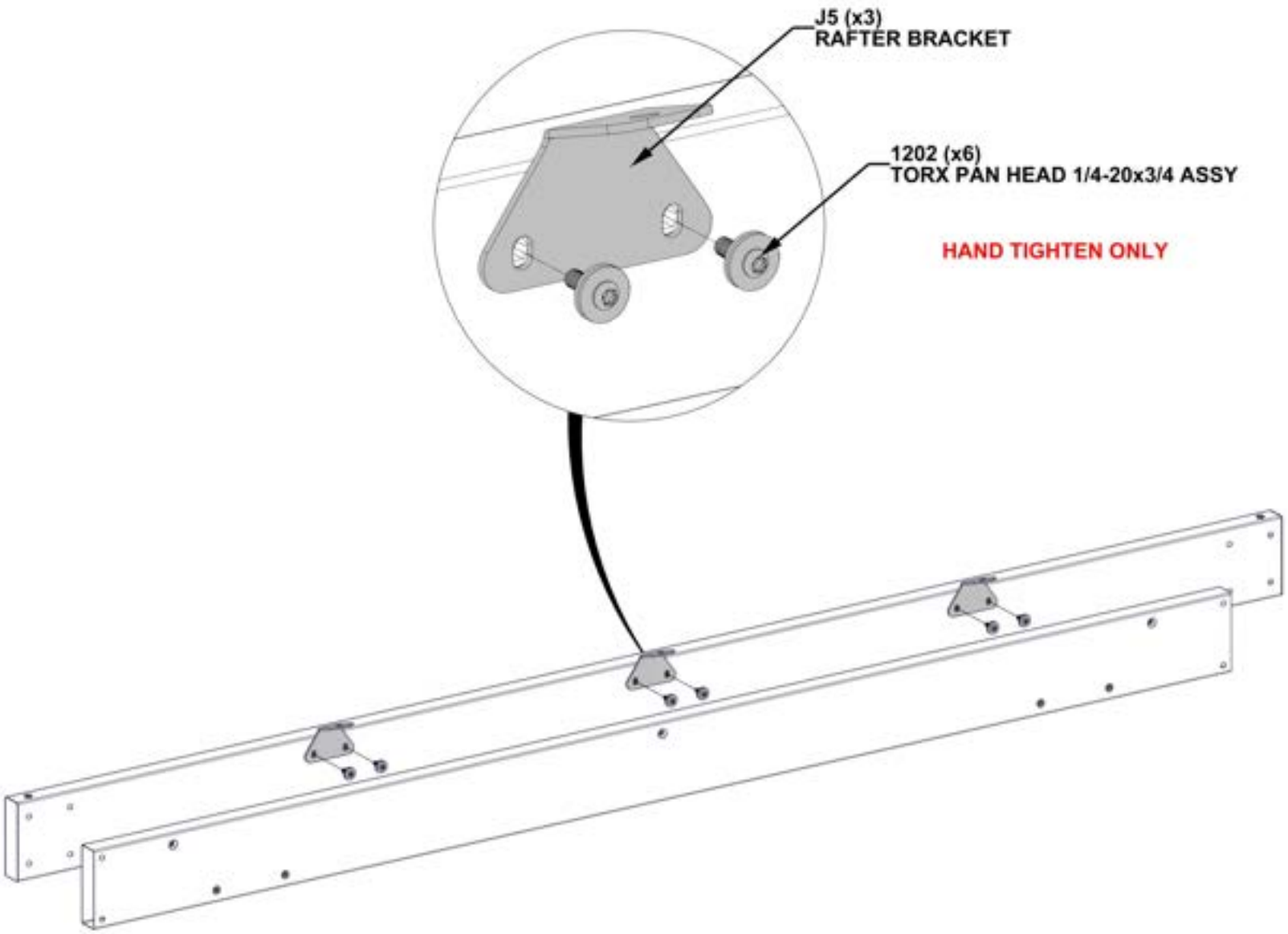

REPEAT BEAM ASSEMBLY STEPS 9 THROUGH 10

STEP 11 - POST ASSEMBLY

QTY	PartNo	DESCRIPTION
4	H101202	TORX PAN HEAD 1/4-20x3/4 ASSY

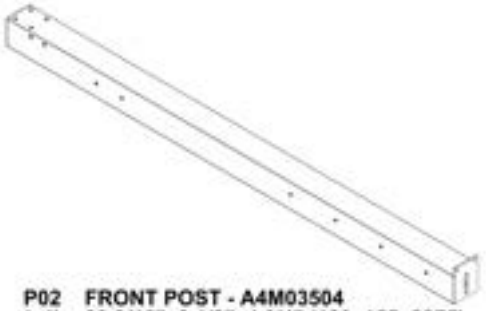

P02 FRONT POST - A4M03504
(x1) 89 9/16"x6 1/8"x4 3/4" (120x155x2275)



J4 BEAM BRACKET - A4M02990
(x2) 1"x1 5/16"x5 1/16" (25x33.2x128)

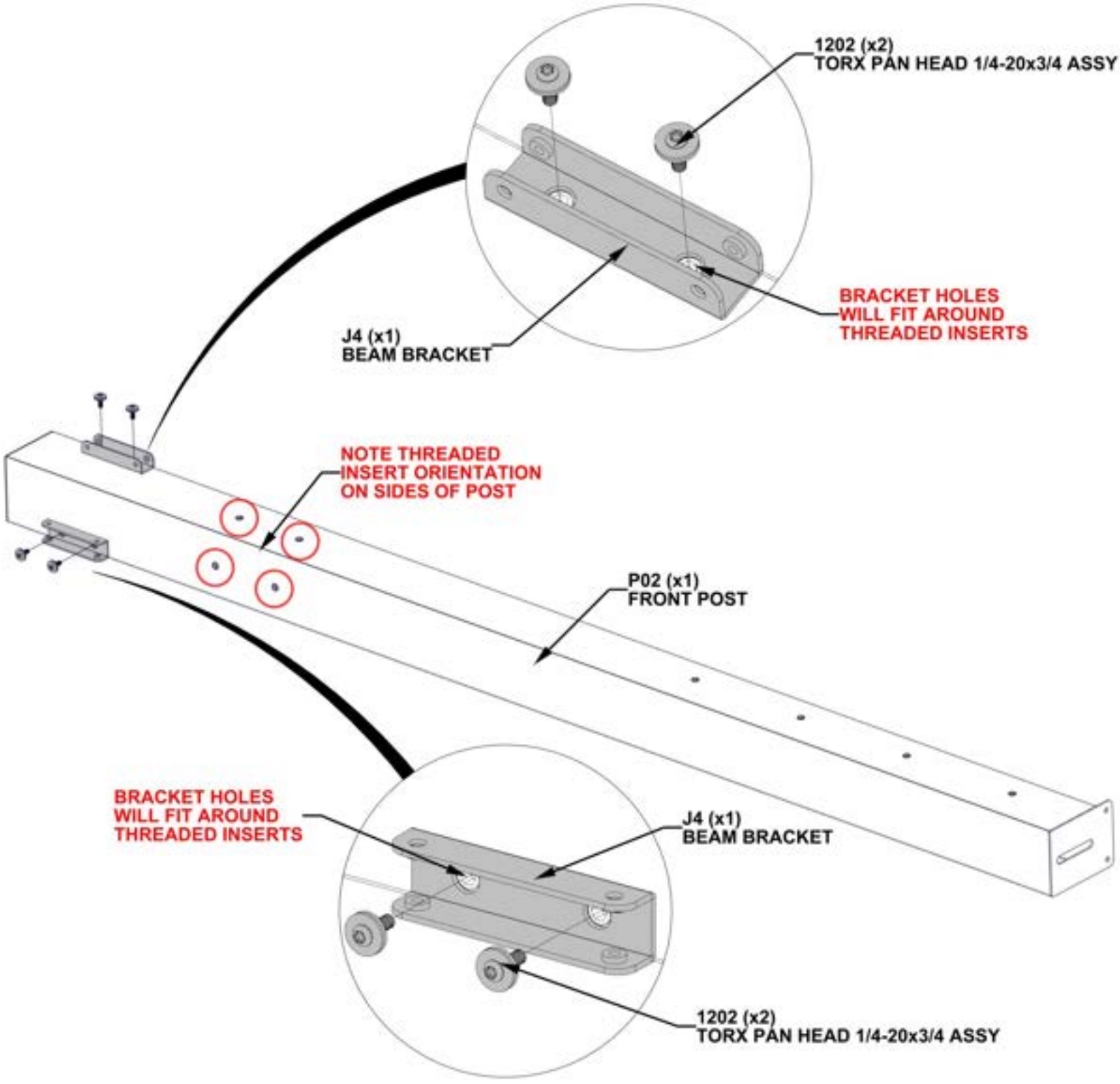

STEP 12A - FRAME ASSEMBLY

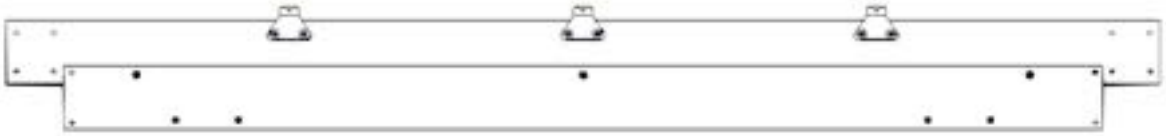

BEAM ASSEMBLY FROM STEPS 9 - 10

- SLIDE POST ASSEMBLY FROM STEP 11
  INTO THE BEAM ASSEMBLY FROM STEPS 9 - 10.

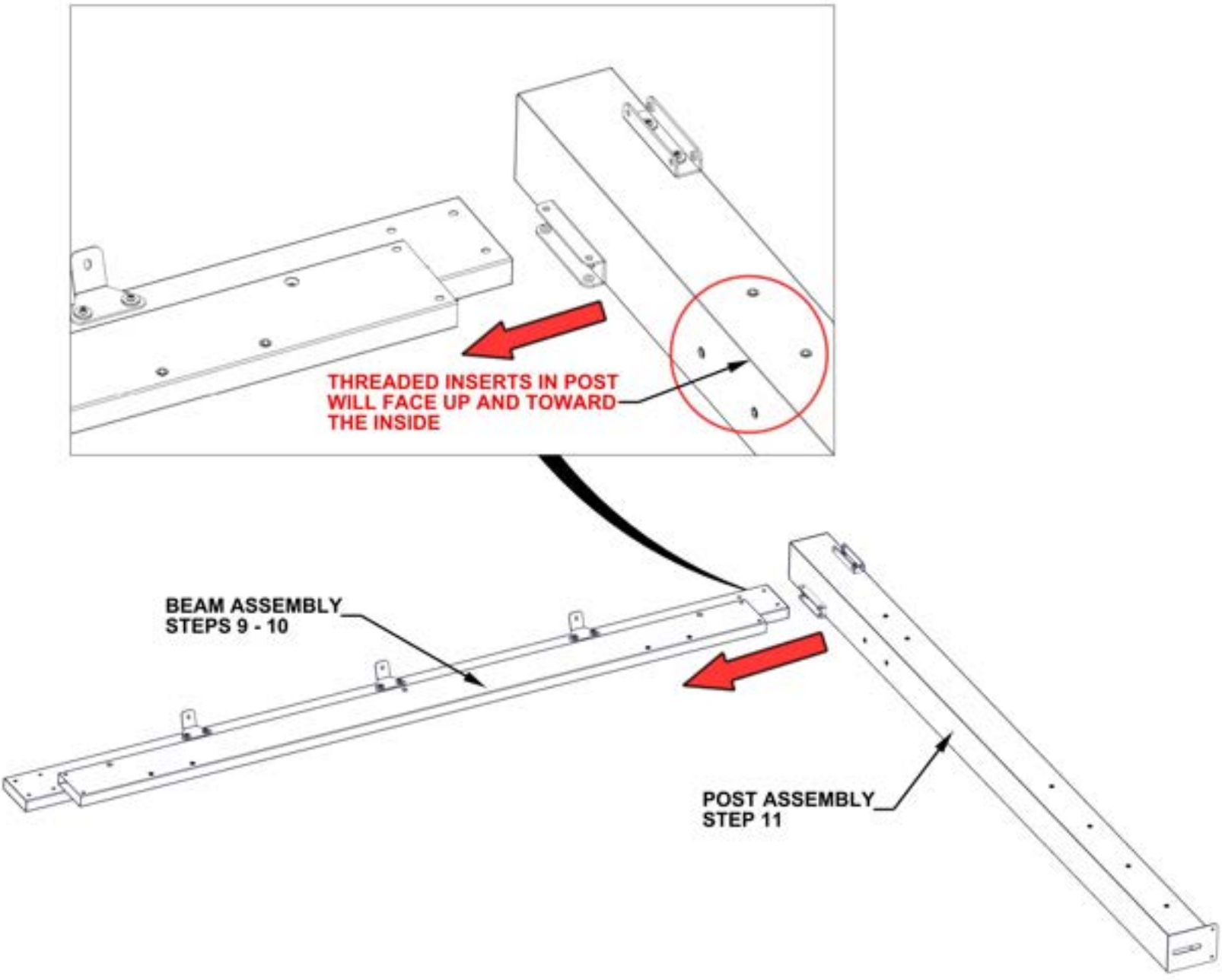

STEP 12B - FRAME ASSEMBLY

QTY	PartNo	DESCRIPTION
2	H101202	TORX PAN HEAD 1/4-20x3/4 ASSY

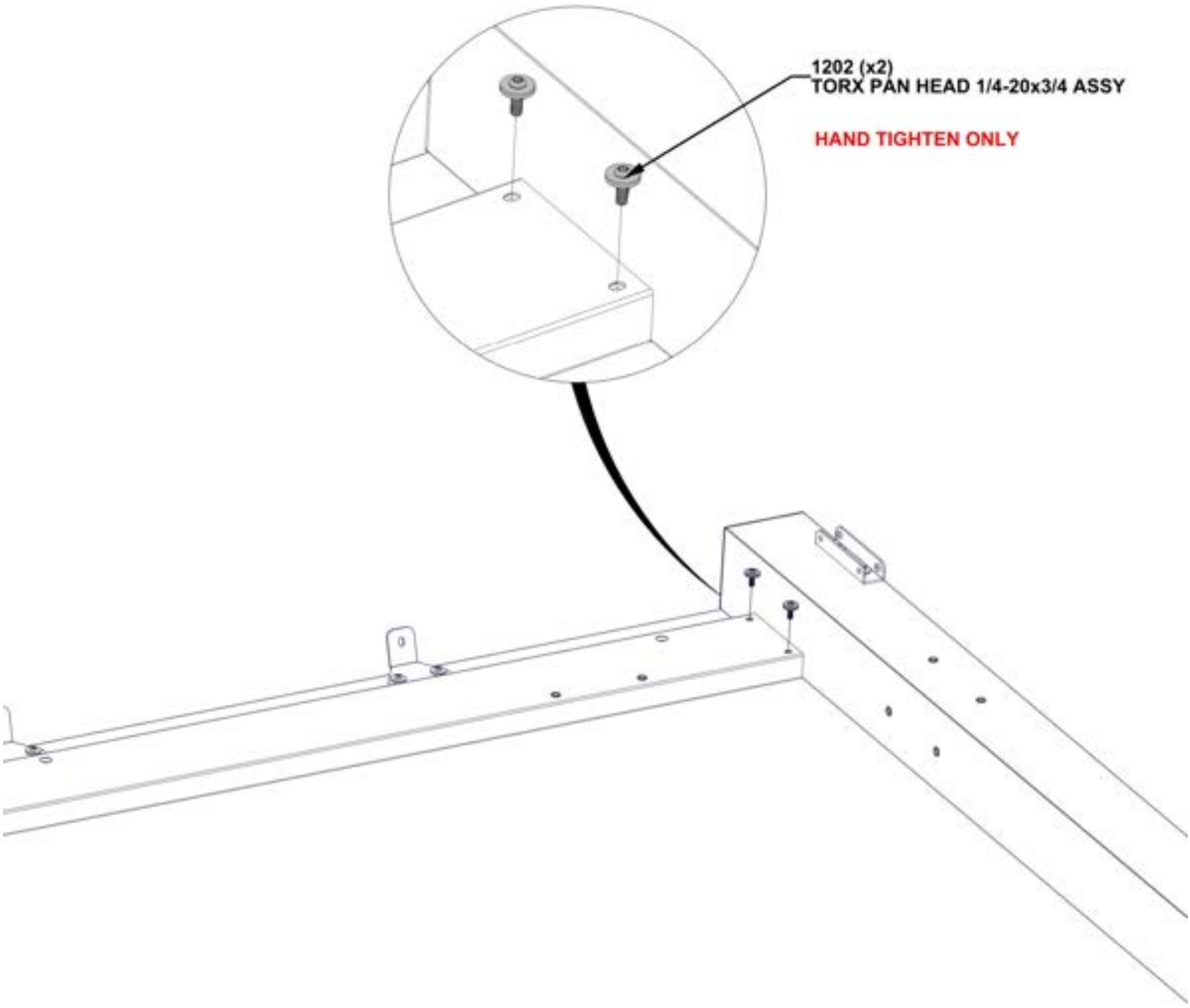

STEP 12C - FRAME ASSEMBLY



C01 CORBEL ASSEMBLY - A4M03525
(x1) 21 13/16"x5 1/4"x2 3/4" (70x134x553.5)

QTY	PartNo	DESCRIPTION
4	H101202	TORX PAN HEAD 1/4-20x3/4 ASSY

- ATTACH CORBEL TO BEAM AND POST.
- SQUARE AS NEEDED BEFORE TIGHTENING ALL HARDWARE FROM PREVIOUS STEPS.

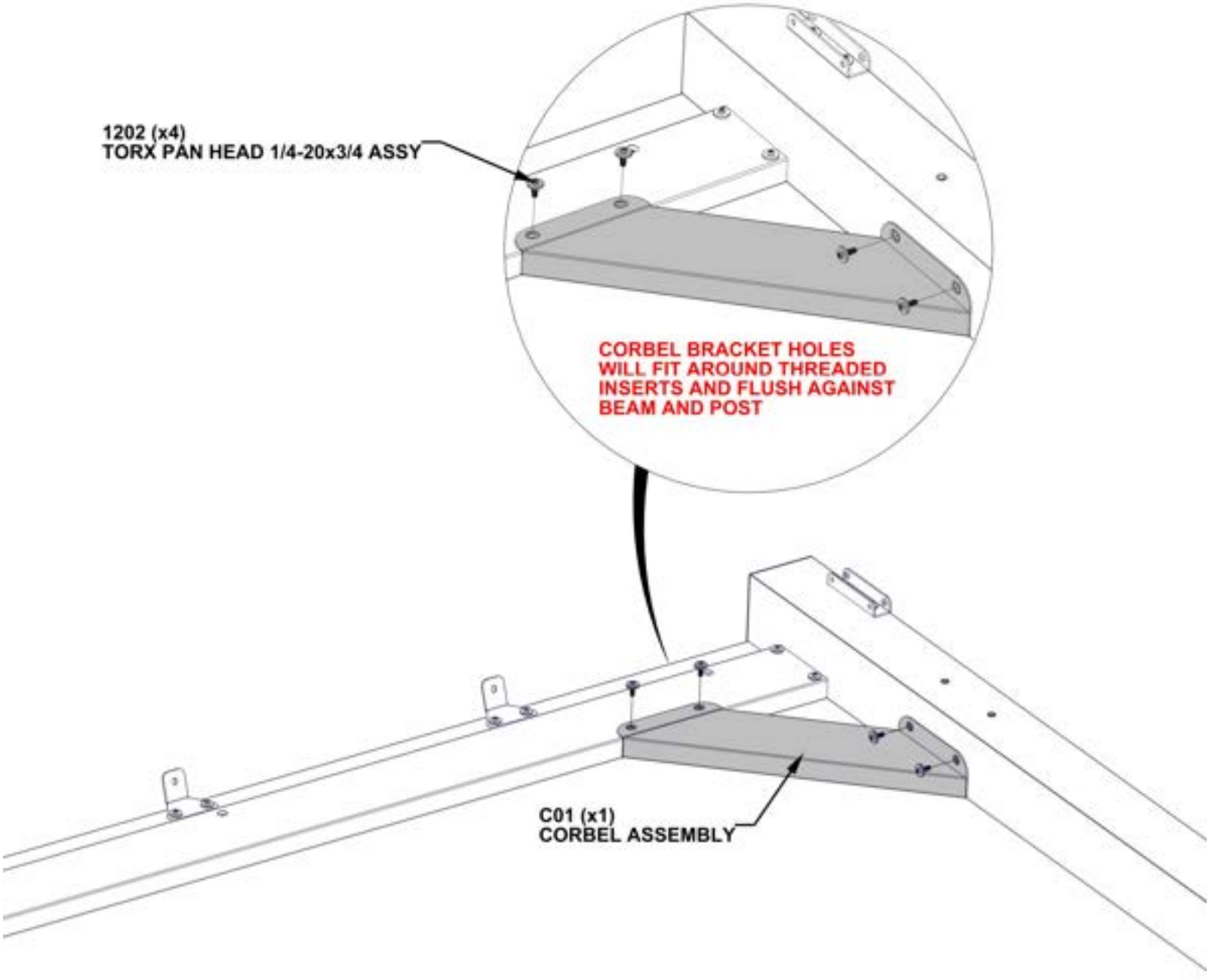

STEP 12D - FRAME ASSEMBLY

QTY	PartNo	DESCRIPTION
4	H101103	TORX SOCKET SCREW 1/4-20

- WITH AN ADDITIONAL PERSON, FLIP POST AND BEAM ASSEMBLY

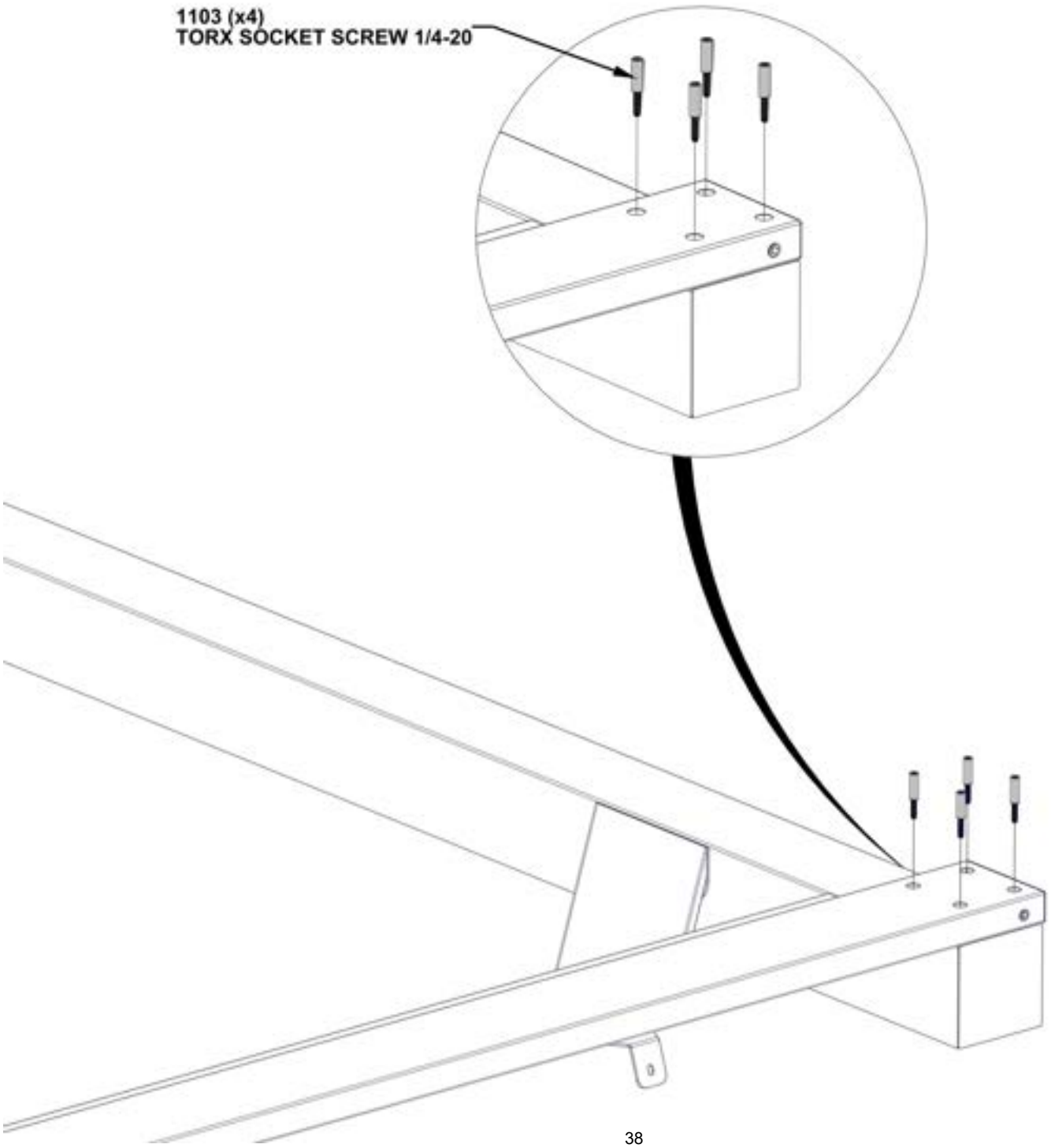

STEP 13A - FRAME ASSEMBLY

- WITH AT LEAST THREE OTHER PEOPLE, ATTACH BEAM AND POST ASSEMBLIES BY SLIDING IN PLACE.

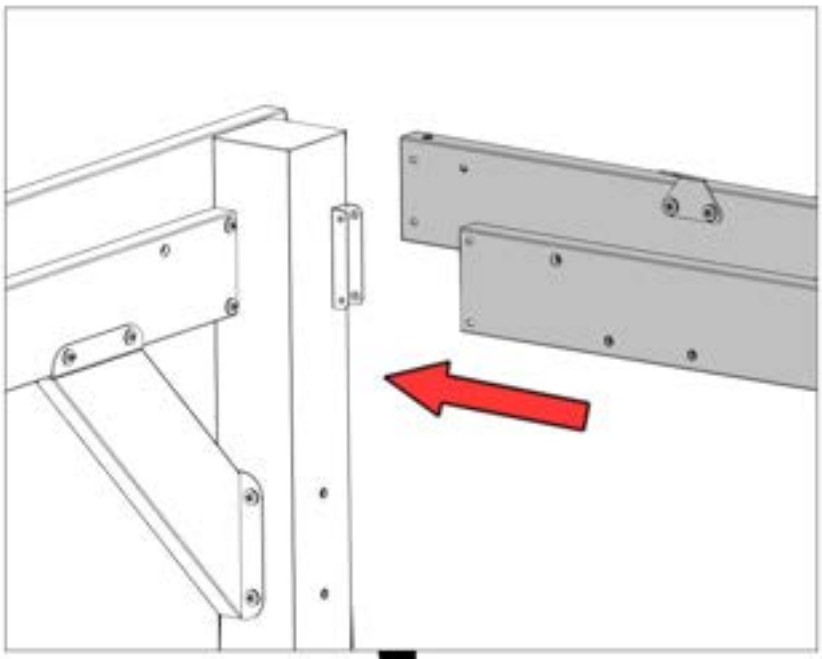

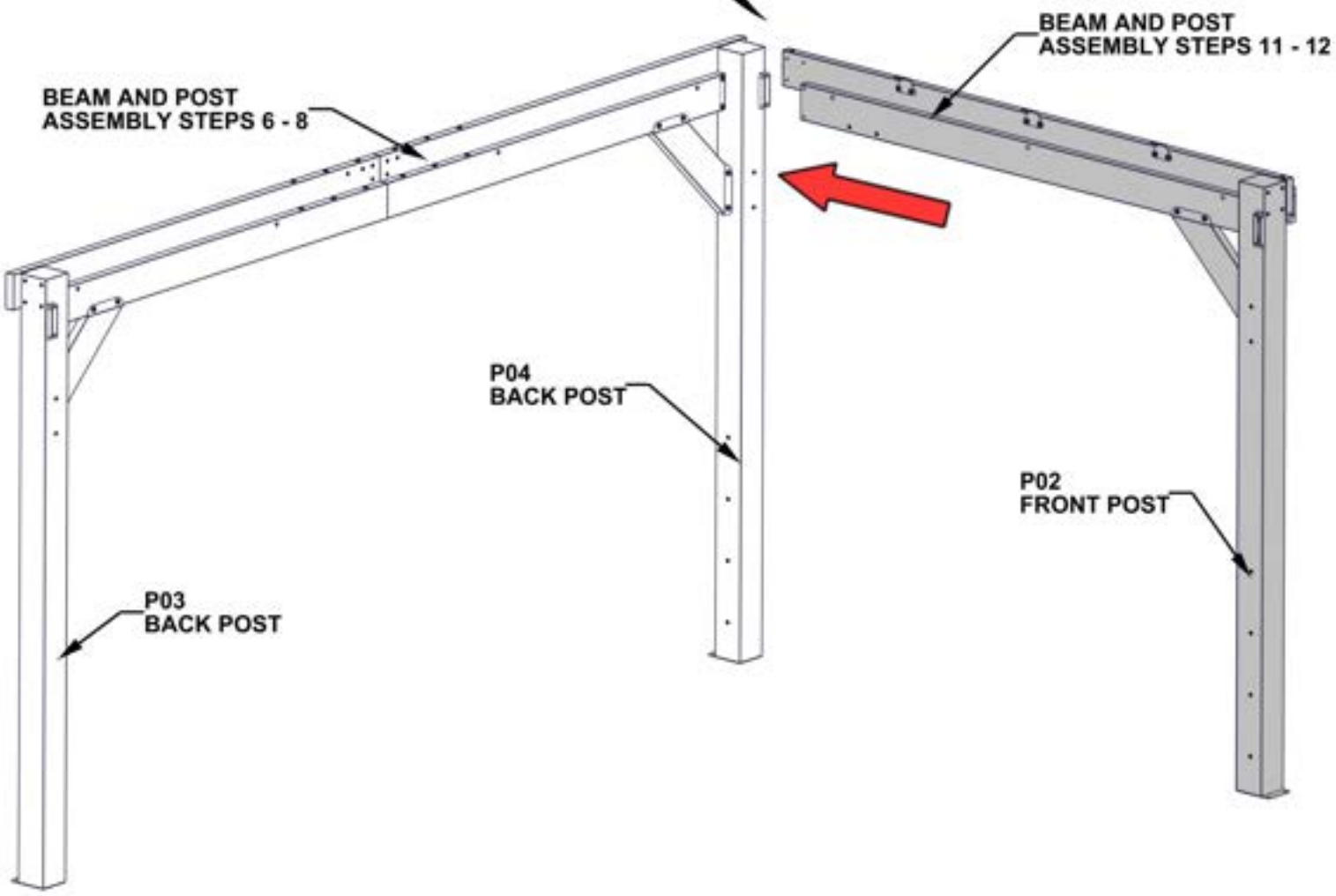

STEP 13B - FRAME ASSEMBLY

QTY	PartNo	DESCRIPTION
4	H101103	TORX SOCKET SCREW 1/4-20

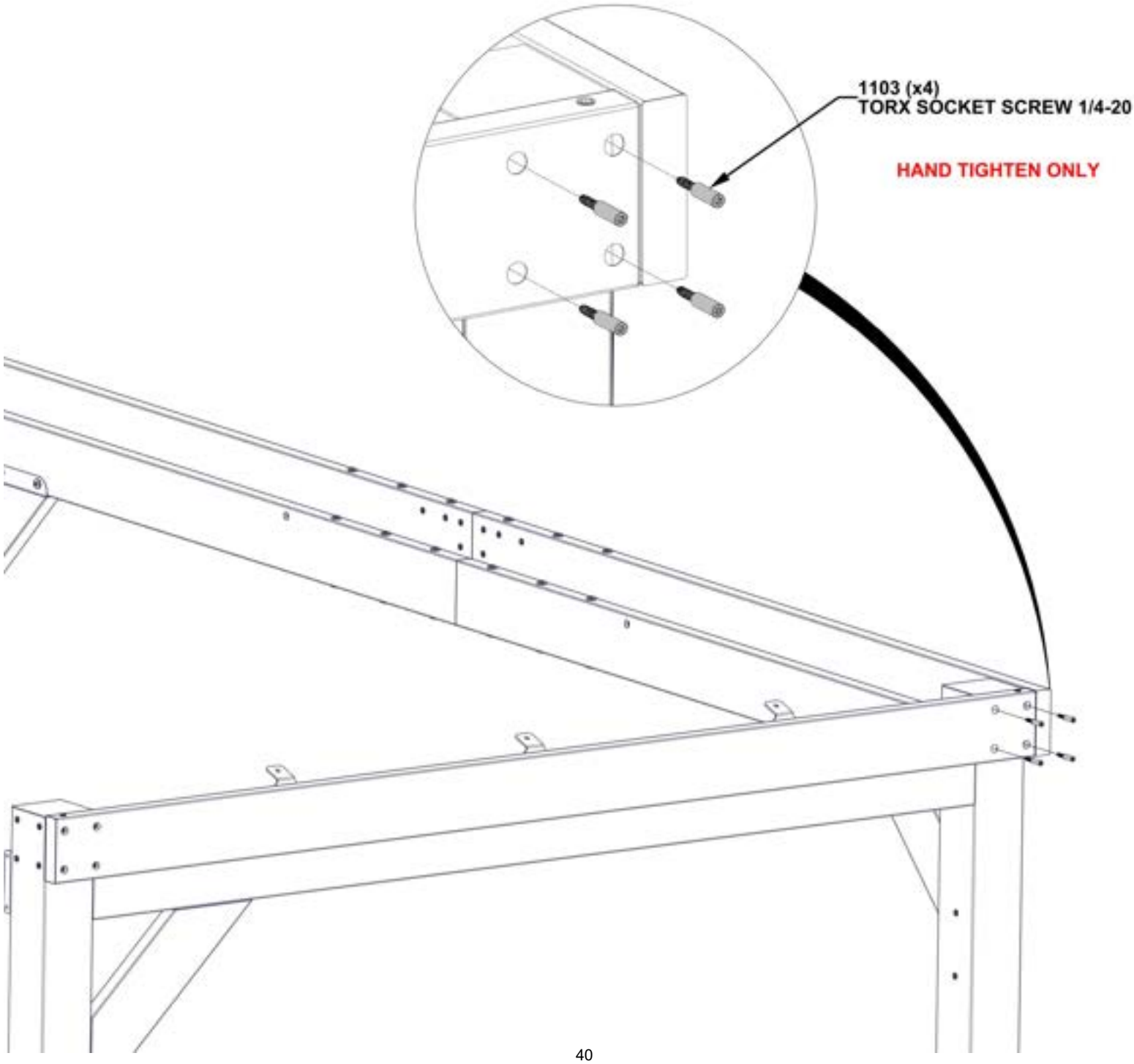

STEP 13C - FRAME ASSEMBLY

QTY	PartNo	DESCRIPTION
2	H101202	TORX PAN HEAD 1/4-20x3/4 ASSY

- SQUARE BEAM ASSEMBLY TO POST

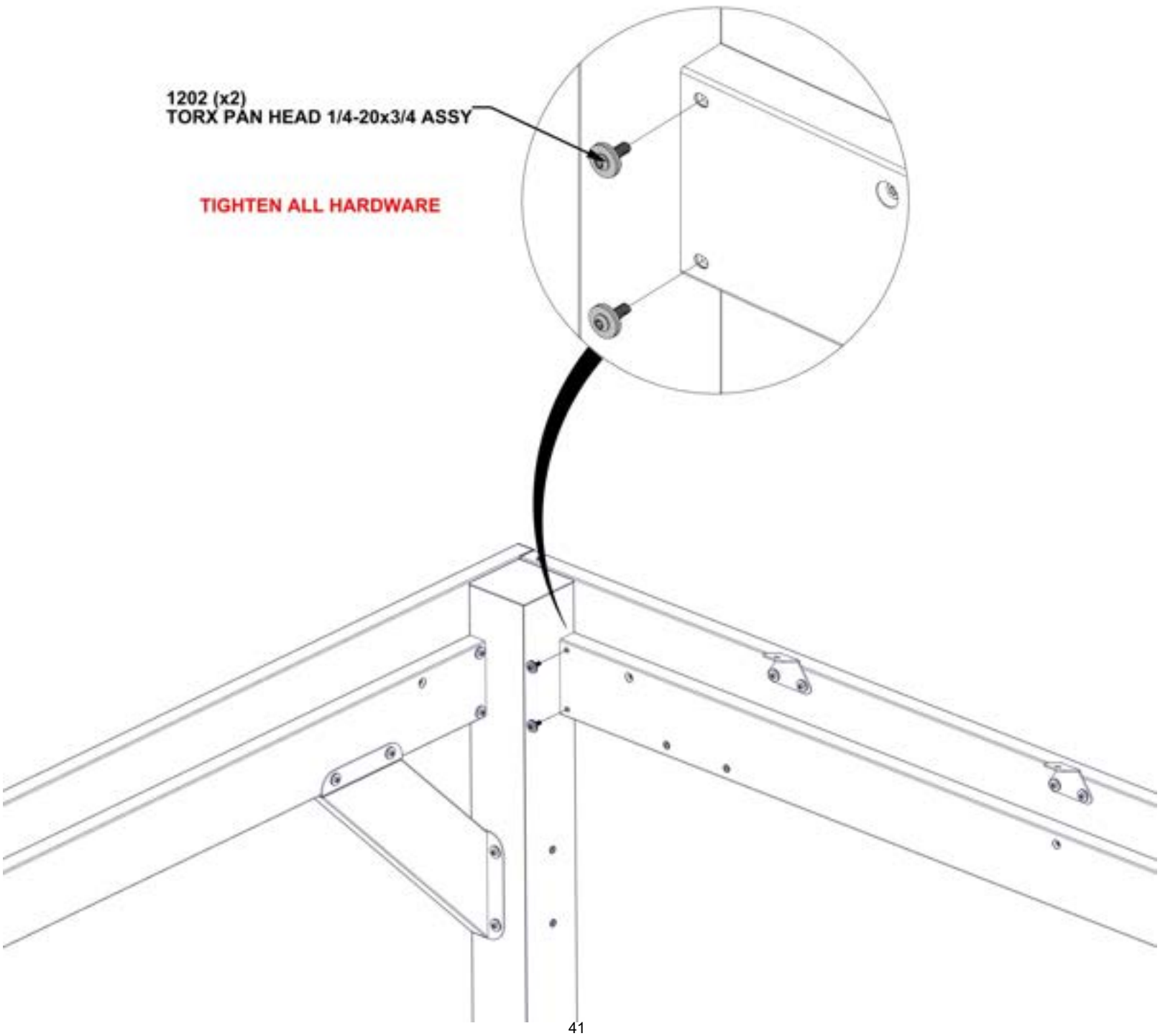

STEP 14 - FRAME ASSEMBLY



C02 CORBEL ASSEMBLY - A4M03526
(x1) 21 13/16"x5 1/4"x2 3/4" (70x134x553.5)

QTY	PartNo	DESCRIPTION
4	H101202	TORX PAN HEAD 1/4-20x3/4 ASSY

- ATTACH CORBELS TO BEAM AND POST.
- SQUARE AS NEEDED BEFORE TIGHTENING ALL HARDWARE.

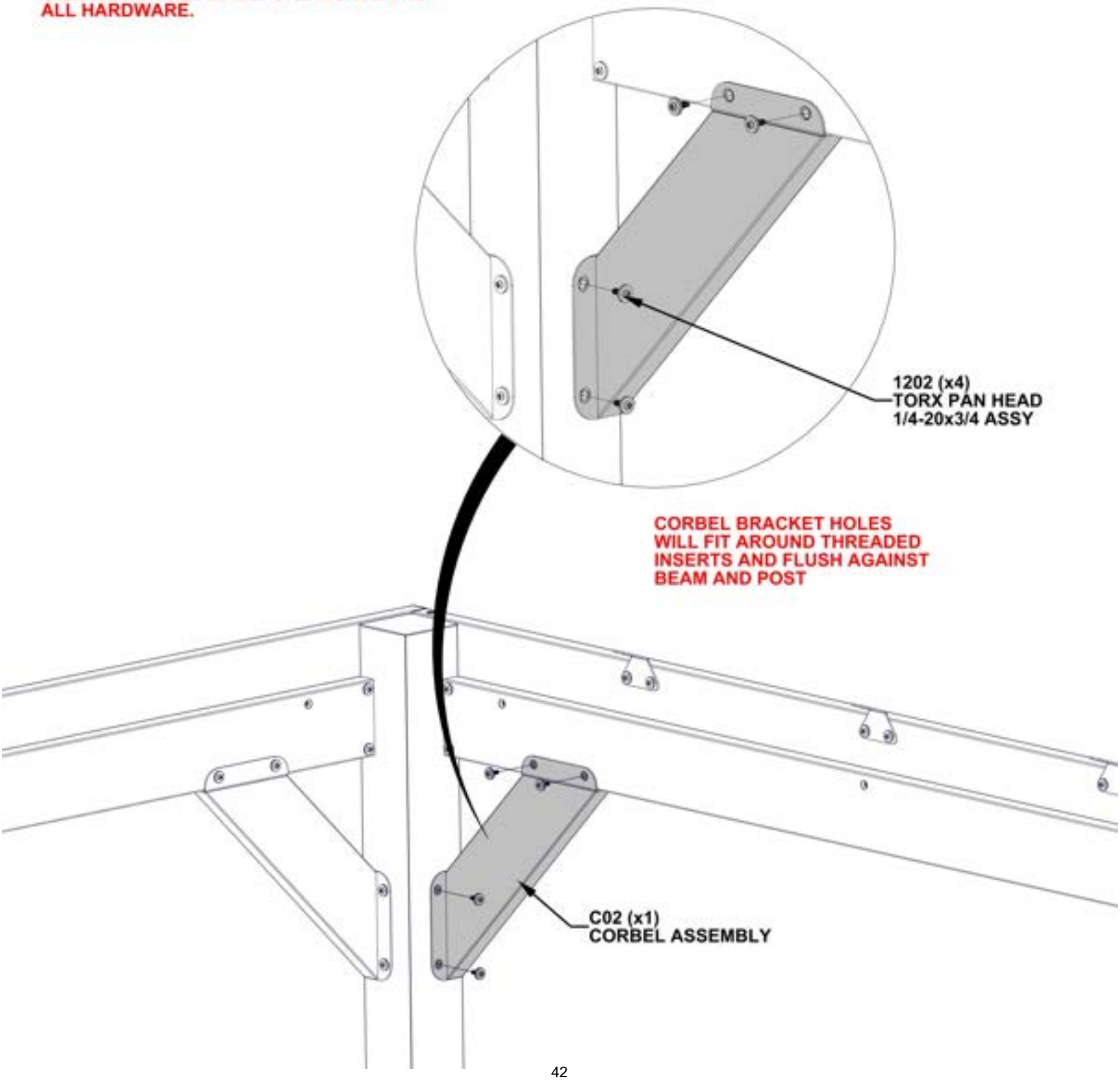

STEP 15 - POST ASSEMBLY

QTY	PartNo	DESCRIPTION
4	H101202	TORX PAN HEAD 1/4-20x3/4 ASSY

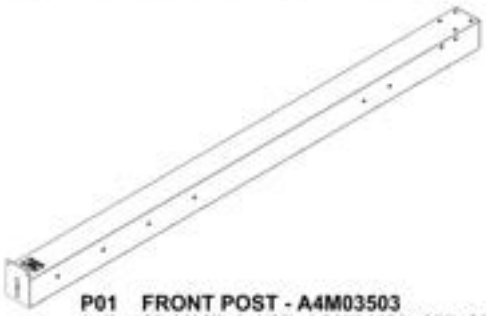

P01 FRONT POST - A4M03503
(x1) 89 9/16"x6 1/8"x4 3/4" (120x155x2275)



J4 BEAM BRACKET - A4M02990
(x2) 1"x1 5/16"x5 1/16" (25x33.2x128)

- FOR EASE OF ASSEMBLY, WE RECOMMEND USING SAW HORSES FOR STEPS 15 - 16.

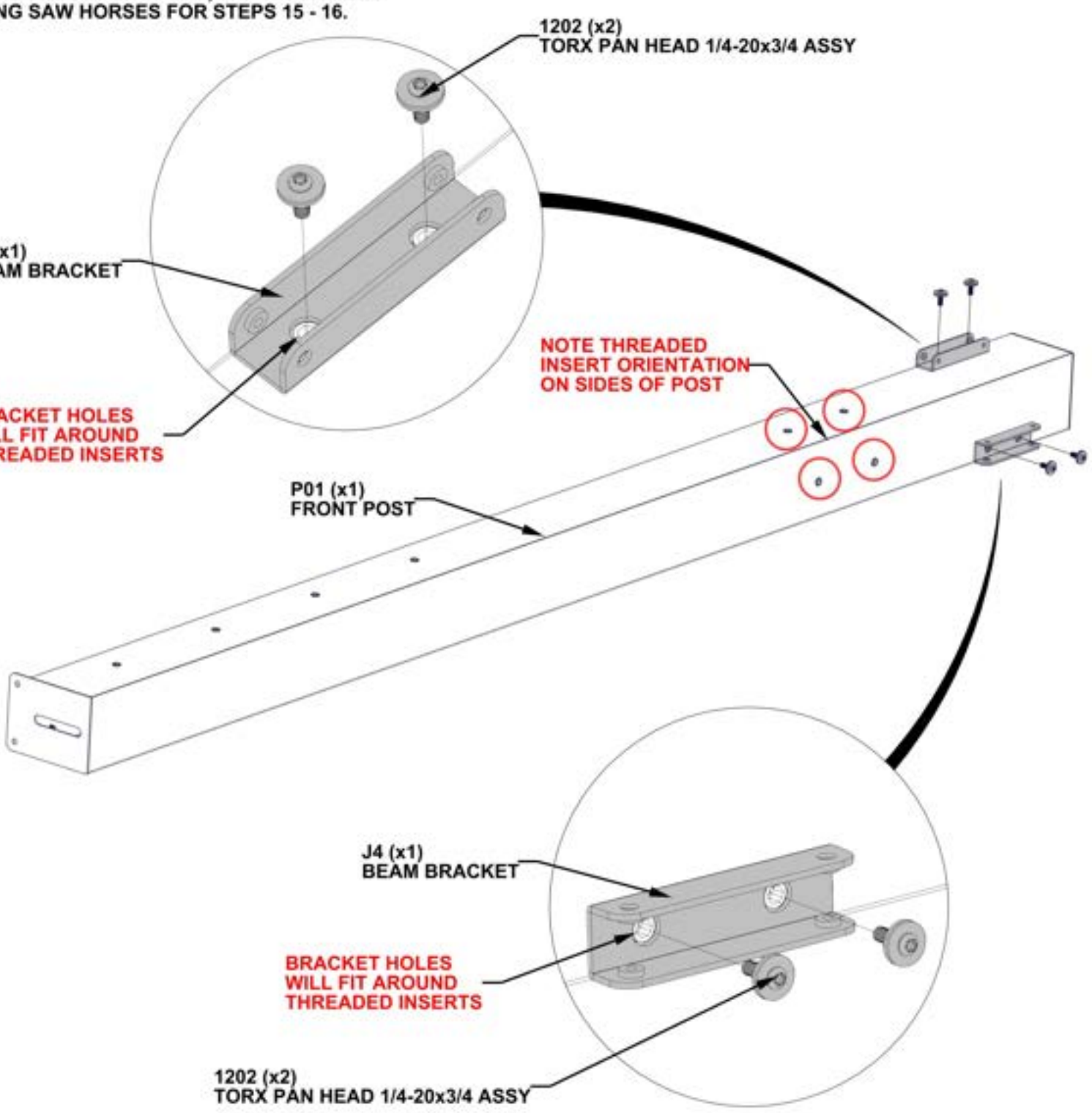

STEP 16A - FRAME ASSEMBLY

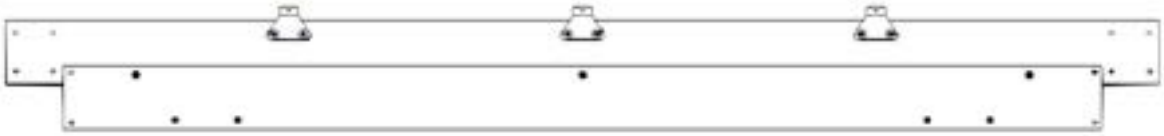

BEAM ASSEMBLY FROM STEPS 9 - 10

- SLIDE POST ASSEMBLY FROM STEP 15
  INTO THE BEAM ASSEMBLY FROM STEPS 9 - 10.

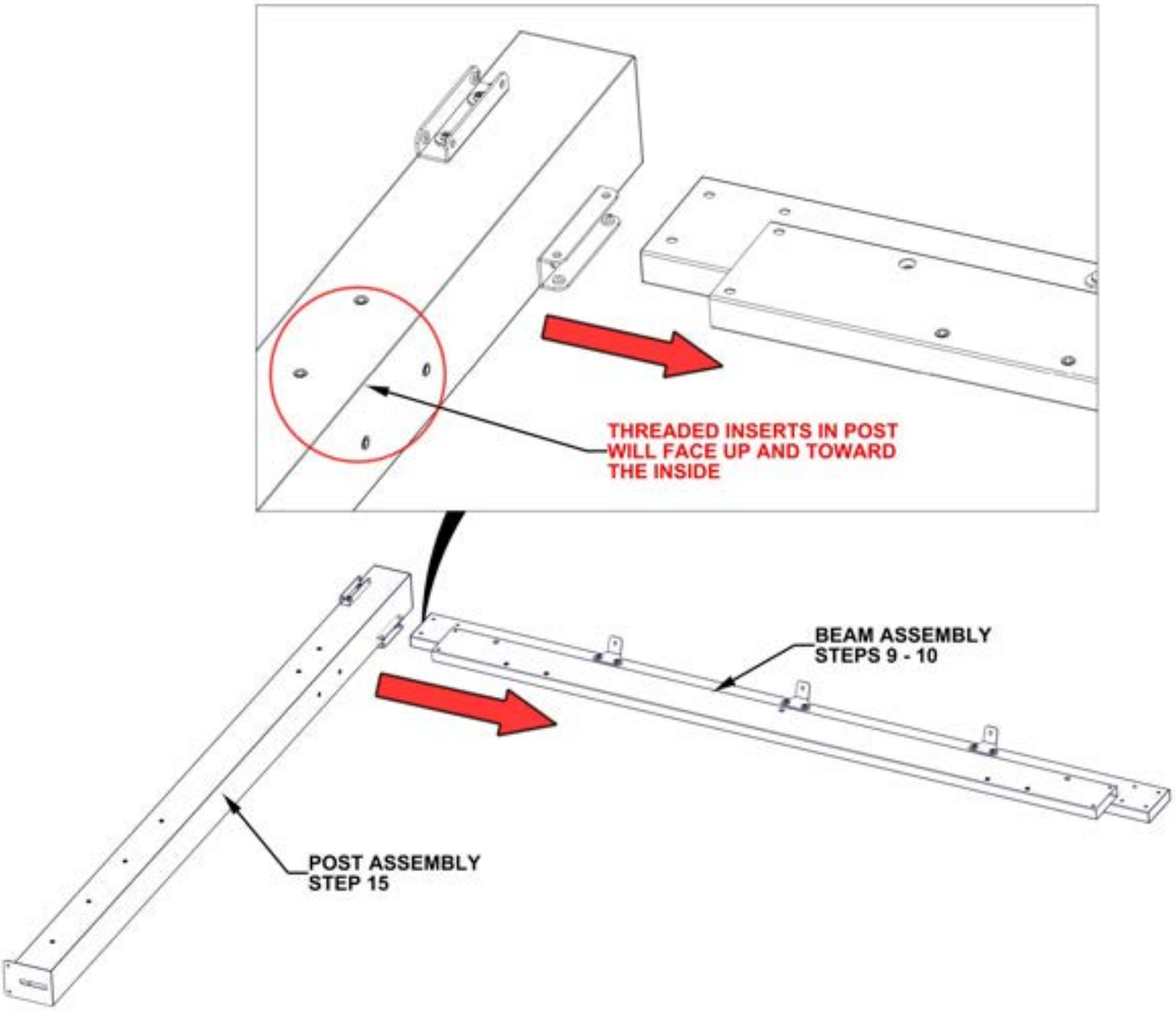

STEP 16B - FRAME ASSEMBLY

QTY	PartNo	DESCRIPTION
2	H101202	TORX PAN HEAD 1/4-20x3/4 ASSY

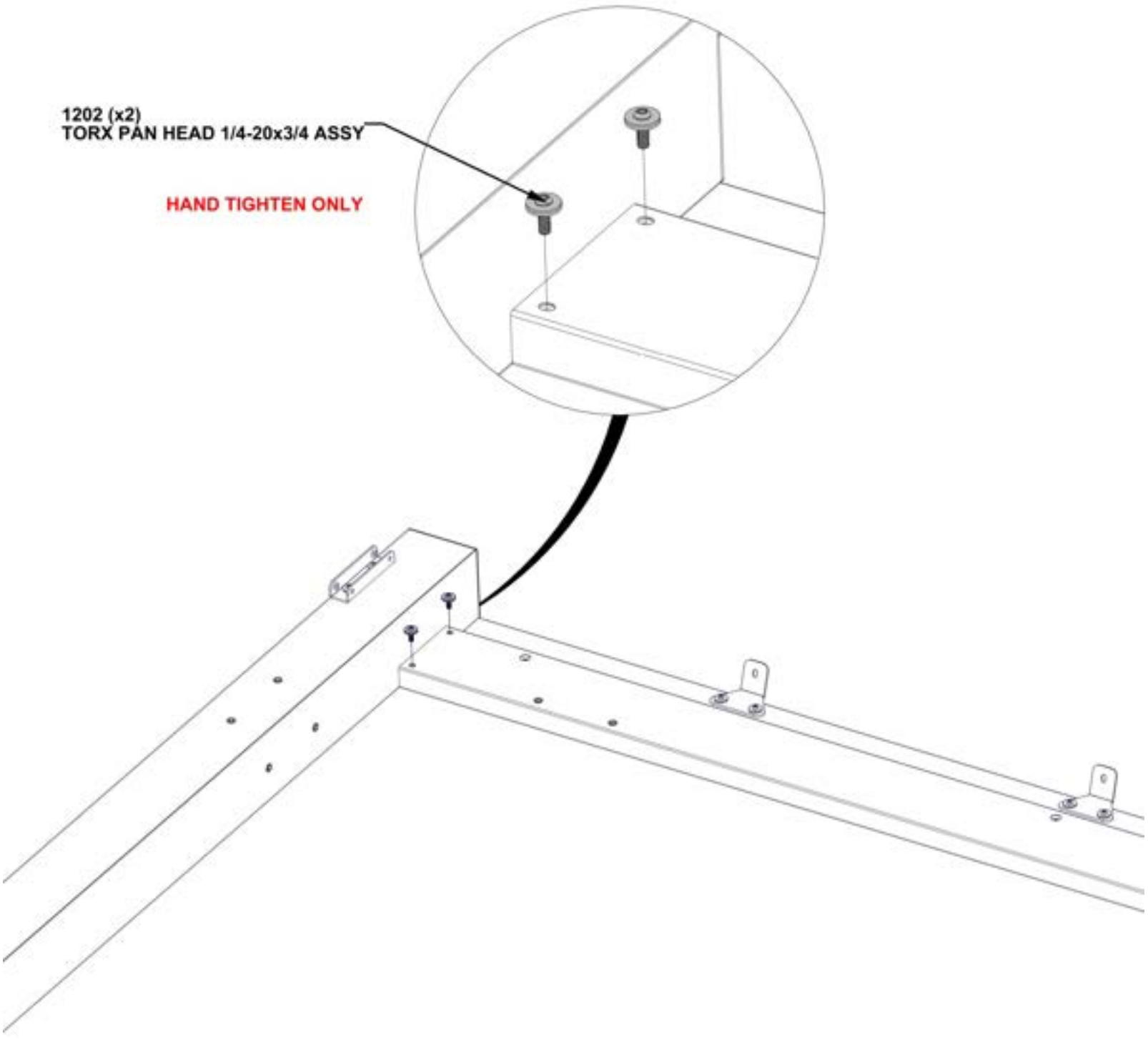

STEP 16C - FRAME ASSEMBLY



C02 CORBEL ASSEMBLY - A4M03526
(x1) 21 13/16"x5 1/4"x2 3/4" (70x134x553.5)

QTY	PartNo	DESCRIPTION
4	H101202	TORX PAN HEAD 1/4-20x3/4 ASSY

- ATTACH CORBEL TO BEAM AND POST.
- SQUARE AS NEEDED BEFORE TIGHTENING ALL HARDWARE FROM PREVIOUS STEPS.

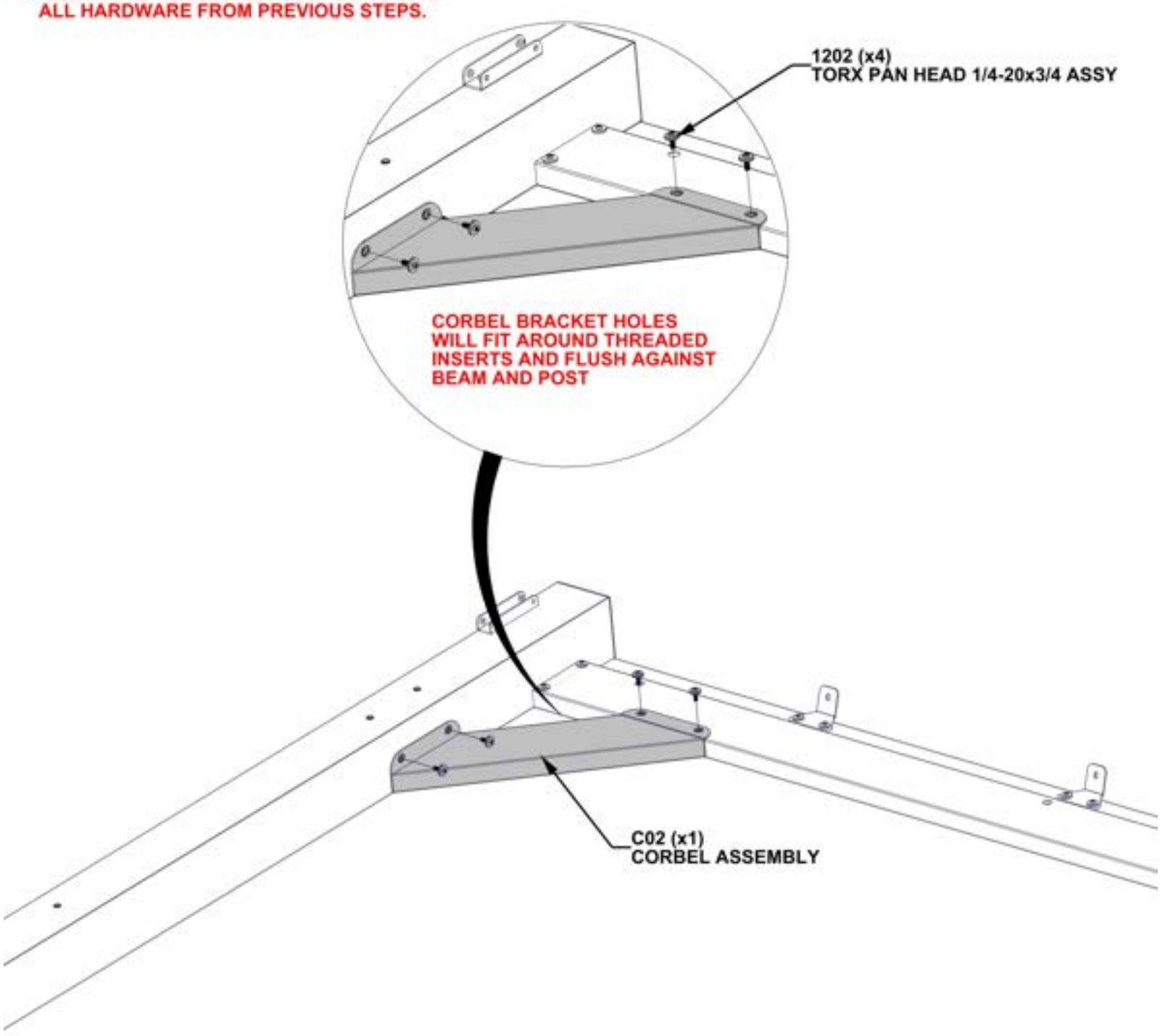

STEP 16D - FRAME ASSEMBLY

QTY	PartNo	DESCRIPTION
4	H101103	TORX SOCKET SCREW 1/4-20

- WITH AN ADDITIONAL PERSON, FLIP POST AND BEAM ASSEMBLY

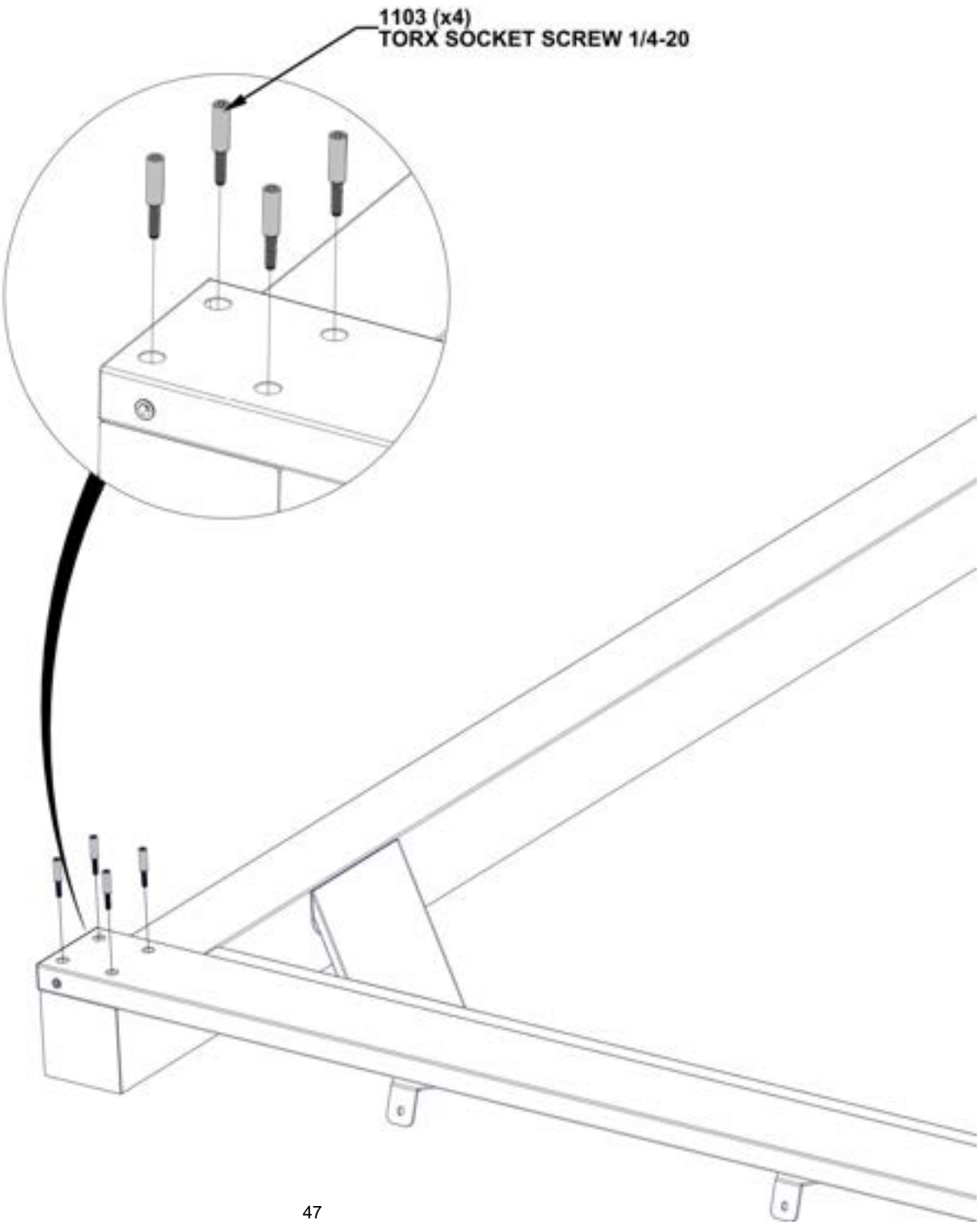

STEP 17A - FRAME ASSEMBLY

- WITH AT LEAST TWO OTHER PEOPLE, ATTACH BEAM AND POST ASSEMBLIES BY SLIDING IN PLACE.

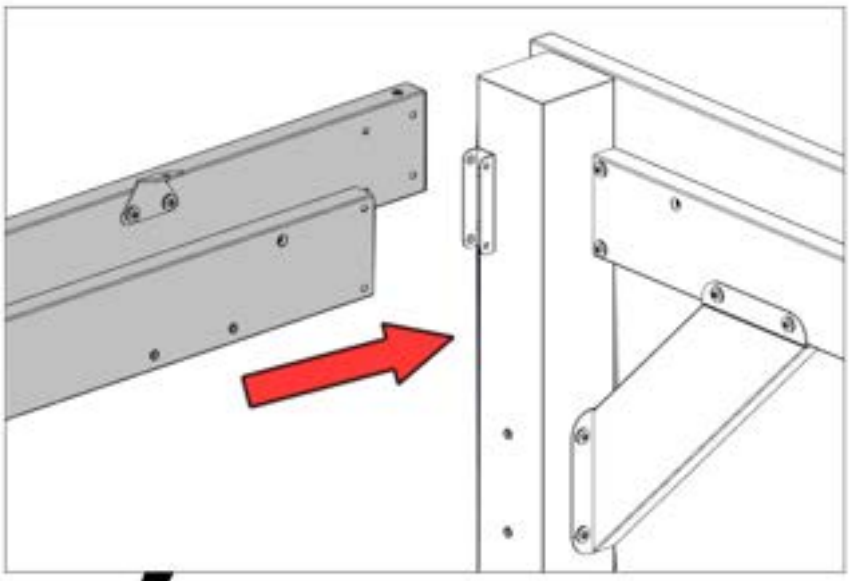

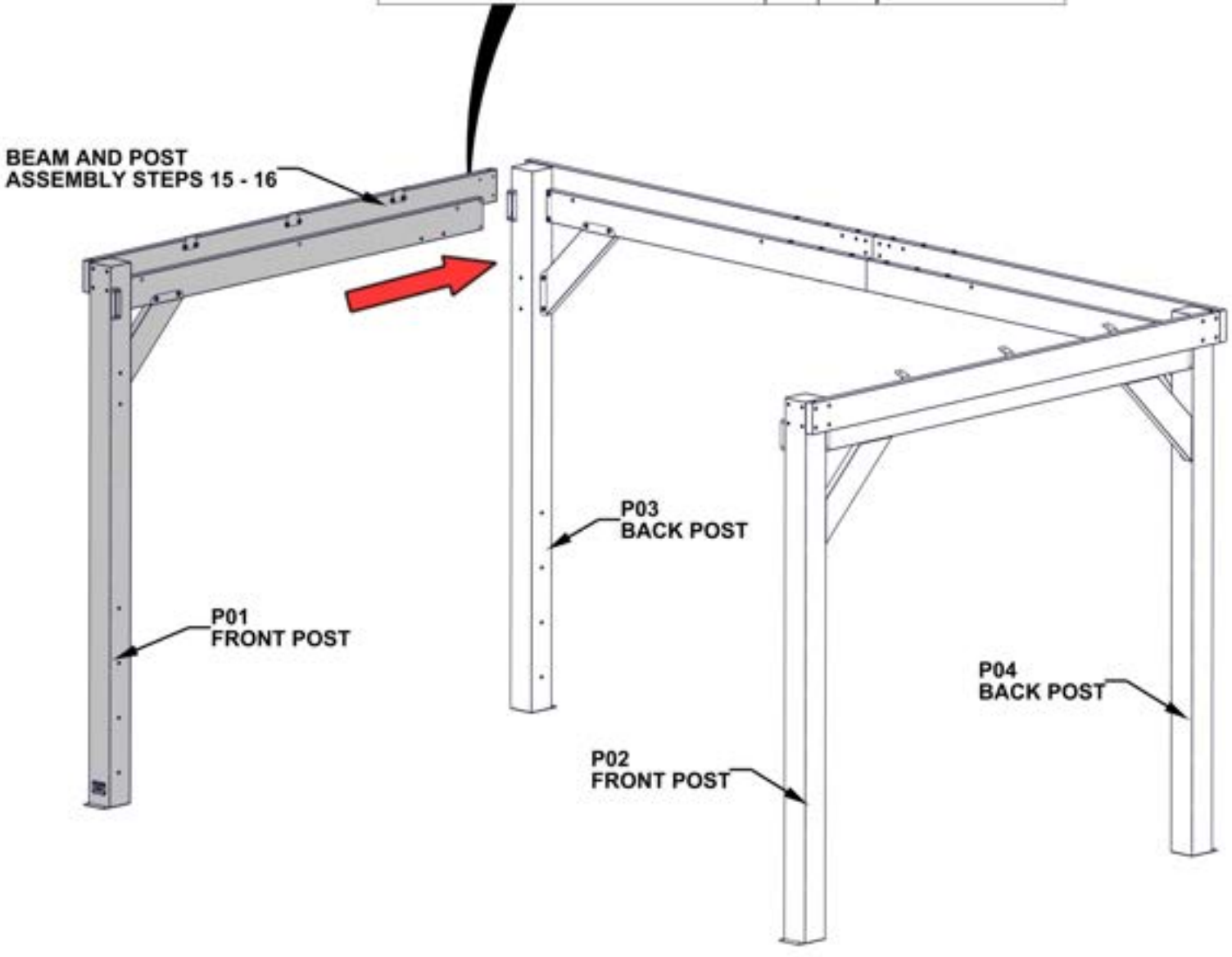

STEP 17B - FRAME ASSEMBLY

QTY	PartNo	DESCRIPTION
4	H101103	TORX SOCKET SCREW 1/4-20

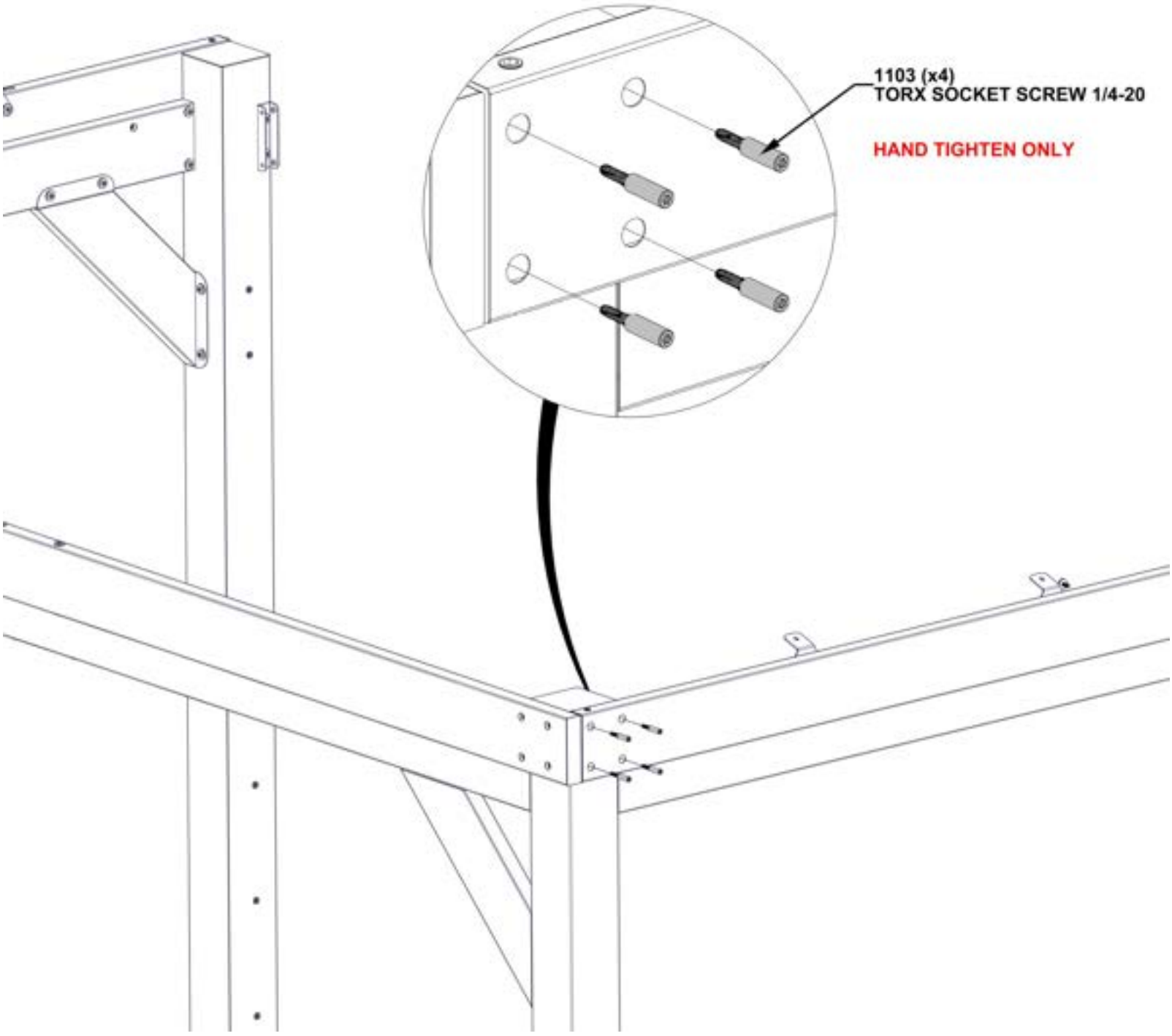

STEP 17C - FRAME ASSEMBLY

QTY	PartNo	DESCRIPTION
2	H101202	TORX PAN HEAD 1/4-20x3/4 ASSY

- SQUARE BEAM ASSEMBLY TO POST

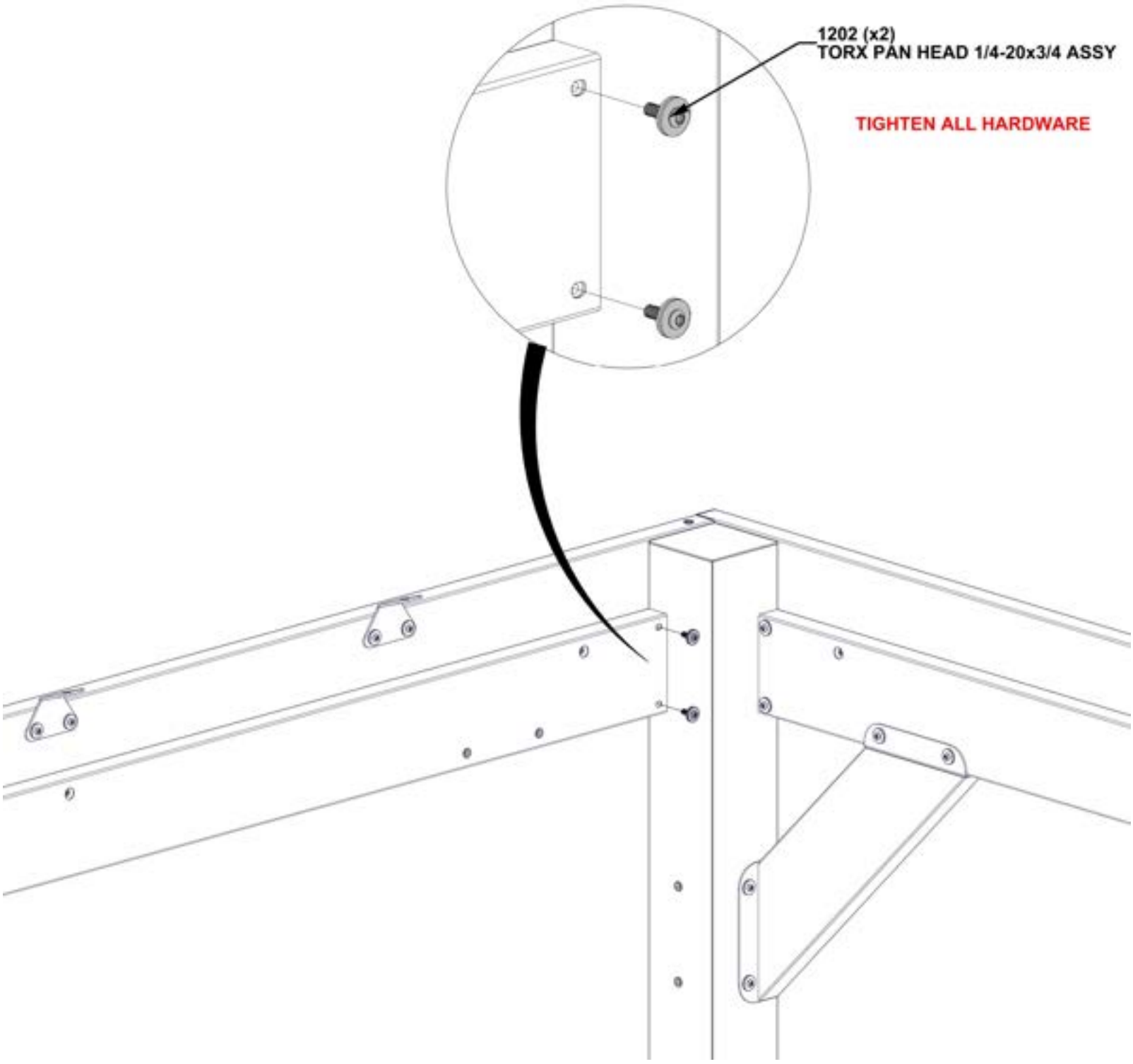

STEP 18 - FRAME ASSEMBLY



C01 (x1) CORBEL ASSEMBLY - A4M03525
21 13/16"x5 1/4"x2 3/4" (70x134x553.5)

QTY	PartNo	DESCRIPTION
4	H101202	TORX PAN HEAD 1/4-20x3/4 ASSY

- ATTACH CORBELS TO BEAM AND POST.
- SQUARE AS NEEDED BEFORE TIGHTENING ALL HARDWARE.

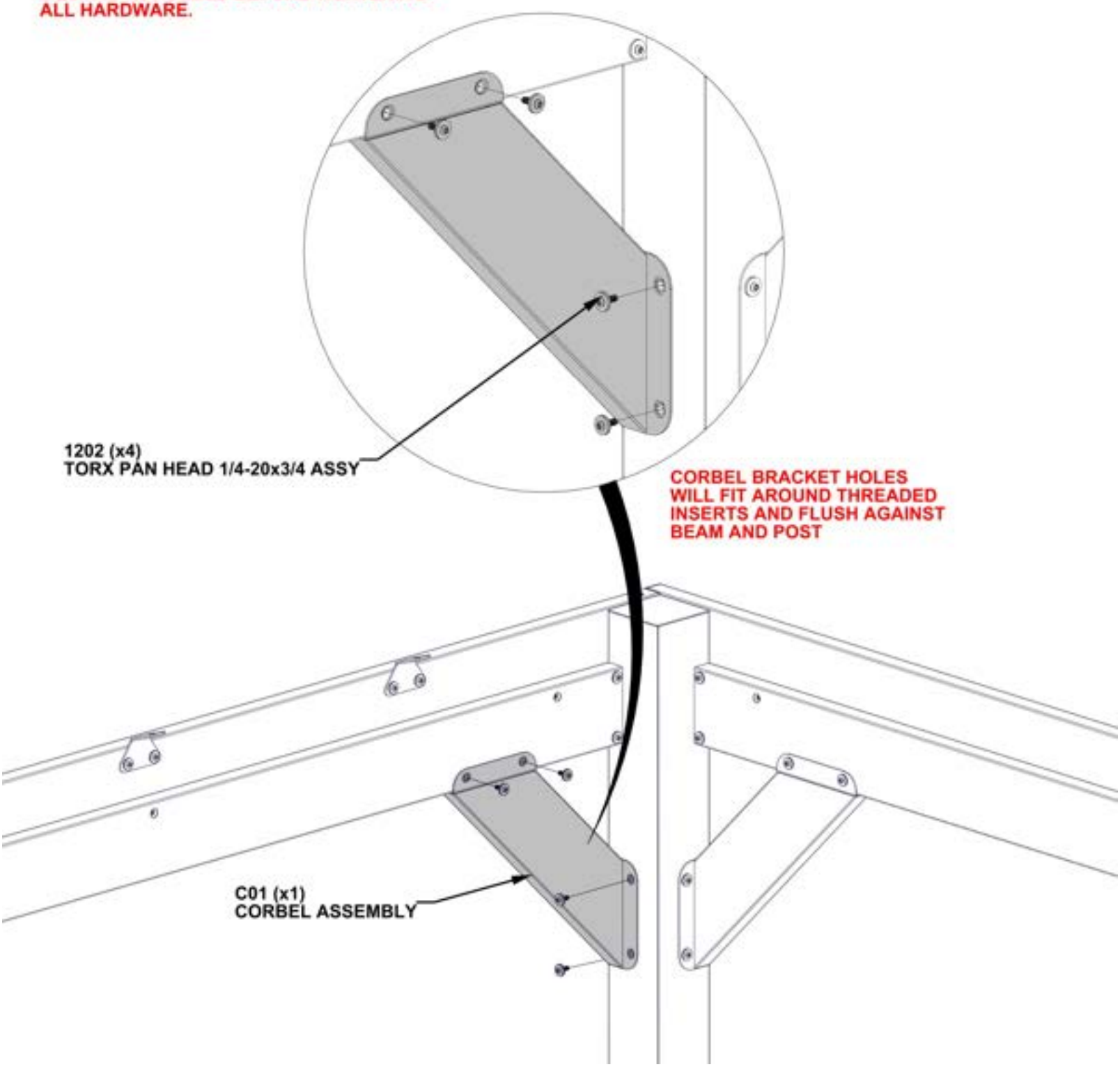

STEP 19A - FRAME ASSEMBLY

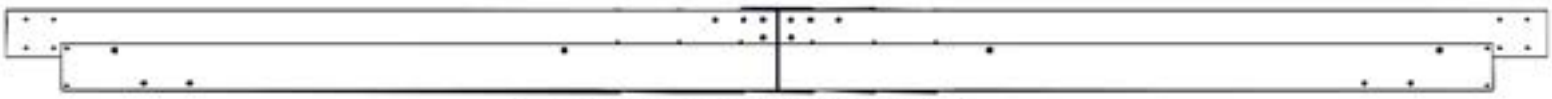

BEAM ASSEMBLY FROM STEPS 1 - 5

- WITH AT LEAST TWO OTHER PEOPLE, SPREAD FRONT POST APART ENOUGH TO ATTACH BEAM ASSEMBLY INTO BEAM BRACKETS.

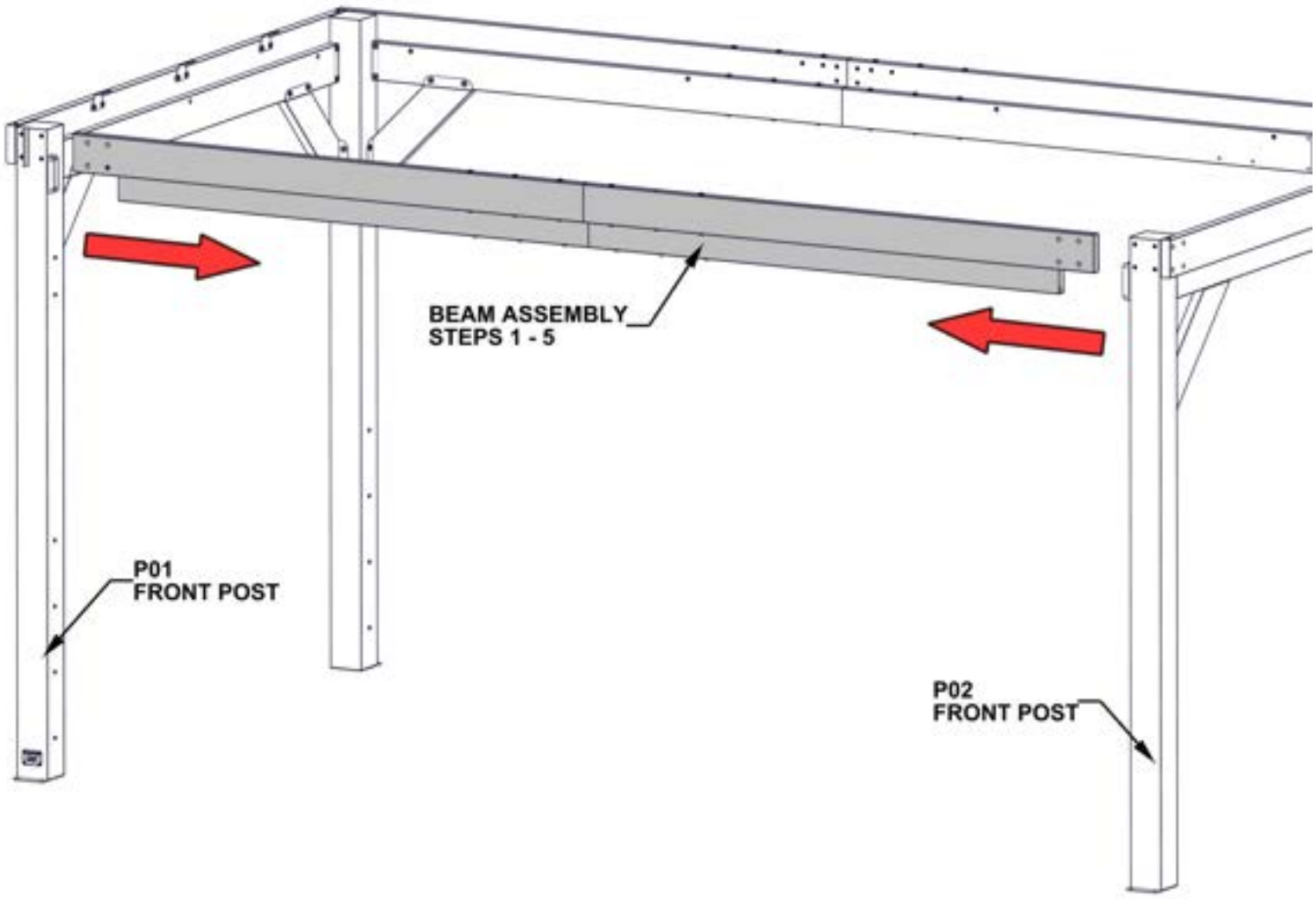

STEP 19B - FRAME ASSEMBLY

QTY	PartNo	DESCRIPTION
8	H101103	TORX SOCKET SCREW 1/4-20

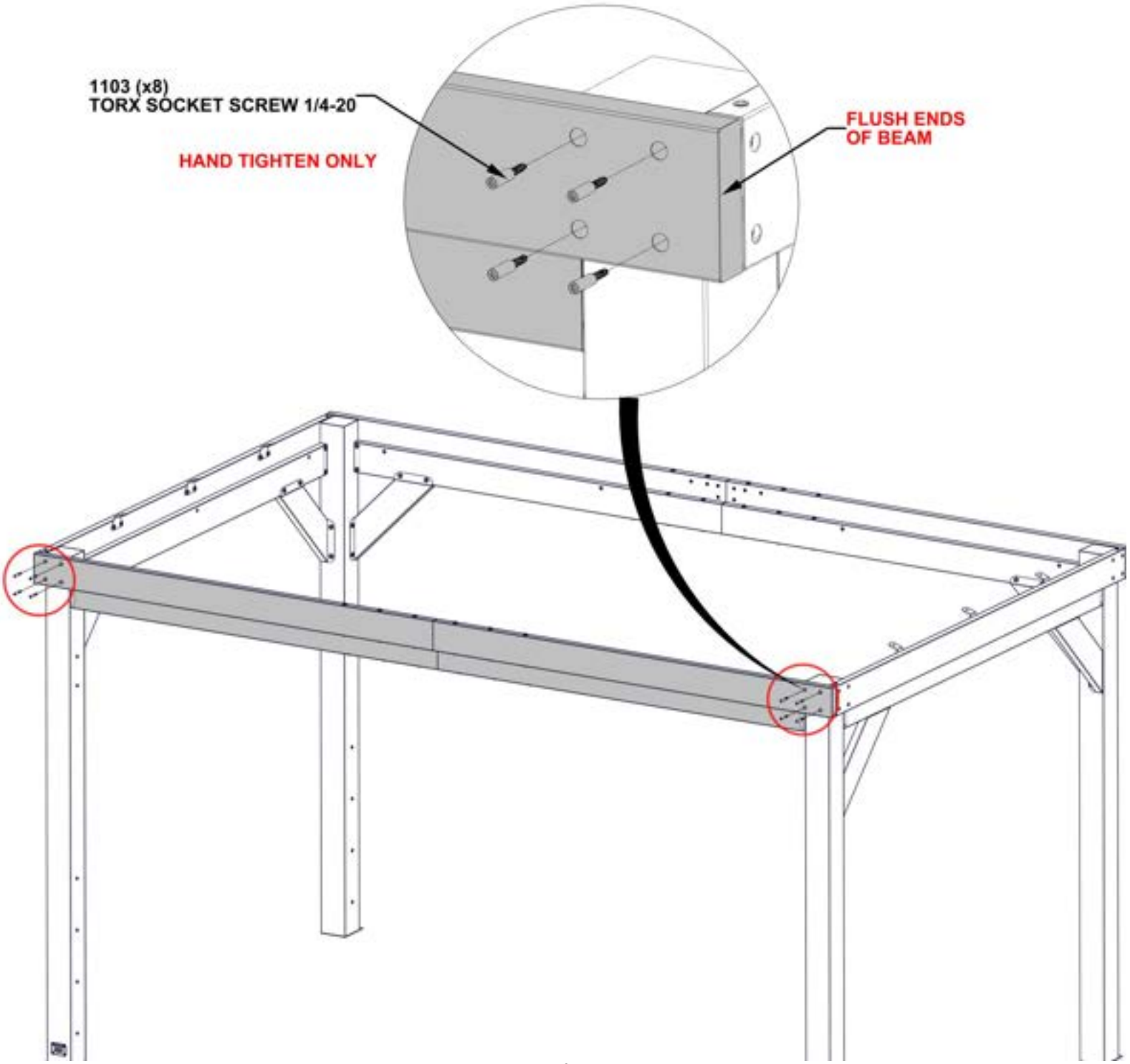

STEP 19C - FRAME ASSEMBLY

QTY	PartNo	DESCRIPTION
4	H101202	TORX PAN HEAD 1/4-20x3/4 ASSY

- SQUARE BEAM ASSEMBLY TO POST

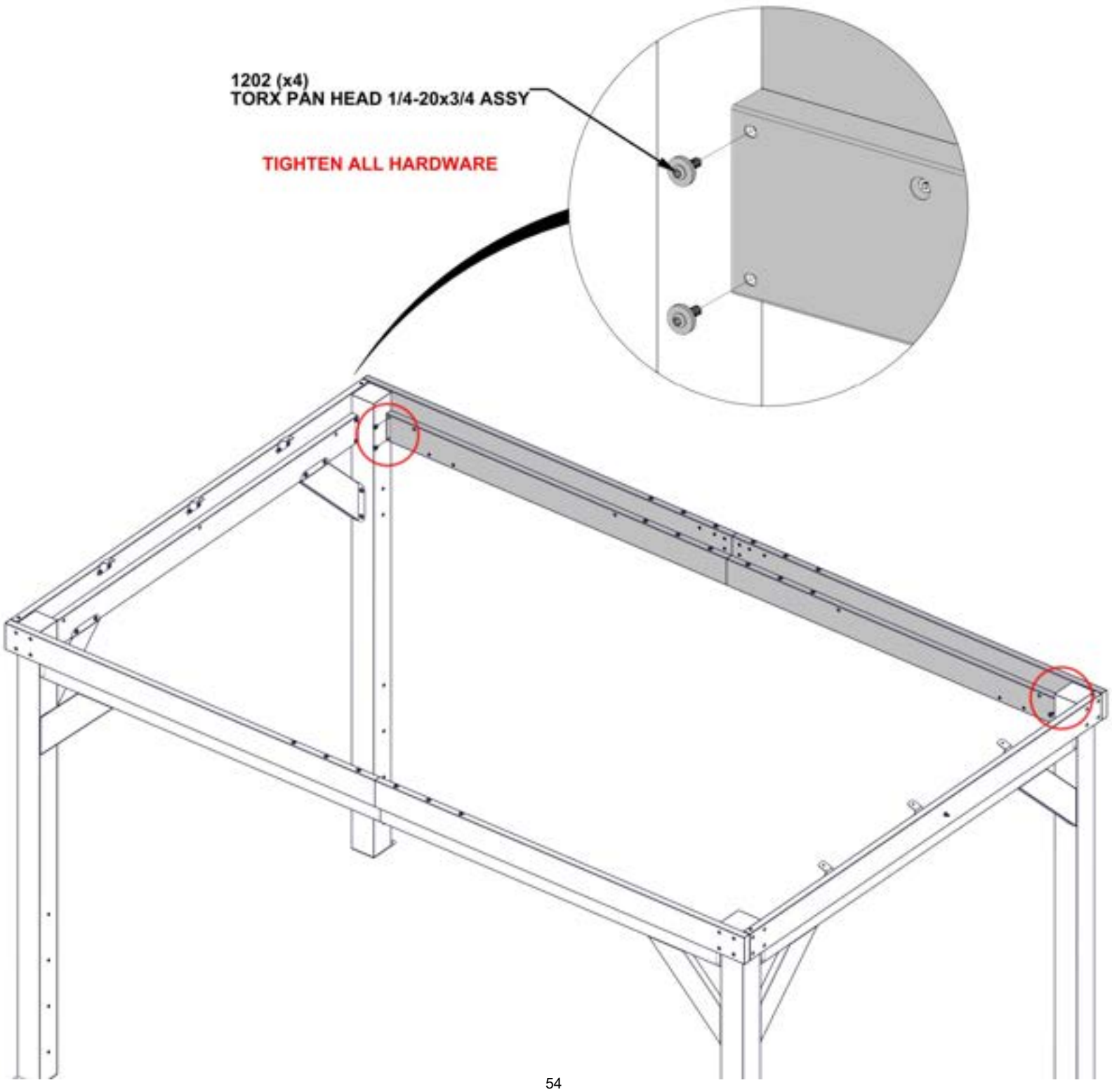

STEP 20 - FRAME ASSEMBLY

QTY	PartNo	DESCRIPTION
8	H101202	TORX PAN HEAD 1/4-20x3/4 ASSY



C01 CORBEL ASSEMBLY - A4M03525
(x1) 21 13/16"x5 1/4"x2 3/4" (70x134x553.5)



C02 CORBEL ASSEMBLY - A4M03526
(x1) 21 13/16"x5 1/4"x2 3/4" (70x134x553.5)

- ATTACH CORBELS TO BEAM AND POST.
- SQUARE AS NEEDED BEFORE TIGHTENING ALL HARDWARE FROM PREVIOUS STEPS.

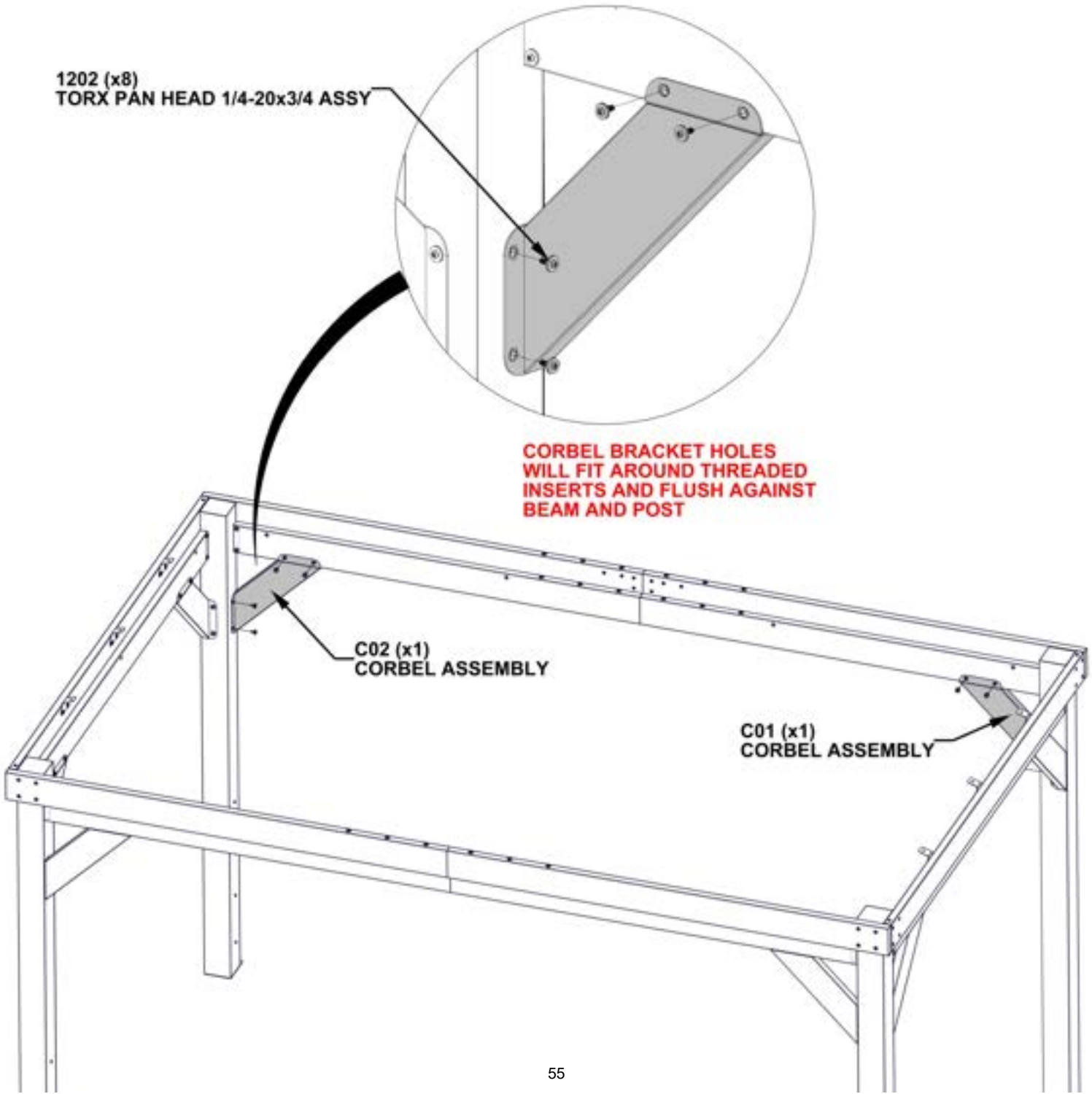

STEP 21 - SQUARE STRUCTURE

CRITICAL:
- **SQUARE UNIT BEFORE PROCEEDING TO NEXT STEPS.**
- **THE BELOW DIMENSIONS ARE CRITICAL TO THE FINAL ASSEMBLY.**
- **MEASUREMENTS SHOULD BE WITHIN +/- 1/4" (6mm).**
- **MEASUREMENTS OUTSIDE OF TOLERANCE WILL LEAD TO ISSUES ON FUTURE ASSEMBLY STEPS.**
- **TIGHTEN ALL HARDWARE FROM PREVIOUS STEPS.**

MEASUREMENTS TAKEN FROM INSIDE CORNER TO INSIDE CORNER OF POST

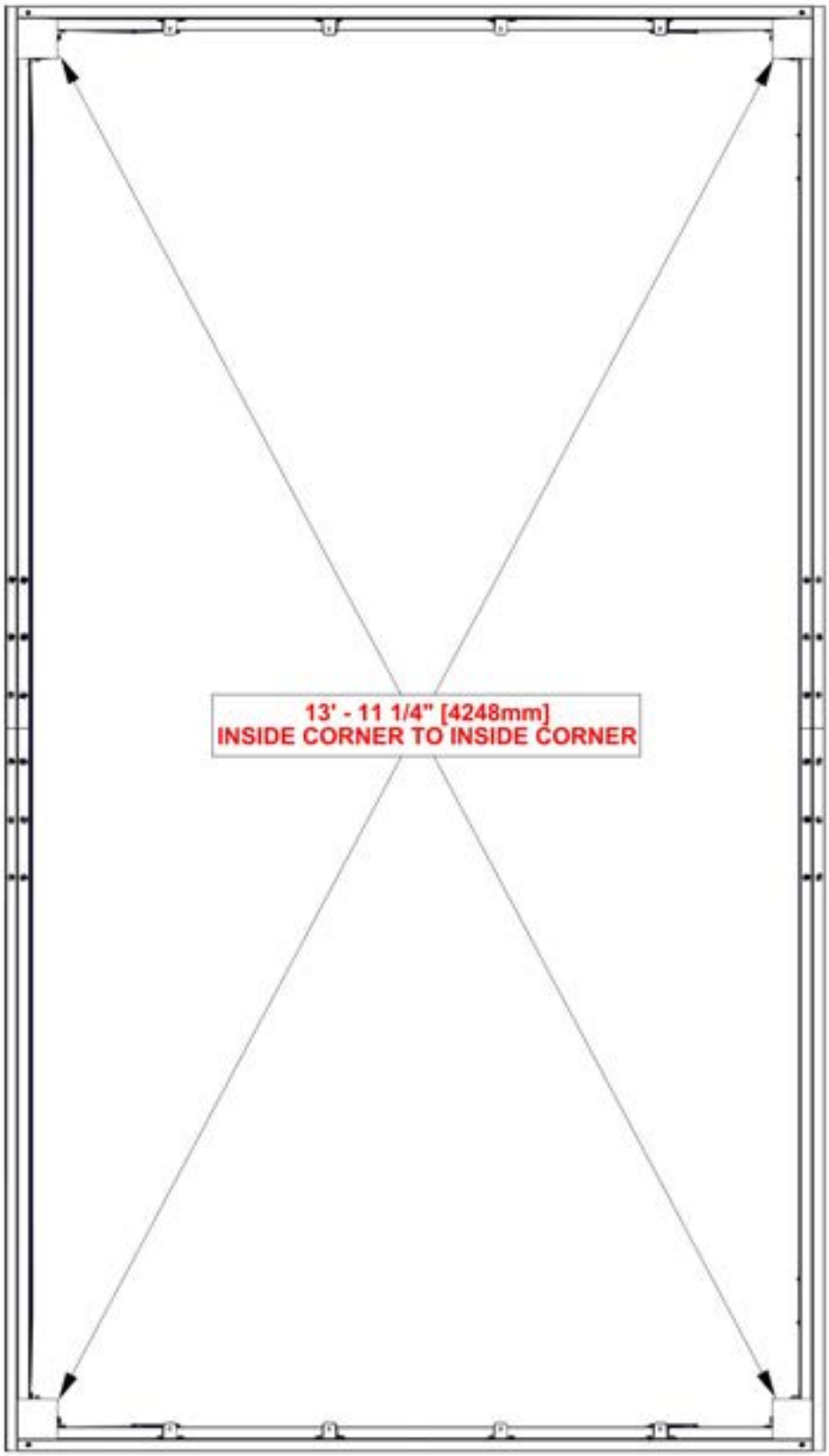

STEP 22 - GABLE ASSEMBLY



B07 (x2) GABLE ARM ASSEMBLY - A4M03513
29 3/16"x5 1/4"x1 7/16" (36x134x741)

QTY	PartNo	DESCRIPTION
8	H101103	TORX SOCKET SCREW 1/4-20

- YOU WILL NEED A LADDER FOR STEPS 22 - 49.

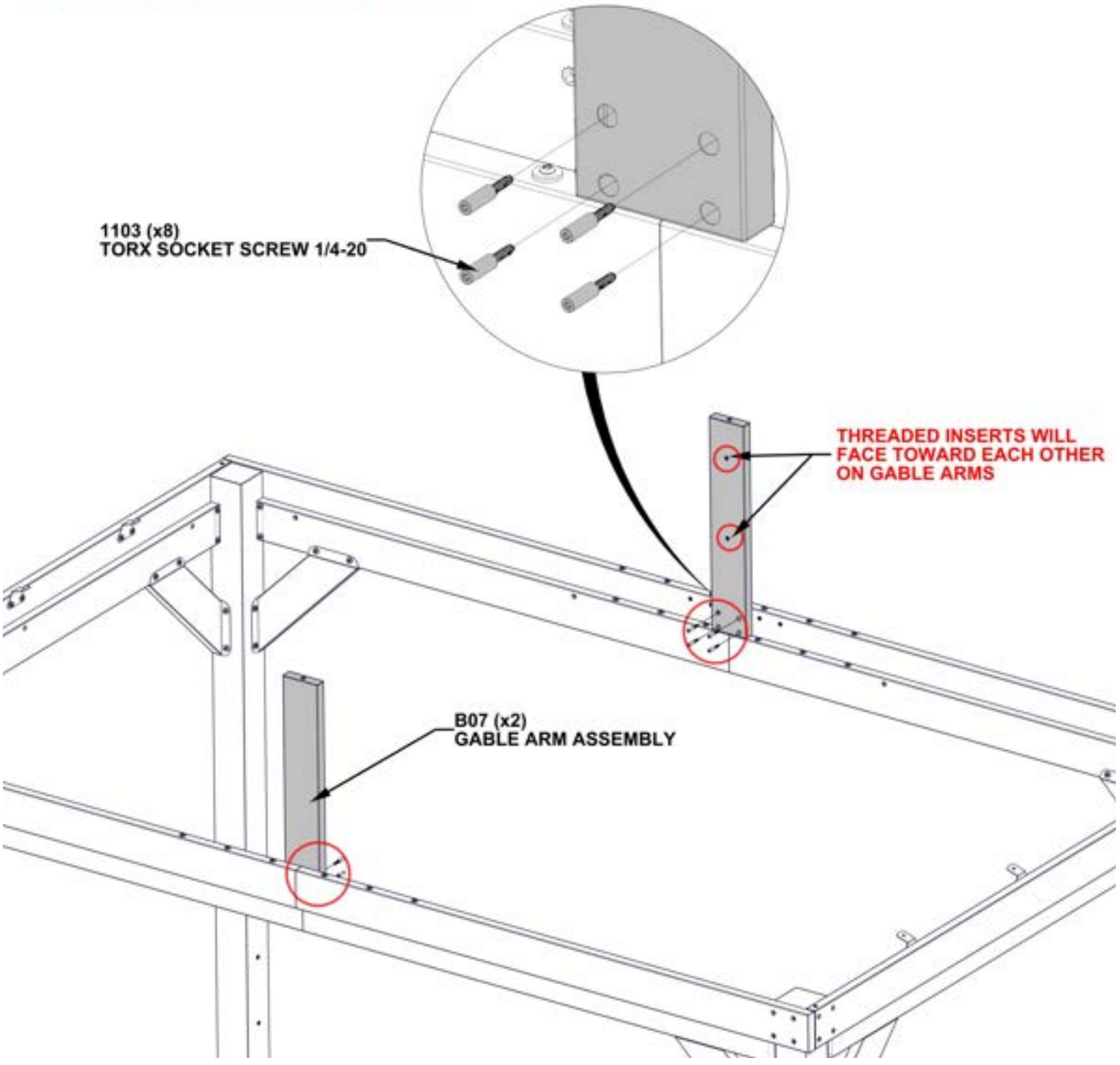

STEP 23 - RIDGE BEAM ASSEMBLY

QTY	PartNo	DESCRIPTION
6	H101202	TORX PAN HEAD 1/4-20x3/4 ASSY



B11 RIDGE BEAM ASSEMBLY - A4M03517
(x1) 61 3/16"x5 1/4"x1 7/16" (36x134x1554)



J2 SPLICE BRACKET - A4M01270
(x1) 1 1/4"X5 1/8"X15 3/4" (33x131x400)

- FOR EASE OF ASSEMBLY, WE RECOMMEND USING SAW HORSES FOR STEPS 23 - 25.

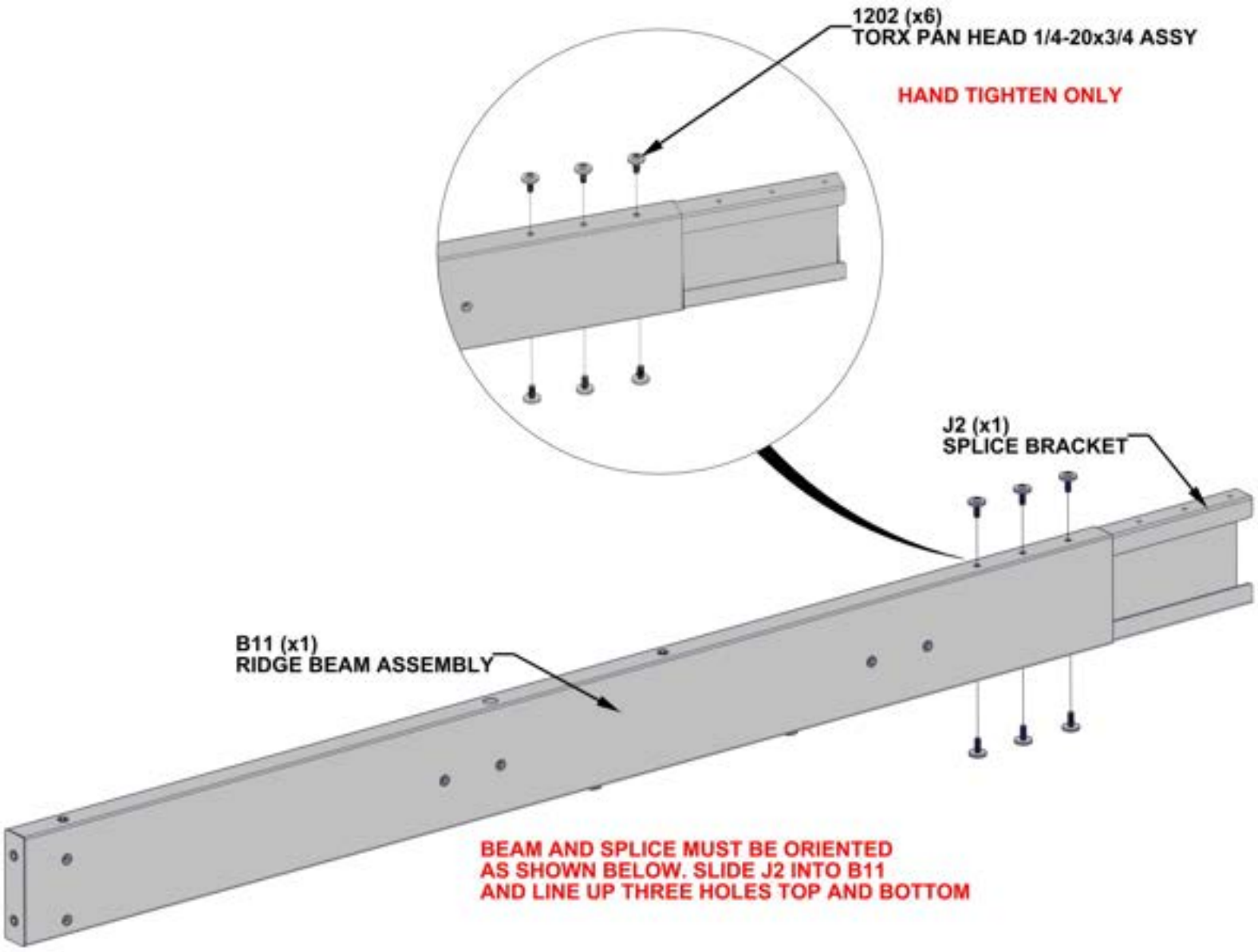

STEP 24 - RIDGE BEAM ASSEMBLY

QTY	PartNo	DESCRIPTION
6	H101202	TORX PAN HEAD 1/4-20x3/4 ASSY



B10 RIDGE BEAM ASSEMBLY - A4M03516
(x1) 67 1/16"x5 1/4"x1 7/16" (36x134x1704)

- SLIDE B10 INTO SPLICE BRACKET. GENTLY TAP ENDS OF ASSEMBLY WITH RUBBER MALLET UNTIL GAP CLOSES.

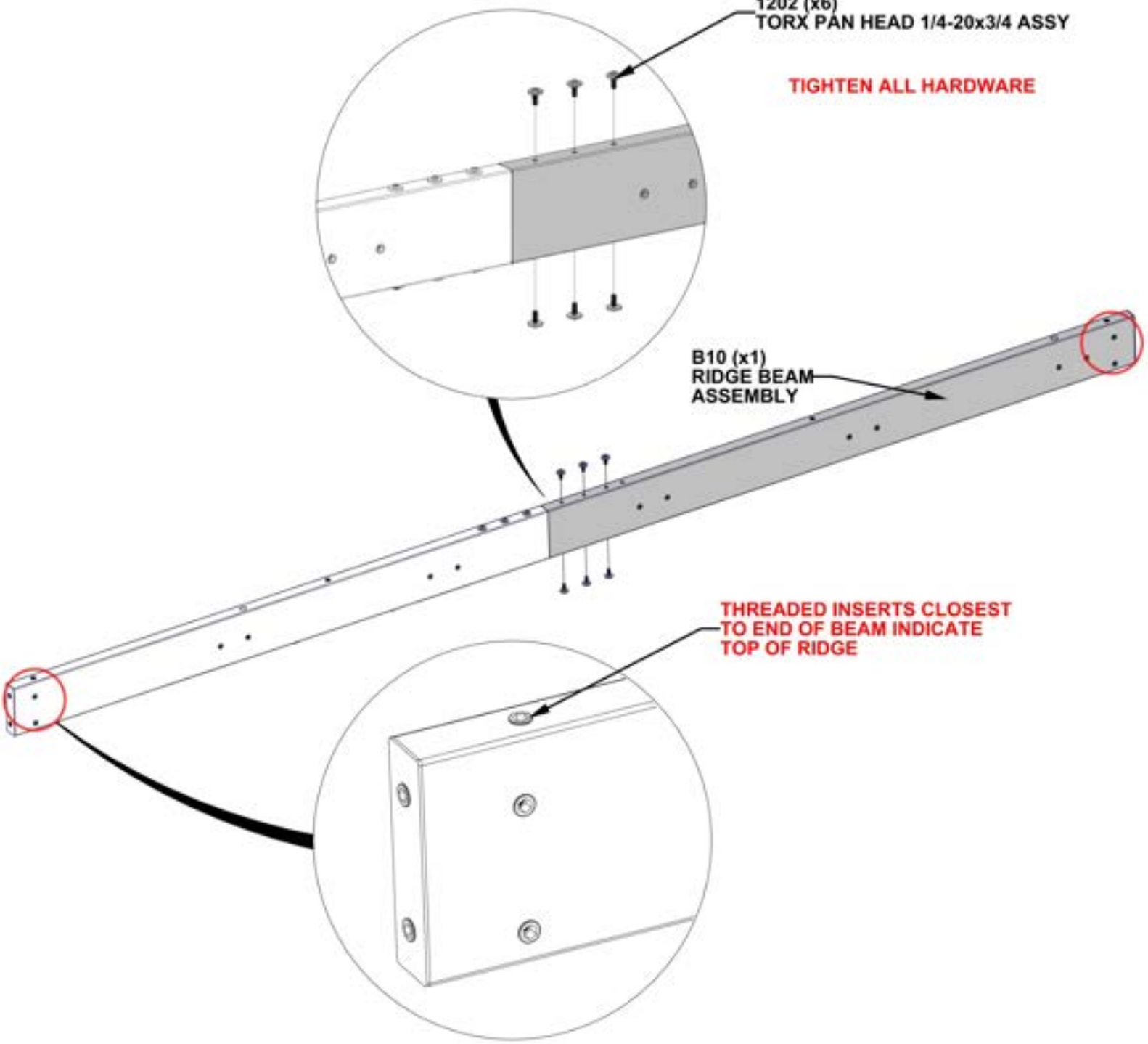

STEP 25 - RIDGE BEAM ASSEMBLY



J3 GABLE BRACKET - A4M03805
(x2) 11 1/8"x6 7/16"x1/16" (2x163x282)

QTY	PartNo	DESCRIPTION
4	H101202	TORX PAN HEAD 1/4-20x3/4 ASSY

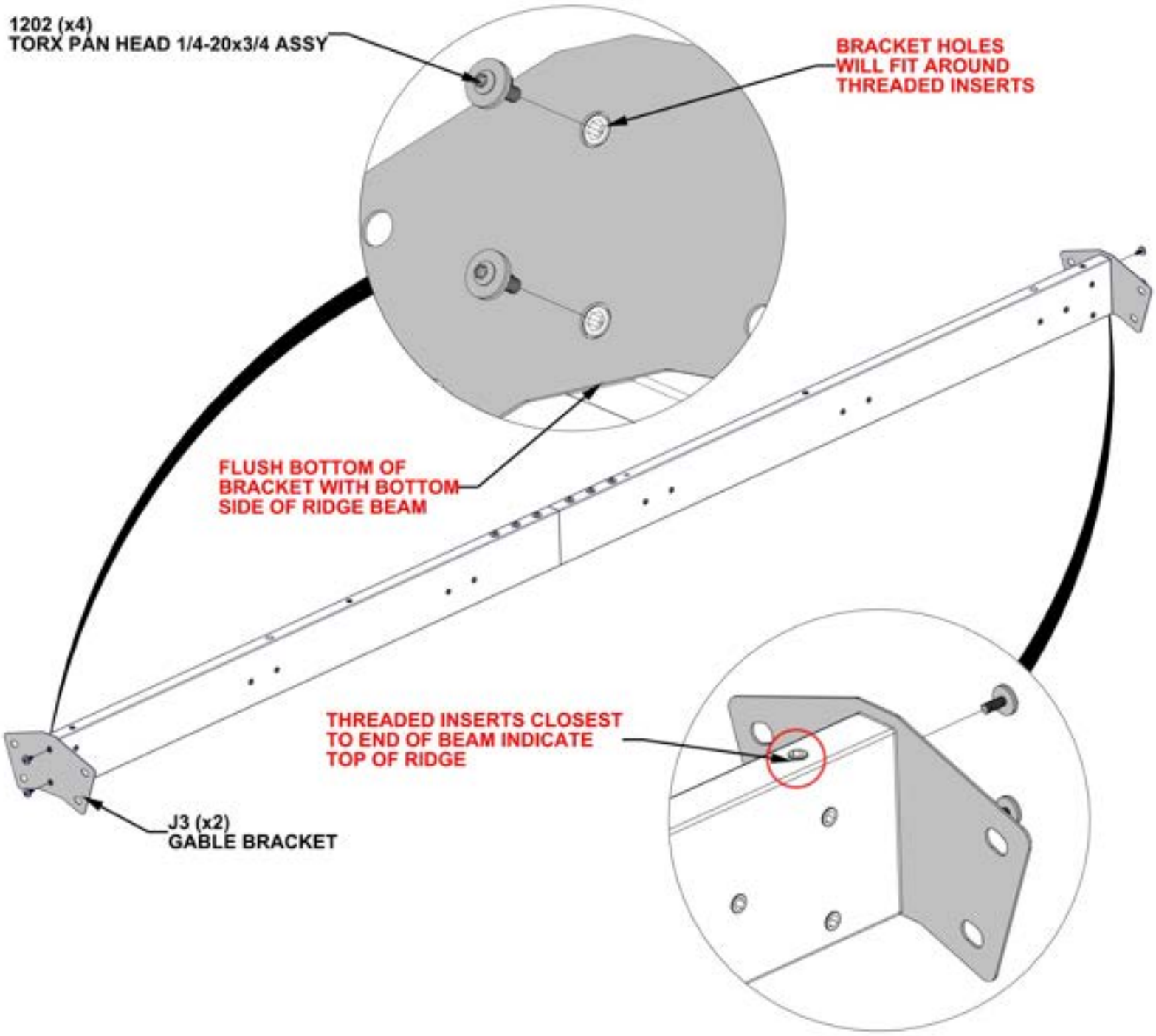

STEP 26 - RIDGE ASSEMBLY

QTY	PartNo	DESCRIPTION
2	H101230	BOLT WH 5/16x6 S.S.

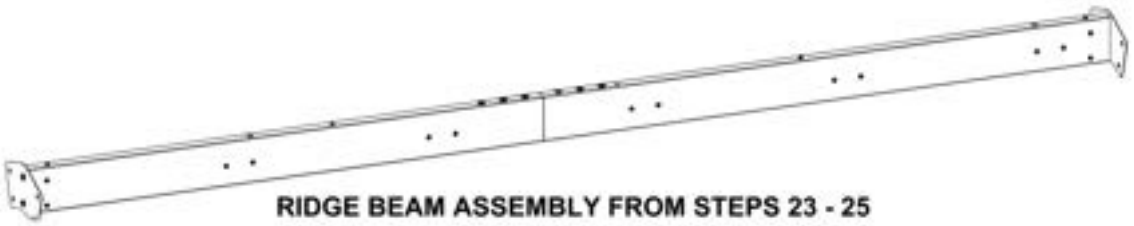

RIDGE BEAM ASSEMBLY FROM STEPS 23 - 25

- WITH AT LEAST TWO PEOPLE, ATTACH RIDGE ASSEMBLY TO GABLE UPRIGHTS.
- RIDGE BEAM ASSEMBLY MUST BE ORIENTED AS SHOWN BELOW WITH LONG OVERHANG TOWARD THE FRONT

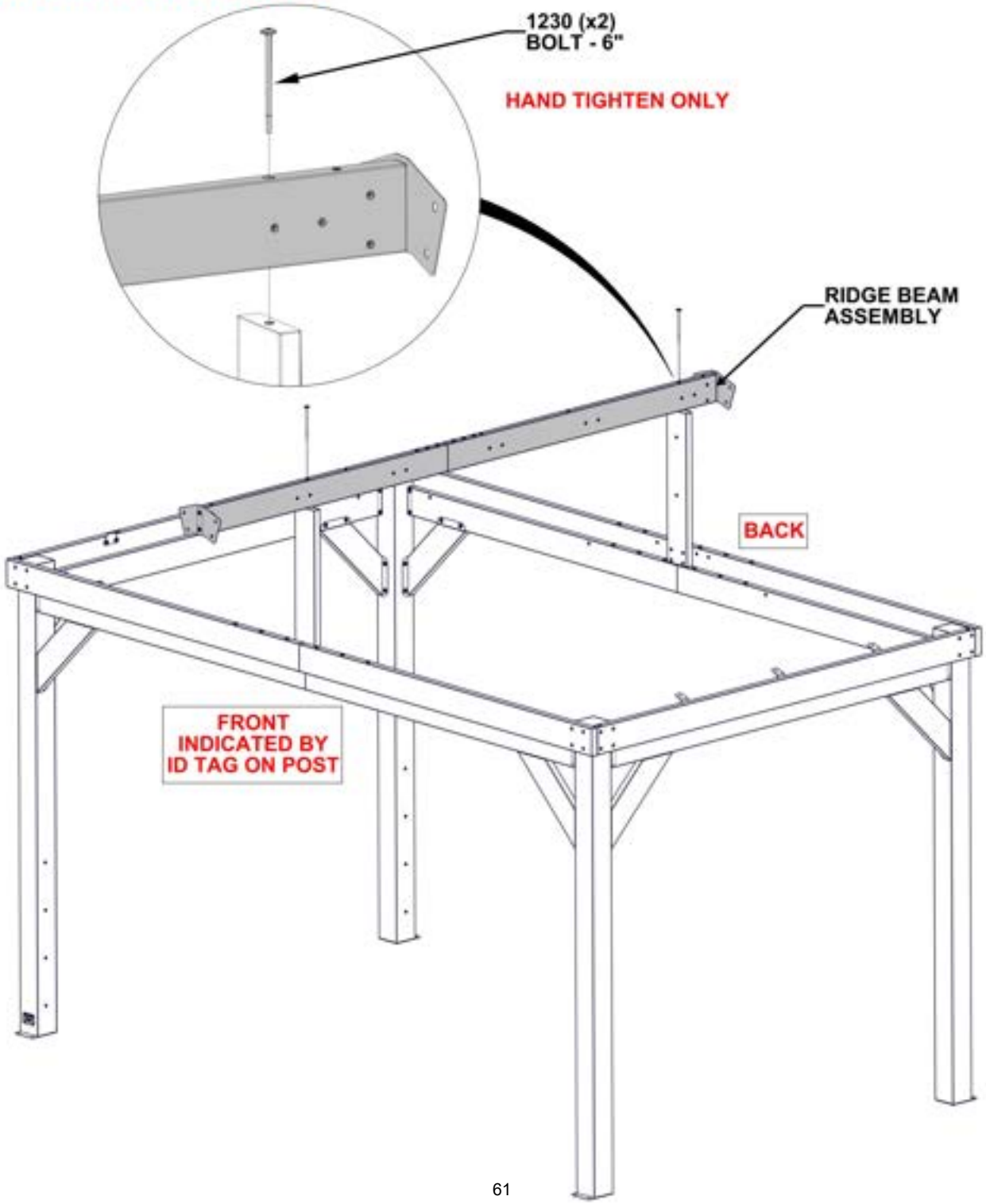

STEP 27 - RIDGE ASSEMBLY

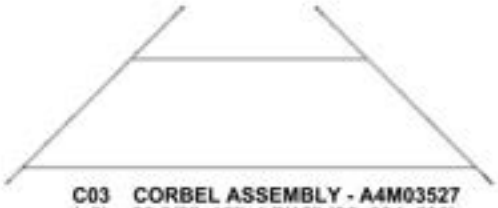

C03 CORBEL ASSEMBLY - A4M03527
(x2) 23 3/8"x12"x1 7/16" (36x304x593)

QTY	PartNo	DESCRIPTION
8	H101202	TORX PAN HEAD 1/4-20x3/4 ASSY

- IT IS RECOMMENDED TO USE PROVIDED ANGLE DRIVER TO INSTALL HARDWARE IN THIS STEP.
- ATTACH CORBELS TO RIDGE BEAM AND GABLE ARMS.
- SQUARE AS NEEDED BEFORE TIGHTENING ALL HARDWARE FROM PREVIOUS STEPS.

1202 (x8)
TORX PAN HEAD 1/4-20x3/4 ASSY

TIGHTEN ALL HARDWARE

CORBEL BRACKET HOLES WILL FIT AROUND THREADED INSERTS AND FLUSH AGAINST RIDGE BEAM AND GABLE

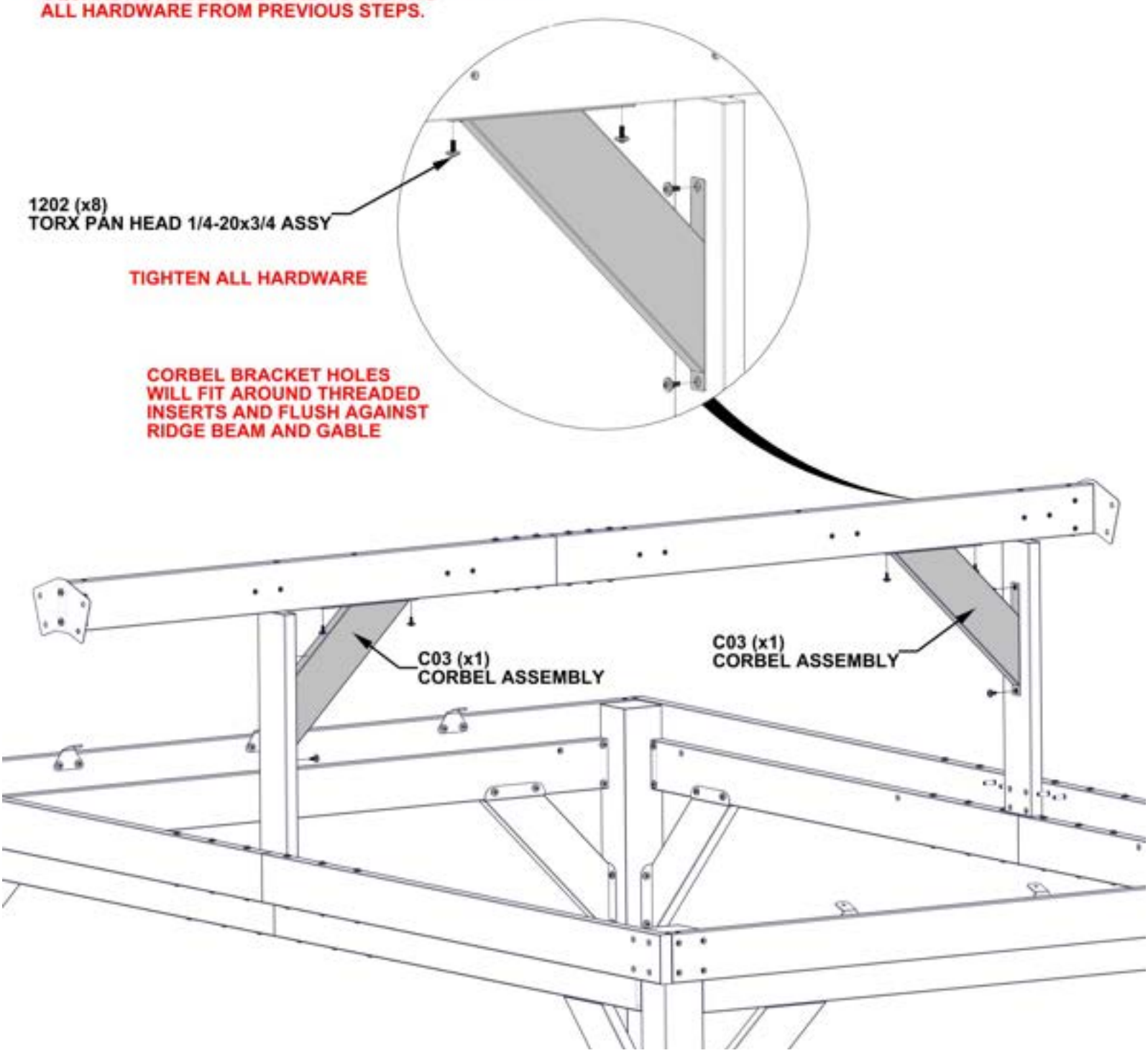

STEP 28A - RIDGE ASSEMBLY

QTY	PartNo	DESCRIPTION
3	H101053	STEEL WASHER 6x20
3	H101054	SEALANT WASHER
3	H101293	TORX PAN HEAD 1/4-20x1 3/8"

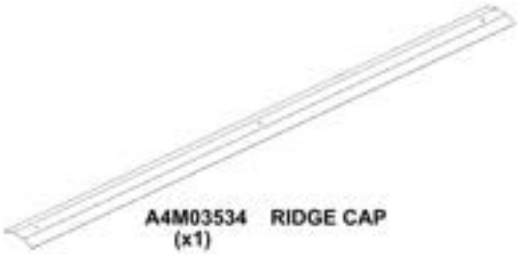

A4M03534 RIDGE CAP
(x1)



J10 SUPPORT RING - A4M03808
(x3) 13/16"x7/16" (11x20x)

- REMOVE PROTECTIVE FILM.
- ORIENT RIDGE CAP AS SHOWN BELOW.
- WARNING: GLOVES ARE RECOMMENDED WHEN HANDLING STEEL ROOF PIECES.

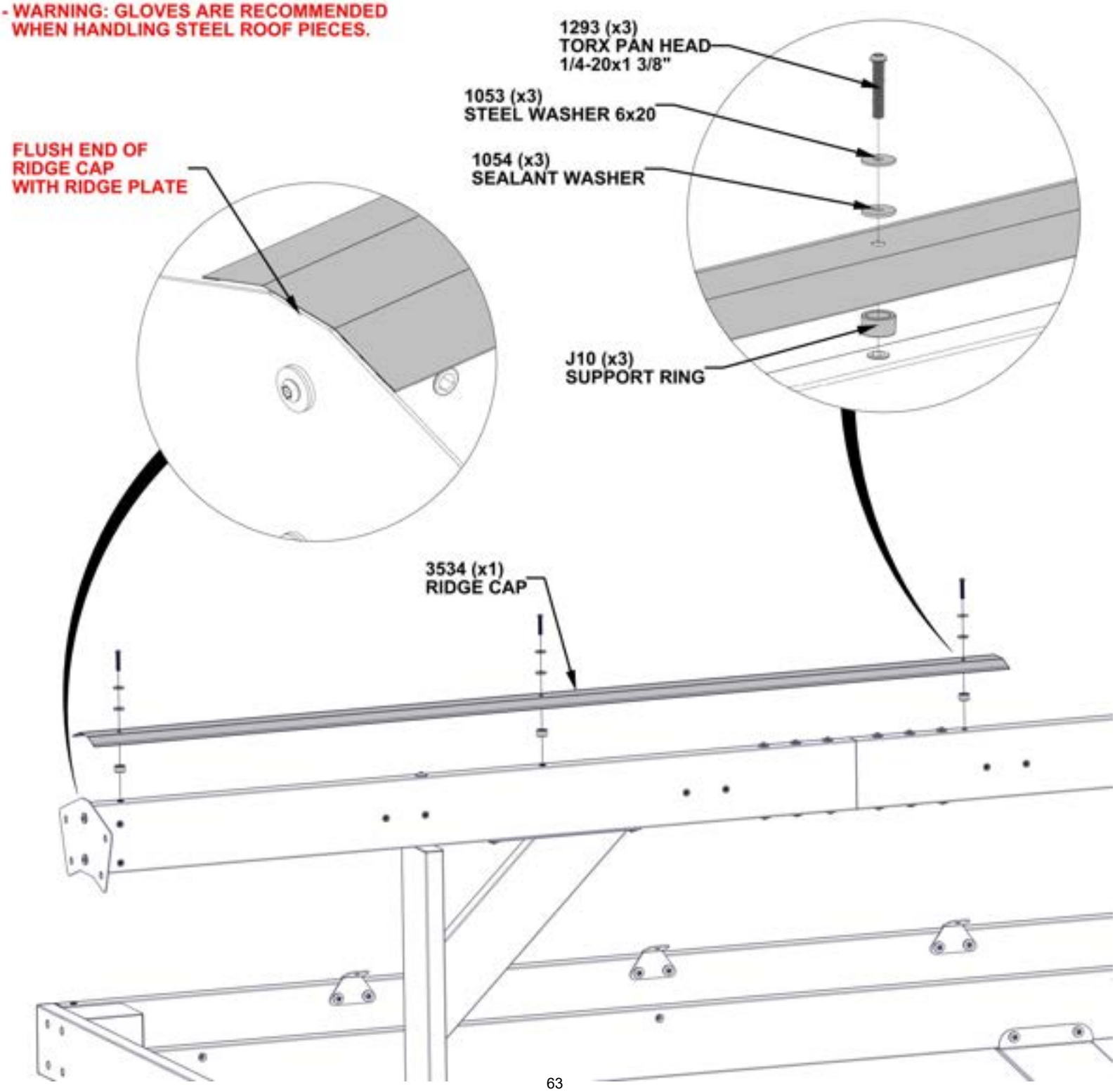

STEP 28B - RIDGE ASSEMBLY



A4M03535 RIDGE CAP SPLICE
(x1)

- REMOVE PROTECTIVE FILM.
- ORIENT RIDGE CAP SPLICE AS SHOWN BELOW.
- WARNING: GLOVES ARE RECOMMENDED WHEN HANDLING STEEL ROOF PIECES.

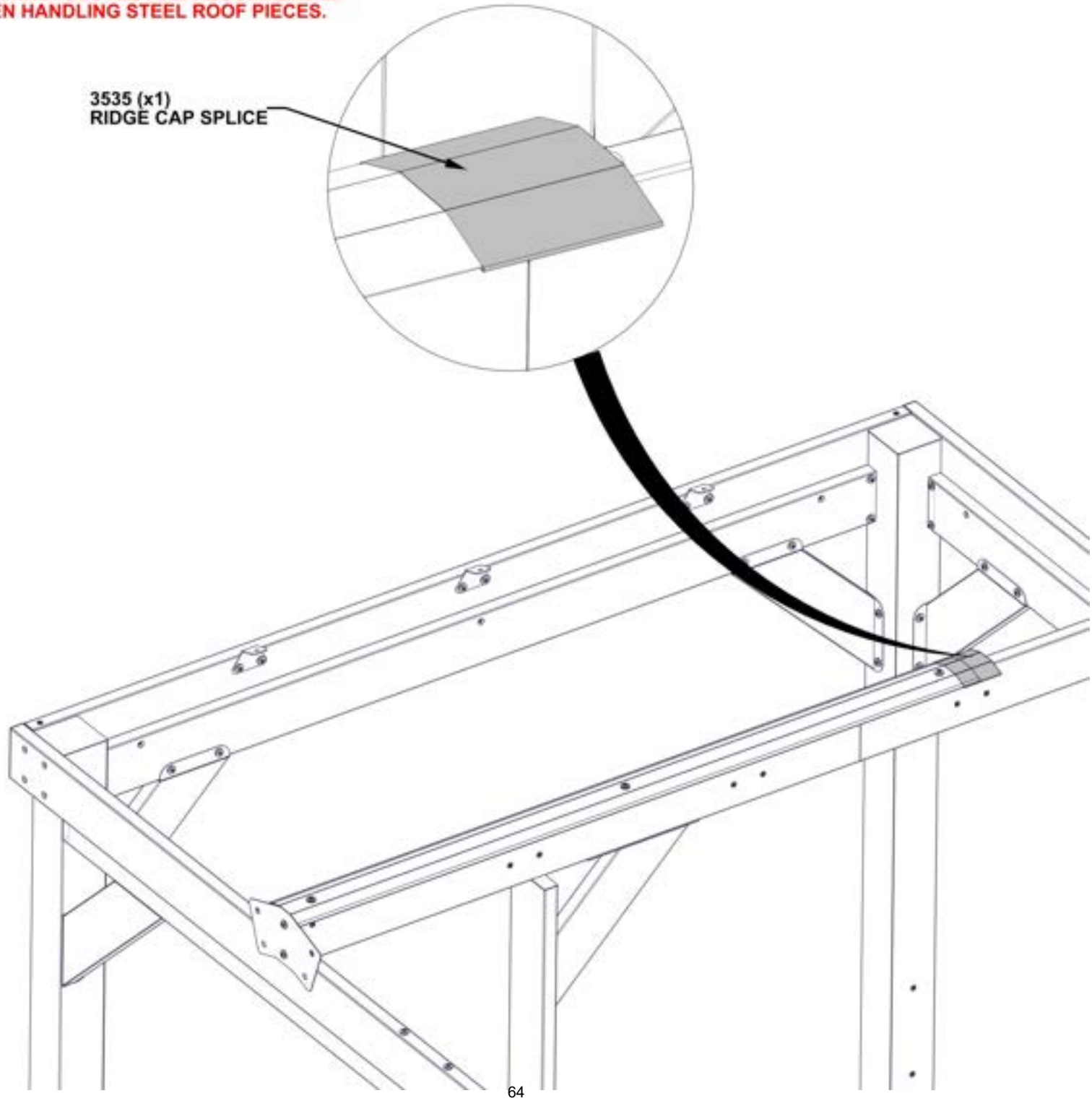

STEP 28C - RIDGE ASSEMBLY

QTY	PartNo	DESCRIPTION
2	H101053	STEEL WASHER 6x20
2	H101054	SEALANT WASHER
2	H101293	TORX PAN HEAD 1/4-20x1 3/8"

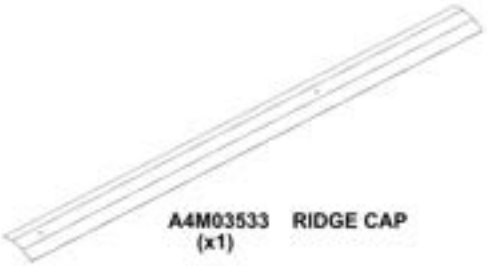

A4M03533 RIDGE CAP
(x1)



J10 SUPPORT RING - A4M03808
(x2) 13/16"x7/16" (11x20x)

- REMOVE PROTECTIVE FILM.
- ORIENT RIDGE CAP AND SLIDE INTO RIDGE CAP SPLICE AS SHOWN BELOW.
- WARNING: GLOVES ARE RECOMMENDED WHEN HANDLING STEEL ROOF PIECES.

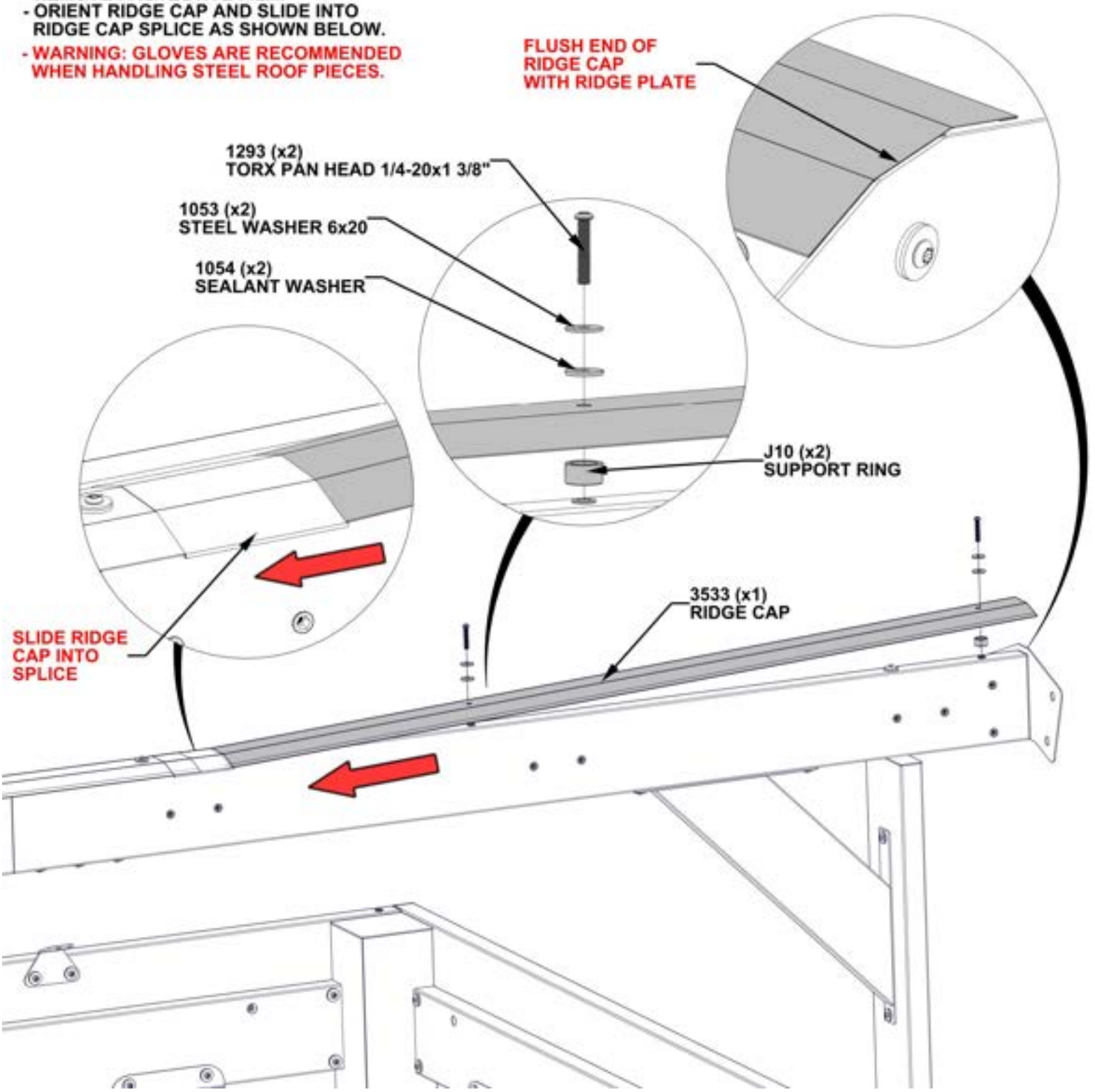

STEP 29 - ROOF ASSEMBLY



J7 RAFTER BRACKET - A4M03802
(x4) 3 5/8"x2 3/16"x2" (50x55x92)

QTY	PartNo	DESCRIPTION
4	H101202	TORX PAN HEAD 1/4-20x3/4 ASSY

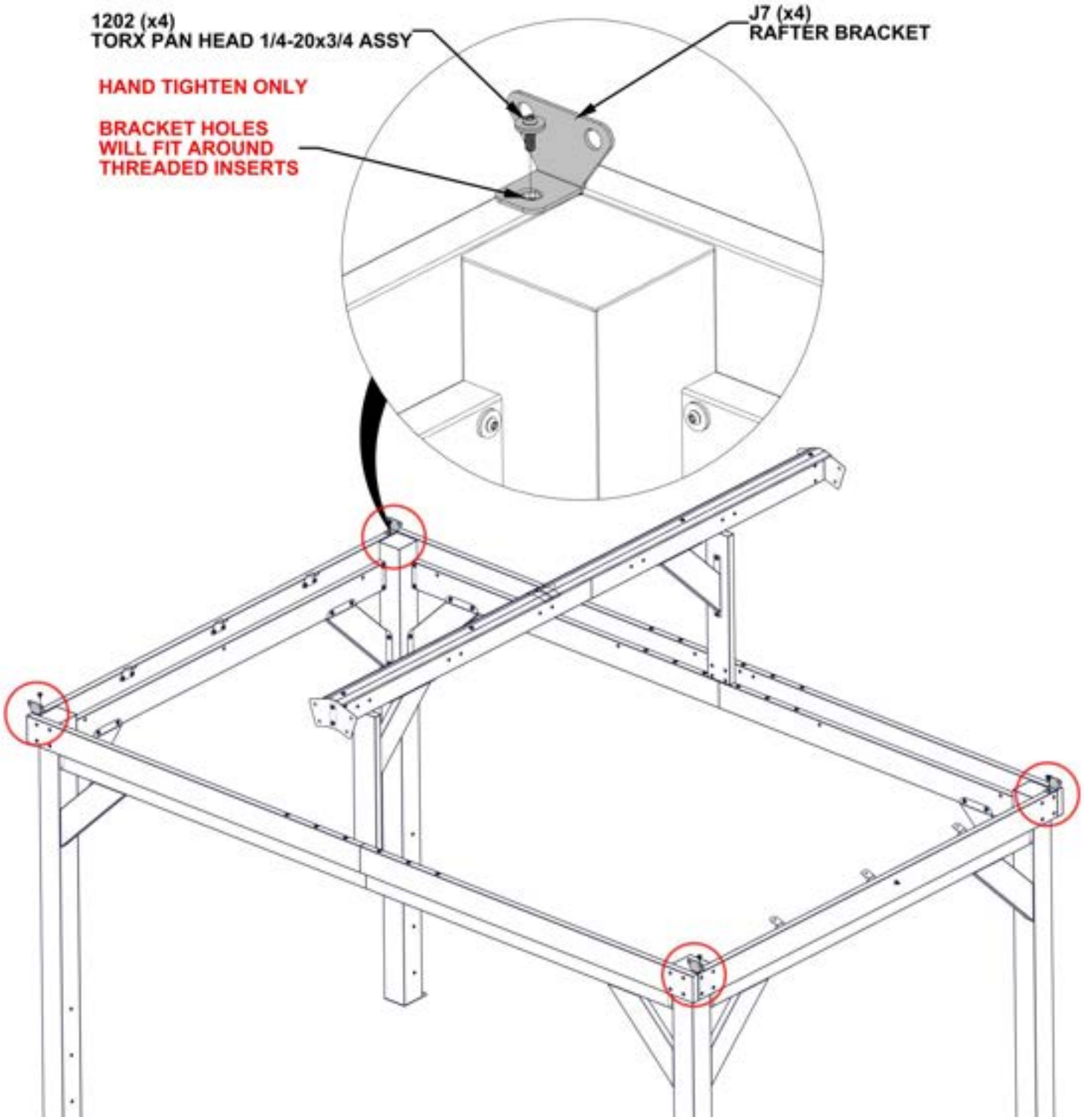

STEP 30 - ROOF ASSEMBLY

QTY	PartNo	DESCRIPTION
16	H101202	TORX PAN HEAD 1/4-20x3/4 ASSY



R01 RAFTER ASSEMBLY - A4M03522
(x2) 86 3/8"x4 5/16"x3 1/8" (80x110x2194.6)



R02 RAFTER ASSEMBLY - A4M03523
(x2) 86 3/8"x4 5/16"x3 1/8" (80x110x2194.6)

- INSERTS ON THE SIDE OF EACH RAFTER MUST FACE TOWARD THE INSIDE OF THE STRUCTURE.
- ATTACH EACH RAFTER AT THE RIDGE AS SHOWN BELOW.
- ONCE SUPPORTED, ATTACH END OF RAFTER TO RAFTER BRACKETS AT TOP OF EACH POST.

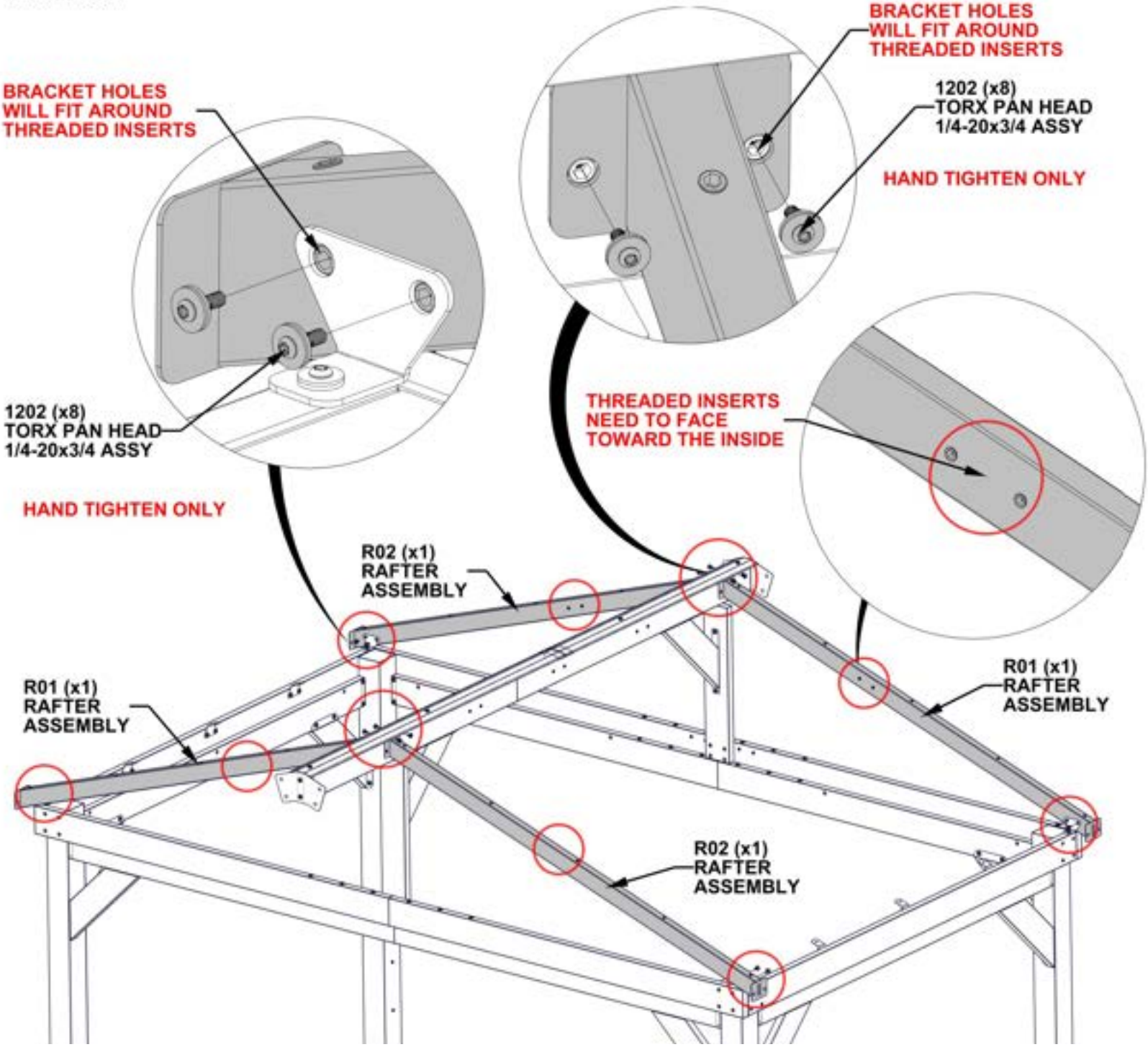

STEP 31 - ROOF ASSEMBLY

QTY	PartNo	DESCRIPTION
16	H101103	TORX SOCKET SCREW 1/4-20



B08 GABLE ARM ASSEMBLY - A4M03514
(x2) 40 1/16"x5 1/4"x1 7/16" (36x134x1017)



B09 GABLE ARM ASSEMBLY - A4M03515
(x2) 40 1/16"x5 1/4"x1 7/16" (36x134x1017)

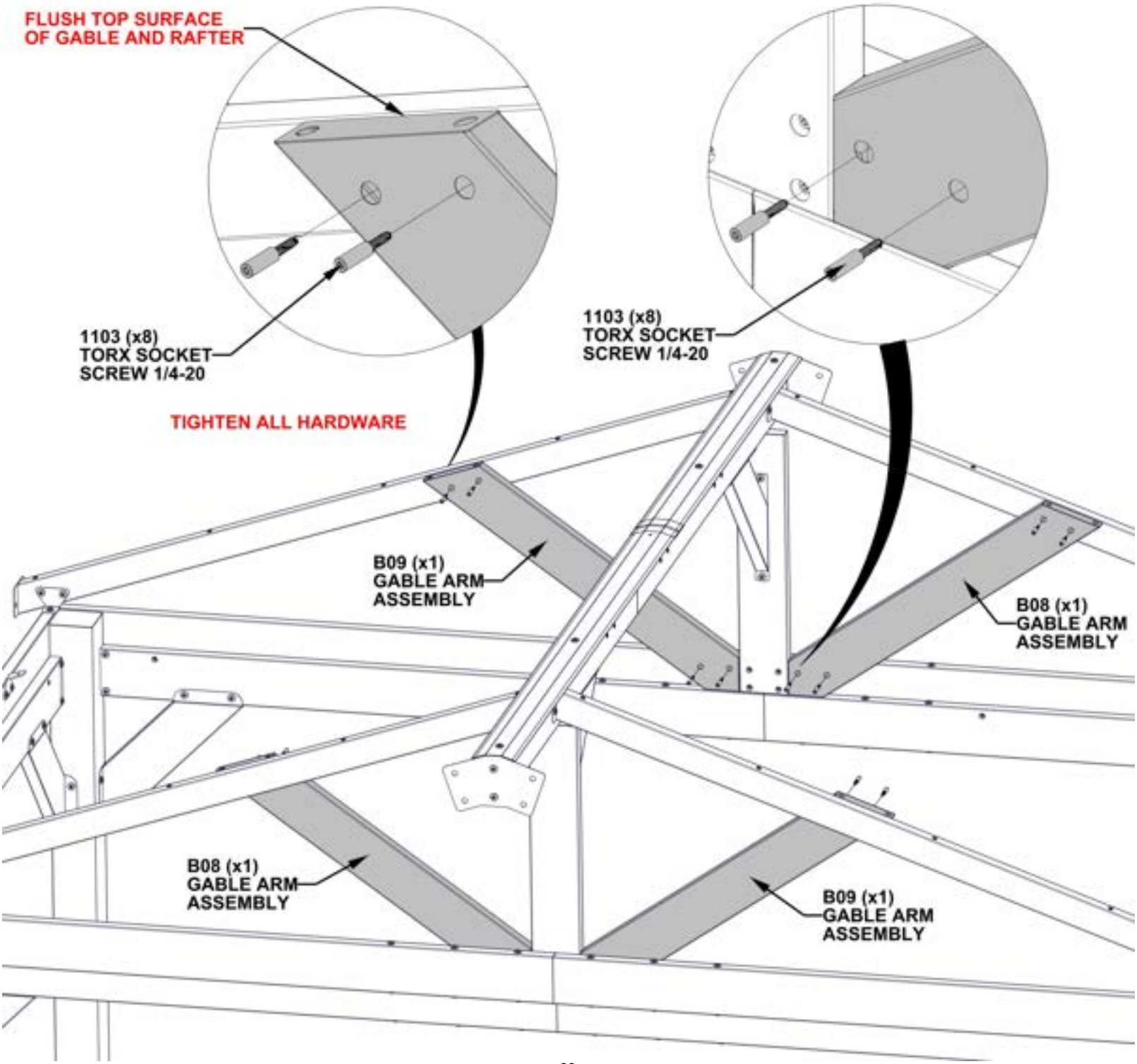

STEP 32A - ROOF ASSEMBLY

QTY	PartNo	DESCRIPTION
12	H101202	TORX PAN HEAD 1/4-20x3/4 ASSY



R03 RAFTER ASSEMBLY - A4M03524
(x6) 86 3/8"x4 5/16"x3 1/8" (80x110x2194.6)

- ATTACH EACH RAFTER AT THE RIDGE AS SHOWN BELOW.

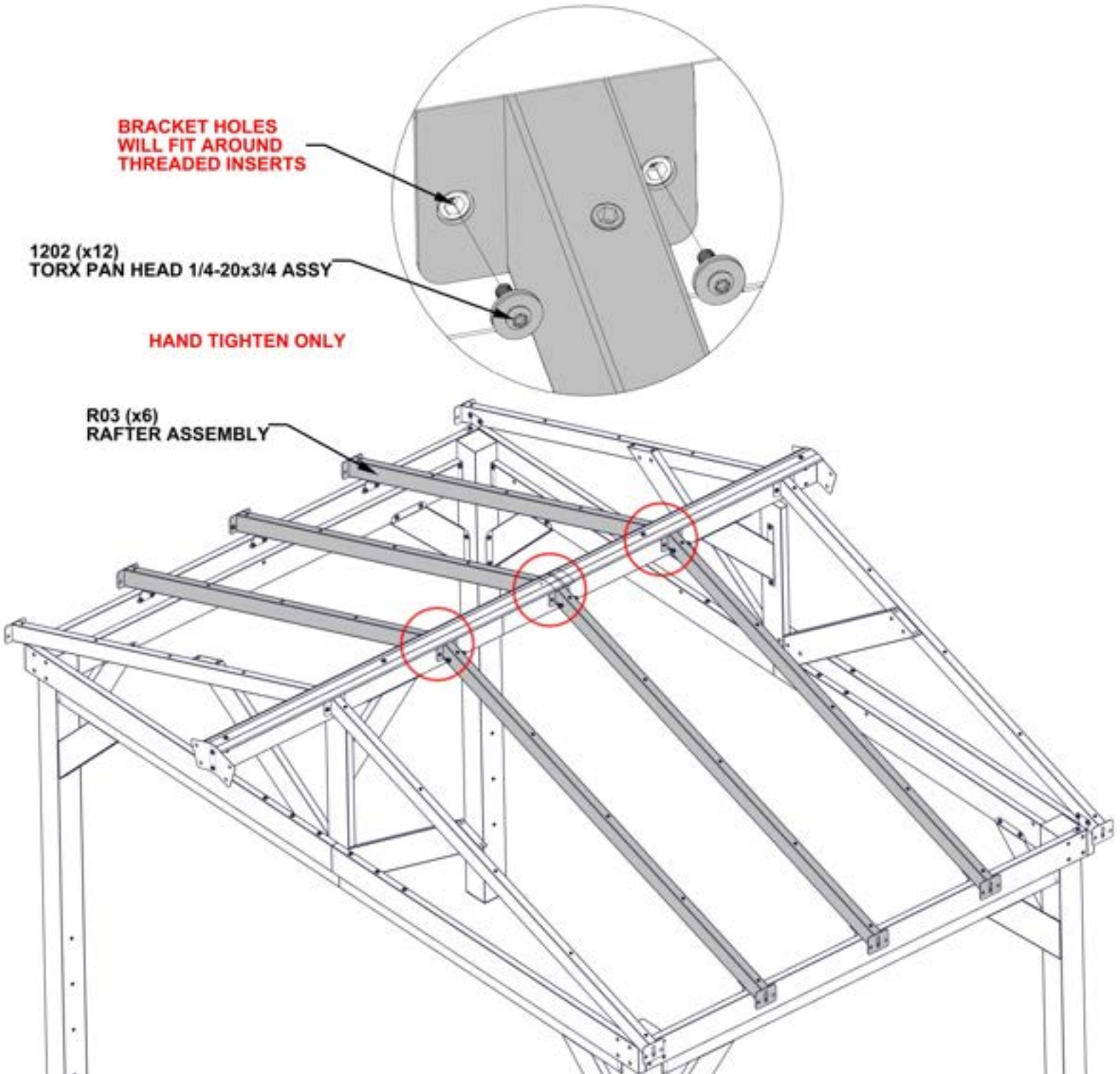

STEP 32B - ROOF ASSEMBLY

QTY	PartNo	DESCRIPTION
6	H101202	TORX PAN HEAD 1/4-20x3/4 ASSY

- ATTACH END OF EACH RAFTER TO BRACKETS ALONG SIDE BEAMS.

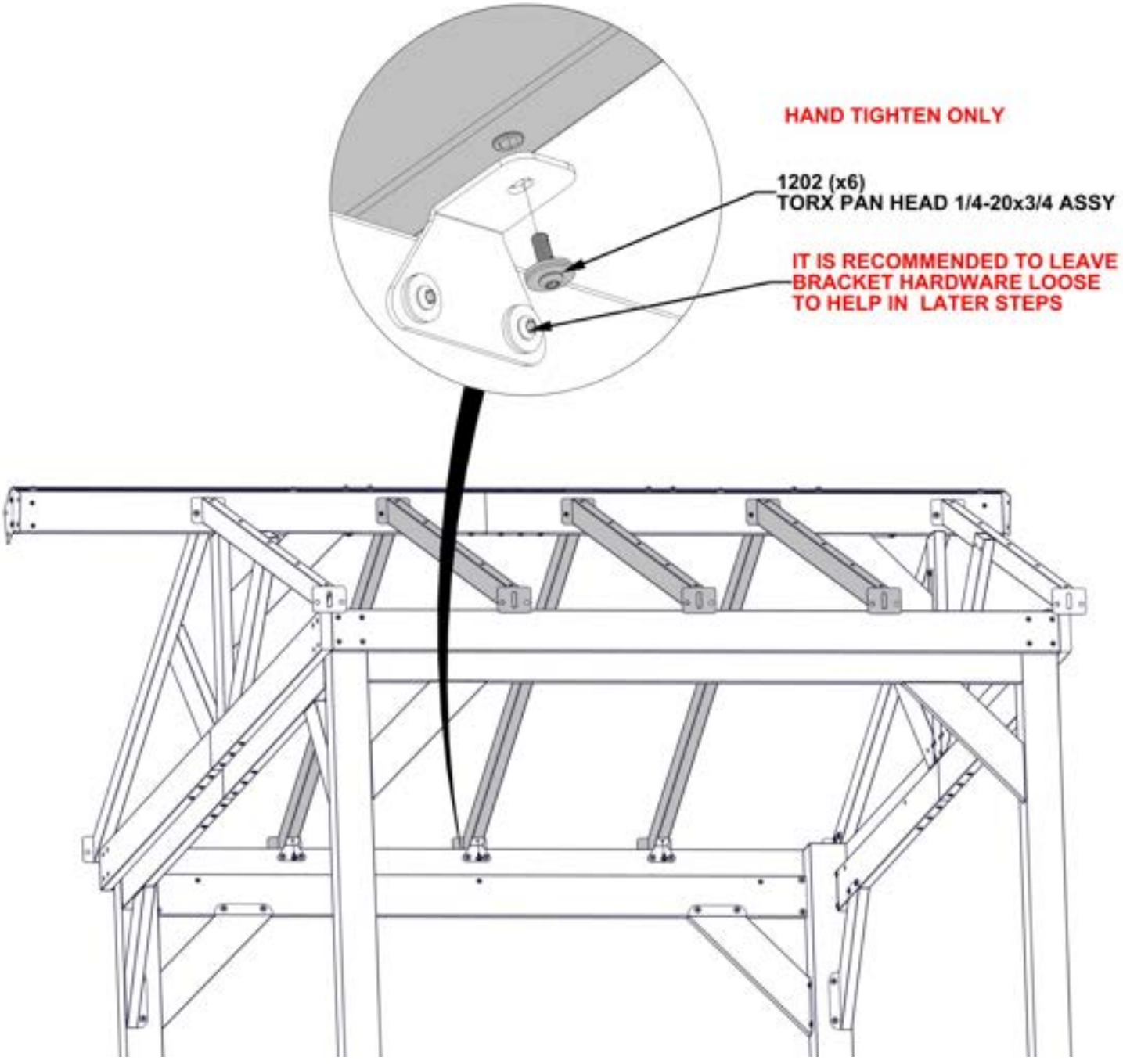

STEP 33 - BEAM ASSEMBLY

QTY	PartNo	DESCRIPTION
12	H101202	TORX PAN HEAD 1/4-20x3/4 ASSY



B15 DRIP BEAM ASSEMBLY - A4M03521
(x2) 71 3/4"x4 13/16"x1 7/16" (36x122x1822)



J6 SPLICE BRACKET - A4M03806
(x2) 19 11/16"x4 11/16"x32.5 (32.5x118.5x500)

- FOR EASE OF ASSEMBLY, WE RECOMMEND USING SAW HORSES FOR STEPS 33 - 34.
- REPEAT THIS STEP TWICE

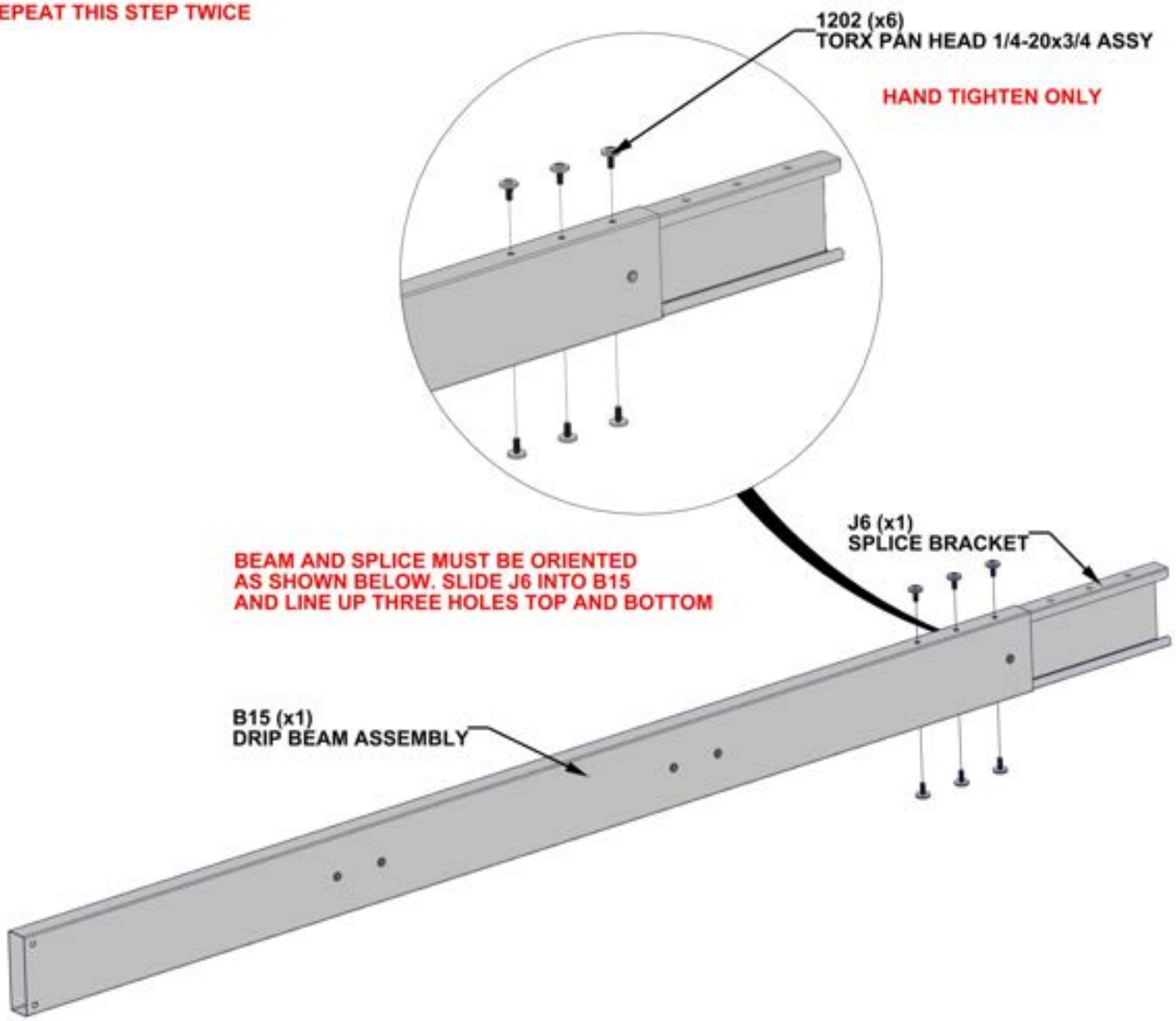

STEP 34 - BEAM ASSEMBLY

QTY	PartNo	DESCRIPTION
12	H101202	TORX PAN HEAD 1/4-20x3/4 ASSY



B14 (x2) DRIP BEAM ASSEMBLY - A4M03520
53 11/16"x4 13/16"x1 7/16" (36x122x1364)

- SLIDE B14 INTO SPLICE BRACKET. GENTLY TAP ENDS OF ASSEMBLY WITH RUBBER MALLET UNTIL GAP CLOSES.
- REPEAT THIS STEP TWICE

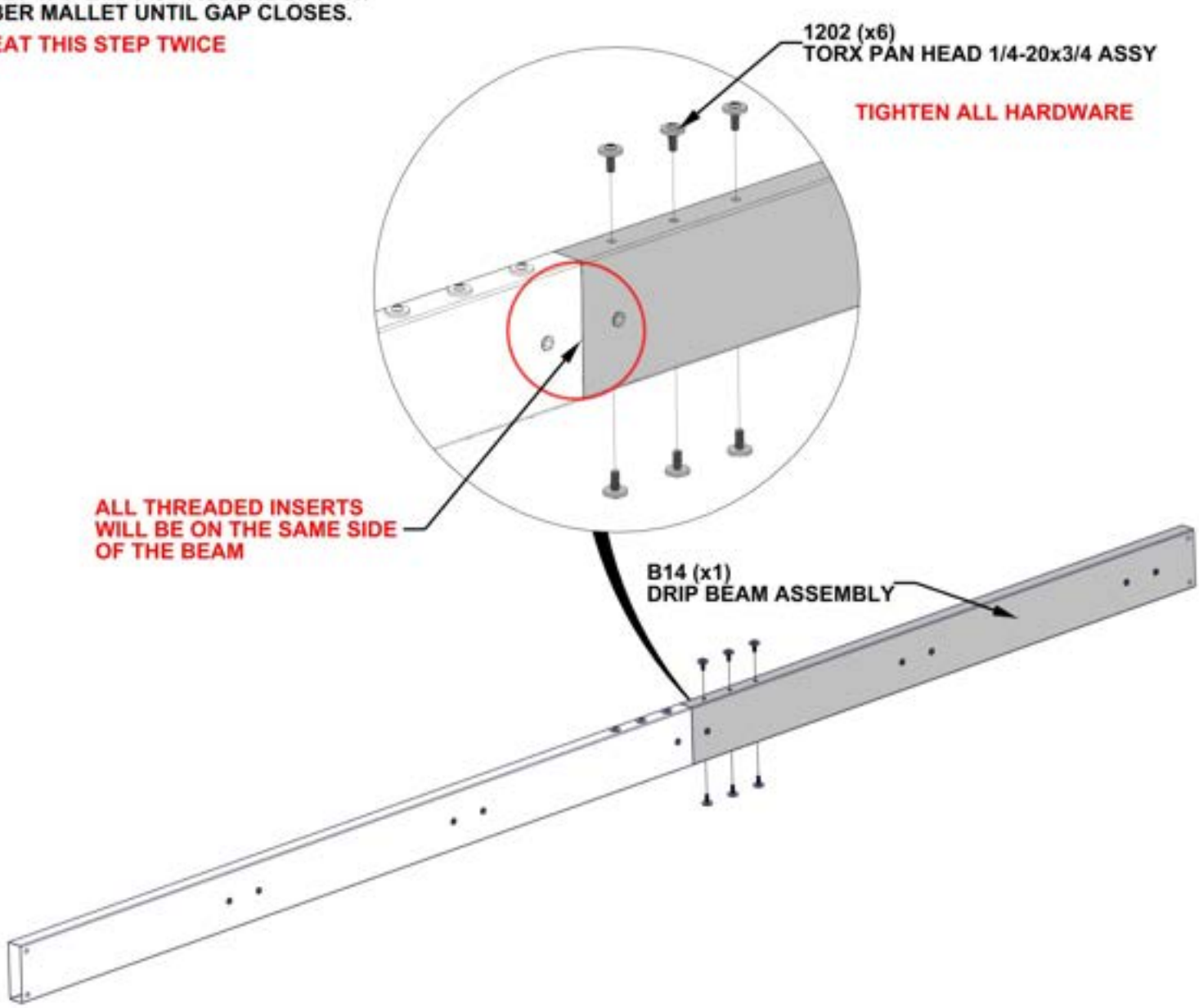

STEP 35 - ROOF ASSEMBLY

QTY	PartNo	DESCRIPTION
20	H101202	TORX PAN HEAD 1/4-20x3/4 ASSY

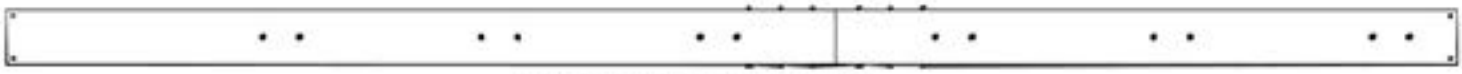

BEAM ASSEMBLIES FROM
STEPS 33 - 34 (x2)

- WITH AT LEAST TWO ADDITIONAL PEOPLE, ATTACH BEAM ASSEMBLY TO RAFTER ENDS.
- BEAM ASSEMBLY MUST BE ORIENTED AS SHOWN BELOW WITH LONG OVERHANG TOWARD THE FRONT

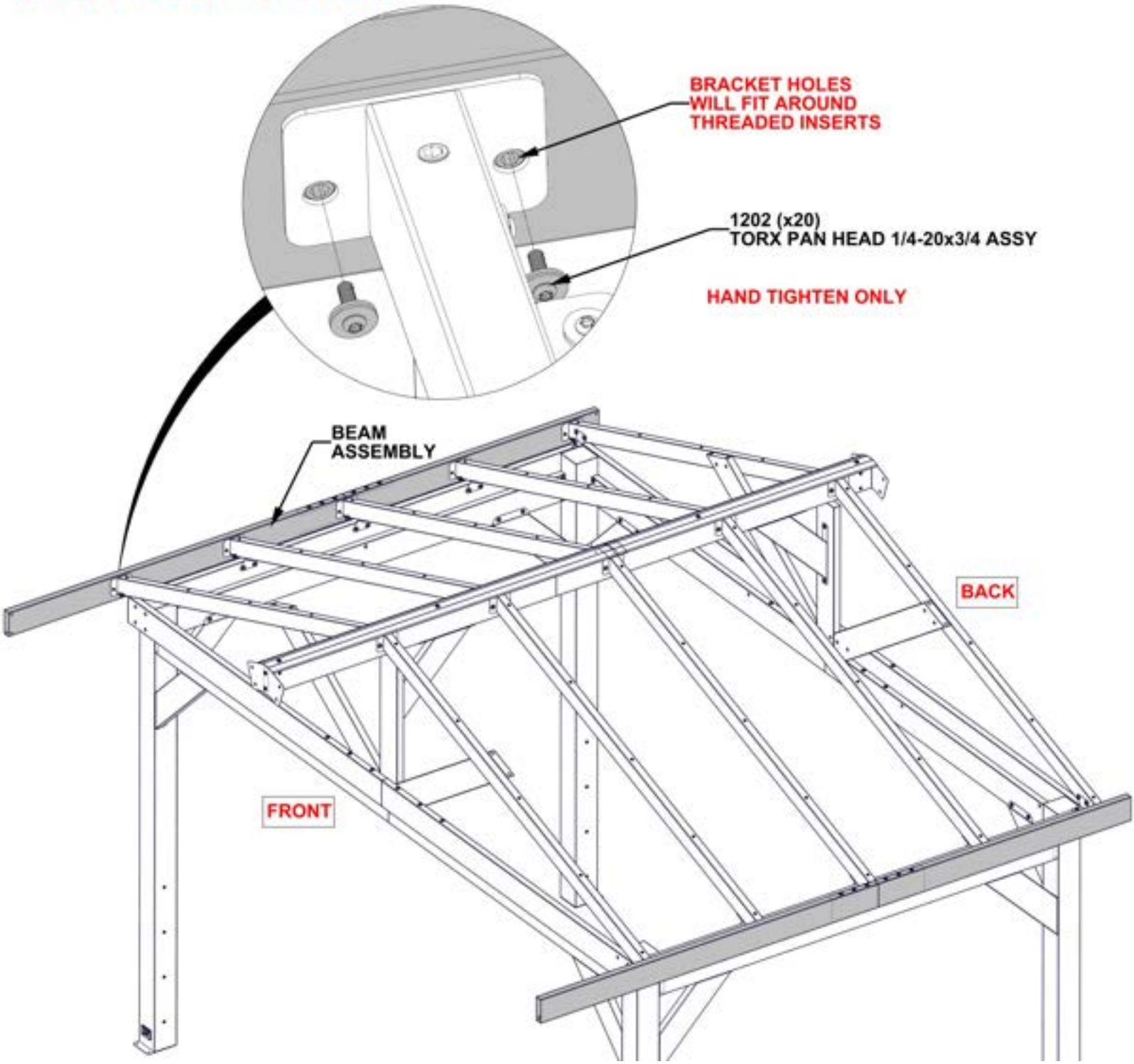

STEP 36 - ROOF ASSEMBLY

QTY	PartNo	DESCRIPTION
4	H101202	TORX PAN HEAD 1/4-20x3/4 ASSY



B13 GABLE BEAM ASSEMBLY - A4M03519
(x2) 88 13/16"x5 1/4"x1 7/16" (36x134x2255)



J9 BEAM BRACKET - A4M03807
(x2) 1"x1 5/16"x4 9/16" (25x33.20x116)

- REPEAT THIS STEP TWICE

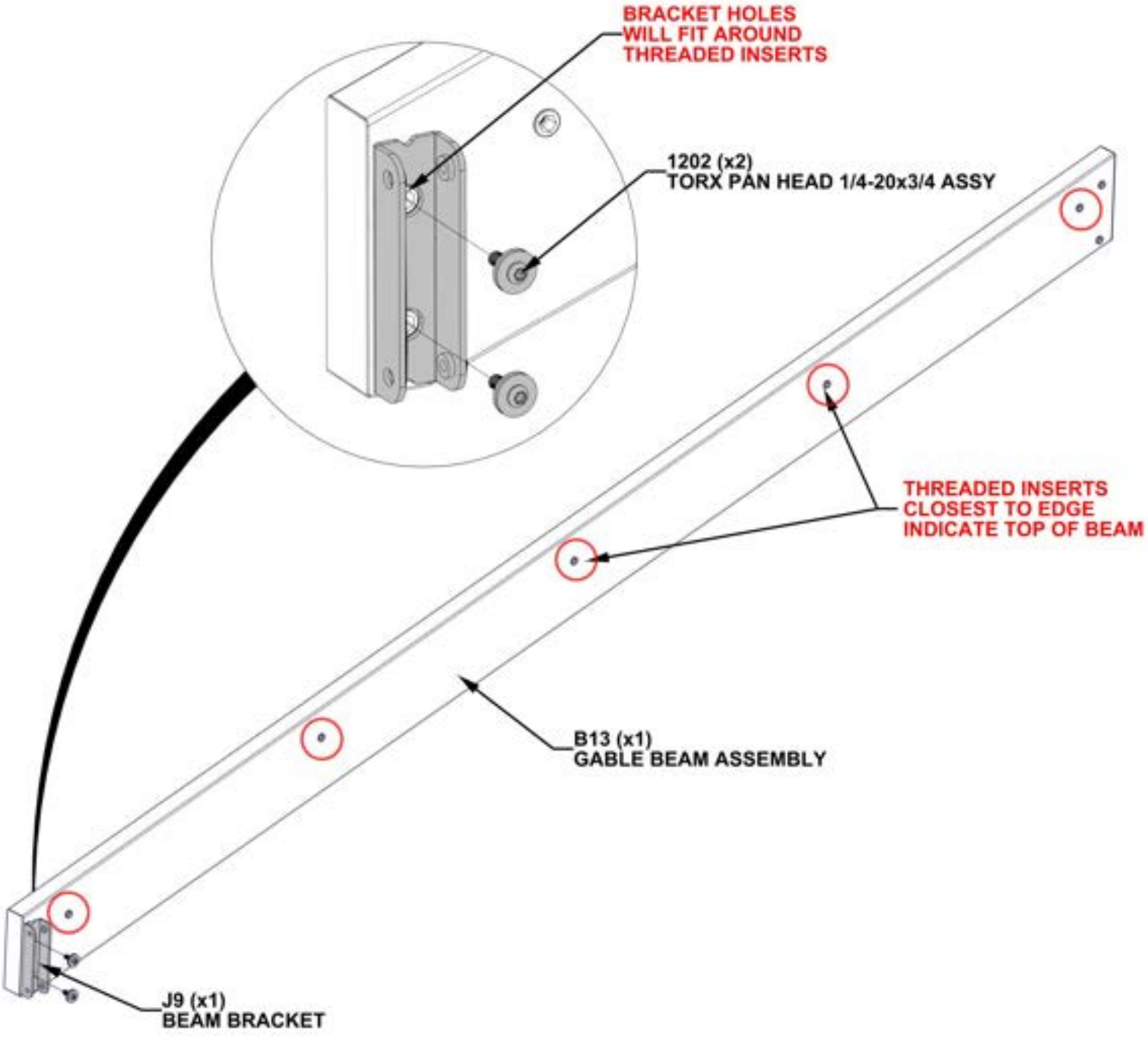

STEP 37 - ROOF ASSEMBLY



J8 GABLE BRACKET - A4M03804
(x2) 4 13/16"x1 9/16"x1 9/16" (40x40x123)

QTY	PartNo	DESCRIPTION
4	H101202	TORX PAN HEAD 1/4-20x3/4 ASSY

- REPEAT THIS STEP TWICE

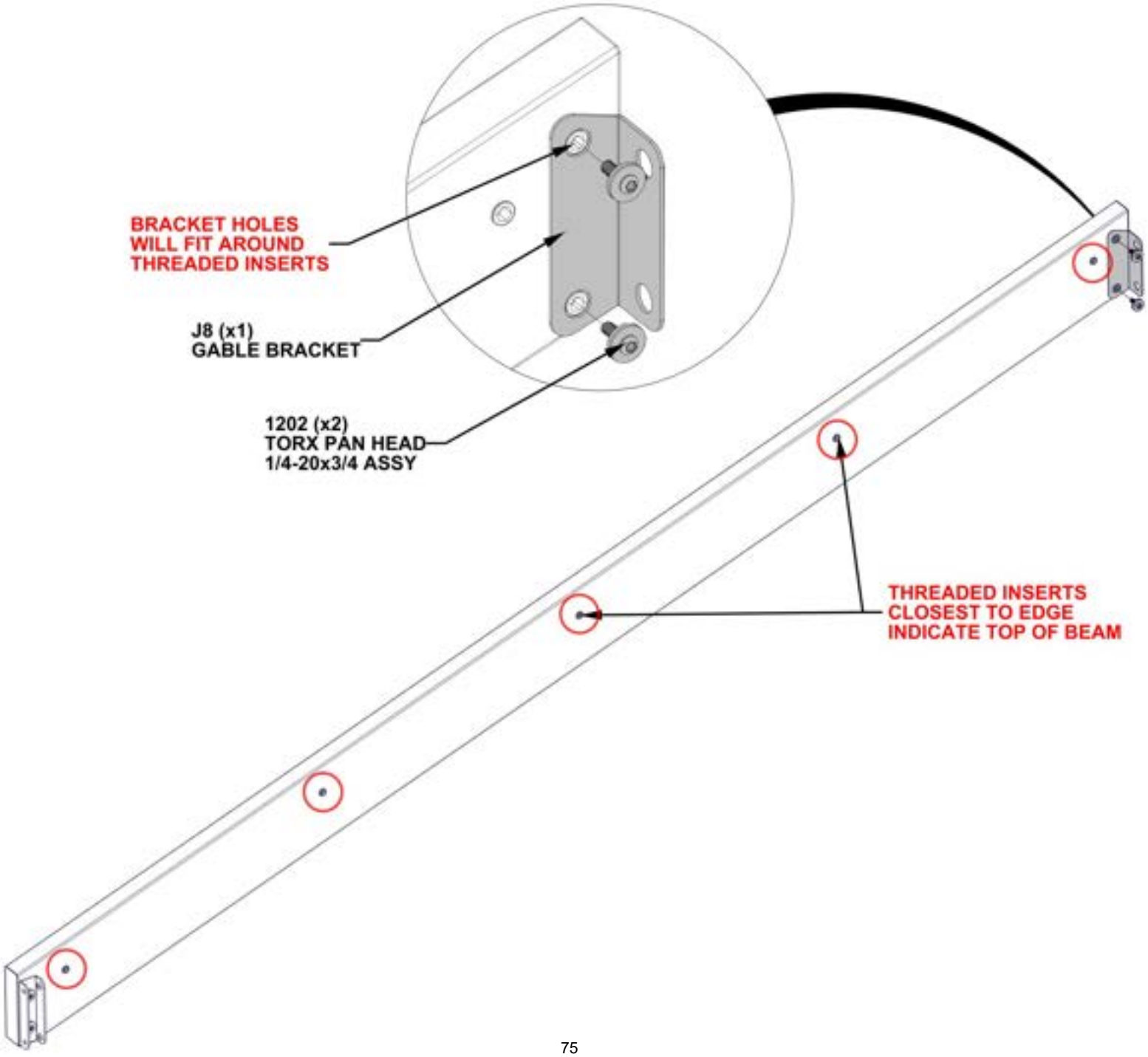

STEP 38A - ROOF ASSEMBLY

QTY	PartNo	DESCRIPTION
4	H101202	TORX PAN HEAD 1/4-20x3/4 ASSY

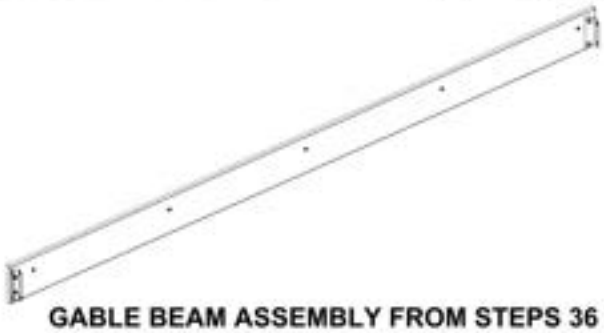

GABLE BEAM ASSEMBLY FROM STEPS 36 - 37

- WITH AT LEAST TWO ADDITIONAL PEOPLE, ATTACH GABLE BEAM ASSEMBLIES.
- REPEAT THIS STEP TWICE FOR BOTH SIDES OF STRUCTURE.
- GABLE BEAM ASSEMBLIES WILL BE ATTACHED ON OPPOSITE SIDES OF ROOF STRUCTURE.

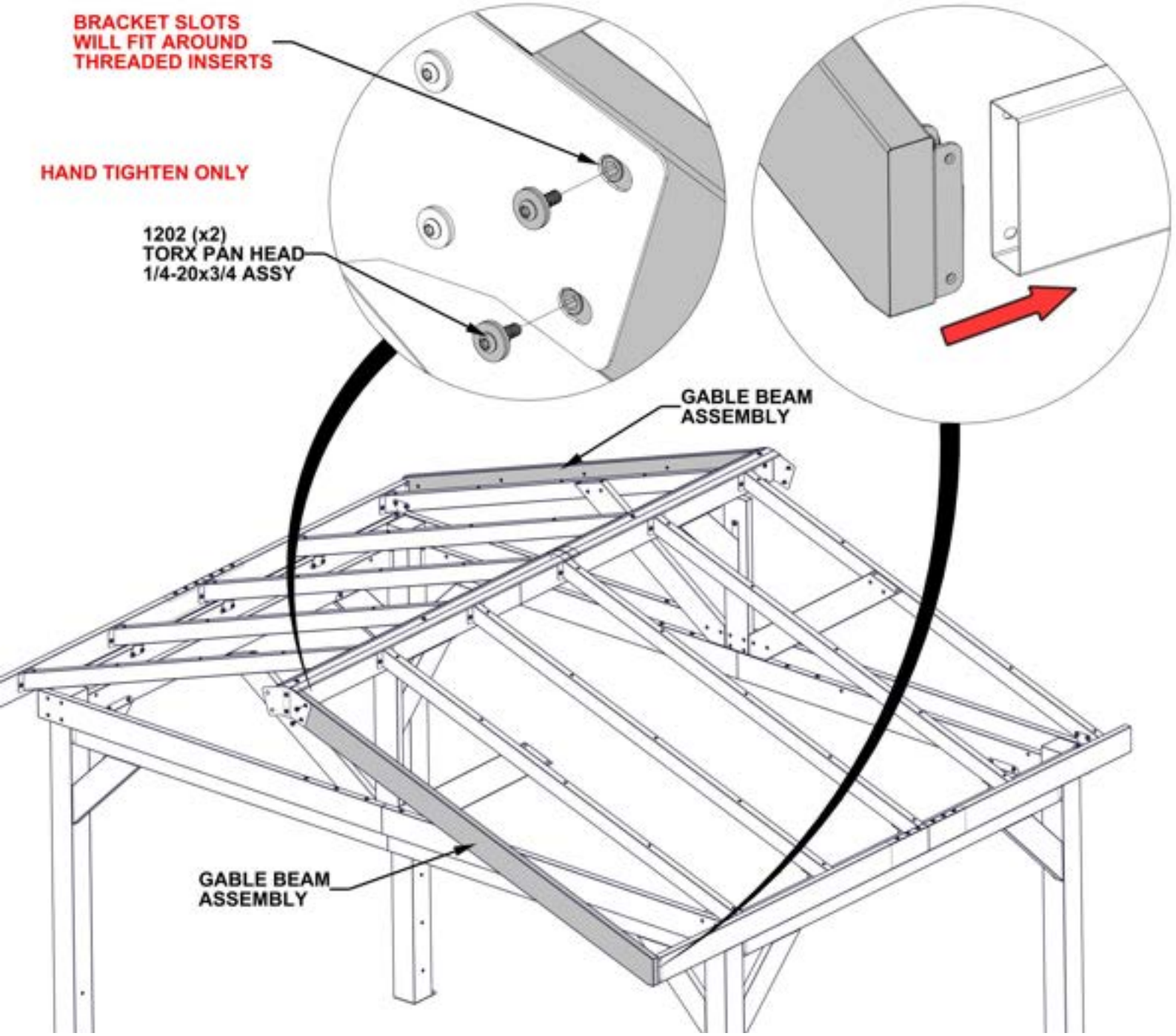

STEP 38B - ROOF ASSEMBLY

QTY	PartNo	DESCRIPTION
8	H101202	TORX PAN HEAD 1/4-20x3/4 ASSY

- REPEAT THIS STEP TWICE FOR BOTH SIDES OF STRUCTURE

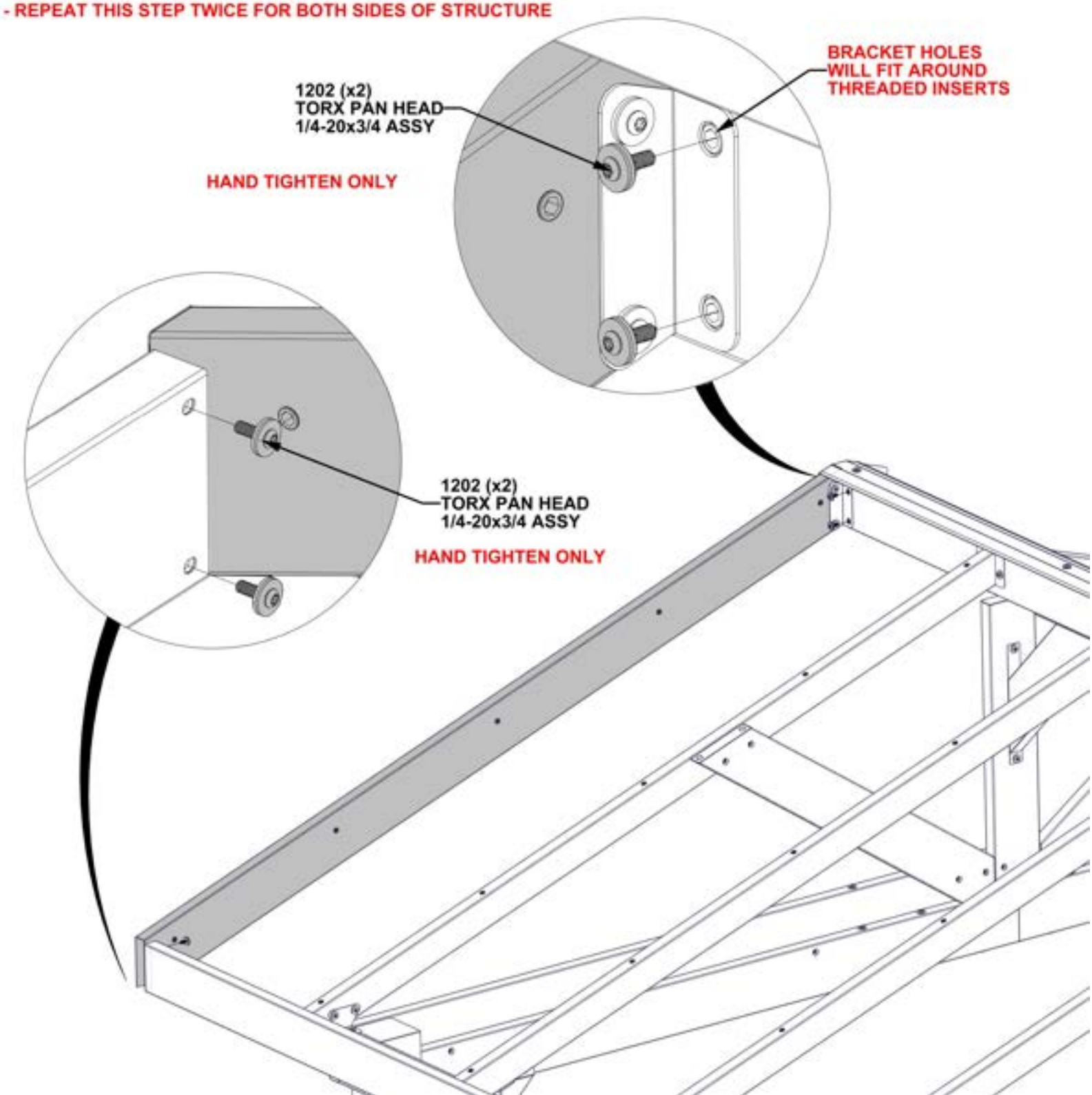

STEP 39 - ROOF ASSEMBLY

QTY	PartNo	DESCRIPTION
4	H101202	TORX PAN HEAD 1/4-20x3/4 ASSY

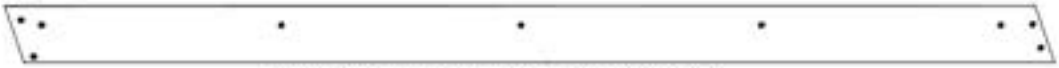

B12 GABLE BEAM ASSEMBLY - A4M03518
(x2) 88 13/16"x5 1/4"x1 7/16" (36x134x2255)



J9 BEAM BRACKET - A4M03807
(x2) 1"x1 5/16"x4 9/16" (25x33.20x116)

- REPEAT THIS STEP TWICE

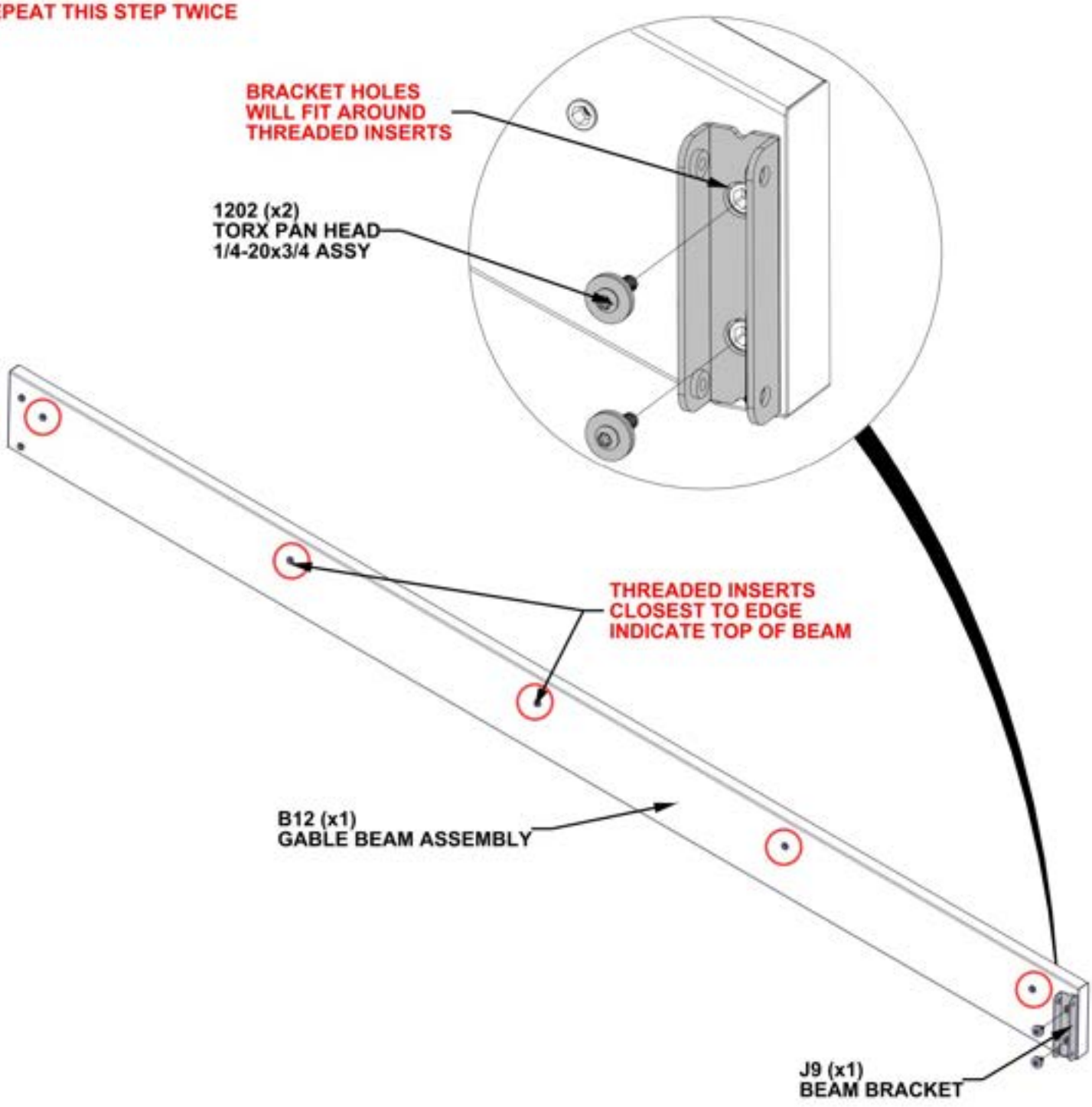

STEP 40 - ROOF ASSEMBLY



J8 GABLE BRACKET - A4M03804
(x2) 4 13/16"x1 9/16"x1 9/16" (40x40x123)

QTY	PartNo	DESCRIPTION
4	H101202	TORX PAN HEAD 1/4-20x3/4 ASSY

- REPEAT THIS STEP TWICE

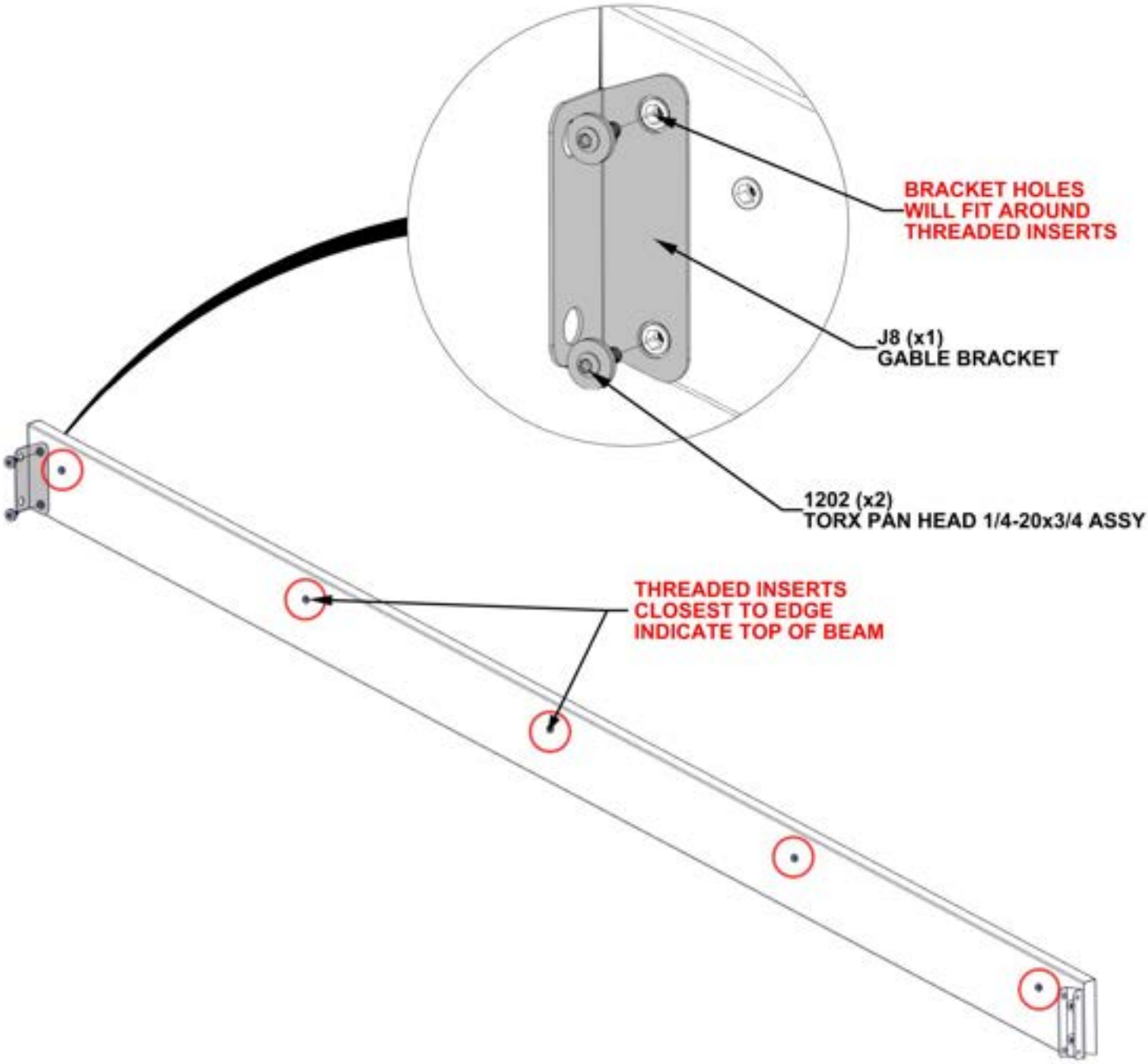

STEP 41A - ROOF ASSEMBLY

QTY	PartNo	DESCRIPTION
4	H101202	TORX PAN HEAD 1/4-20x3/4 ASSY

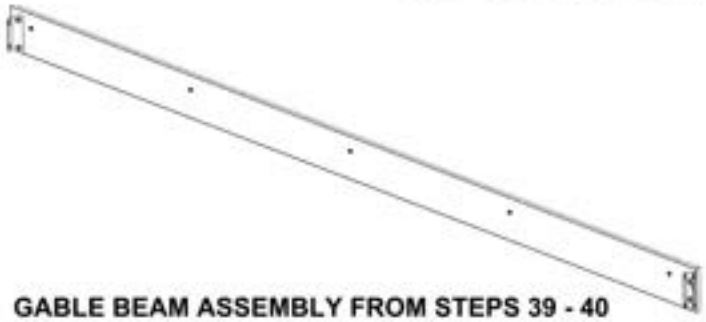

GABLE BEAM ASSEMBLY FROM STEPS 39 - 40

- WITH AT LEAST TWO ADDITIONAL PEOPLE, ATTACH GABLE BEAM ASSEMBLIES.
- REPEAT THIS STEP TWICE FOR BOTH SIDES OF STRUCTURE.
- GABLE BEAM ASSEMBLIES WILL BE ATTACHED ON OPPOSITE SIDES OF ROOF STRUCTURE.

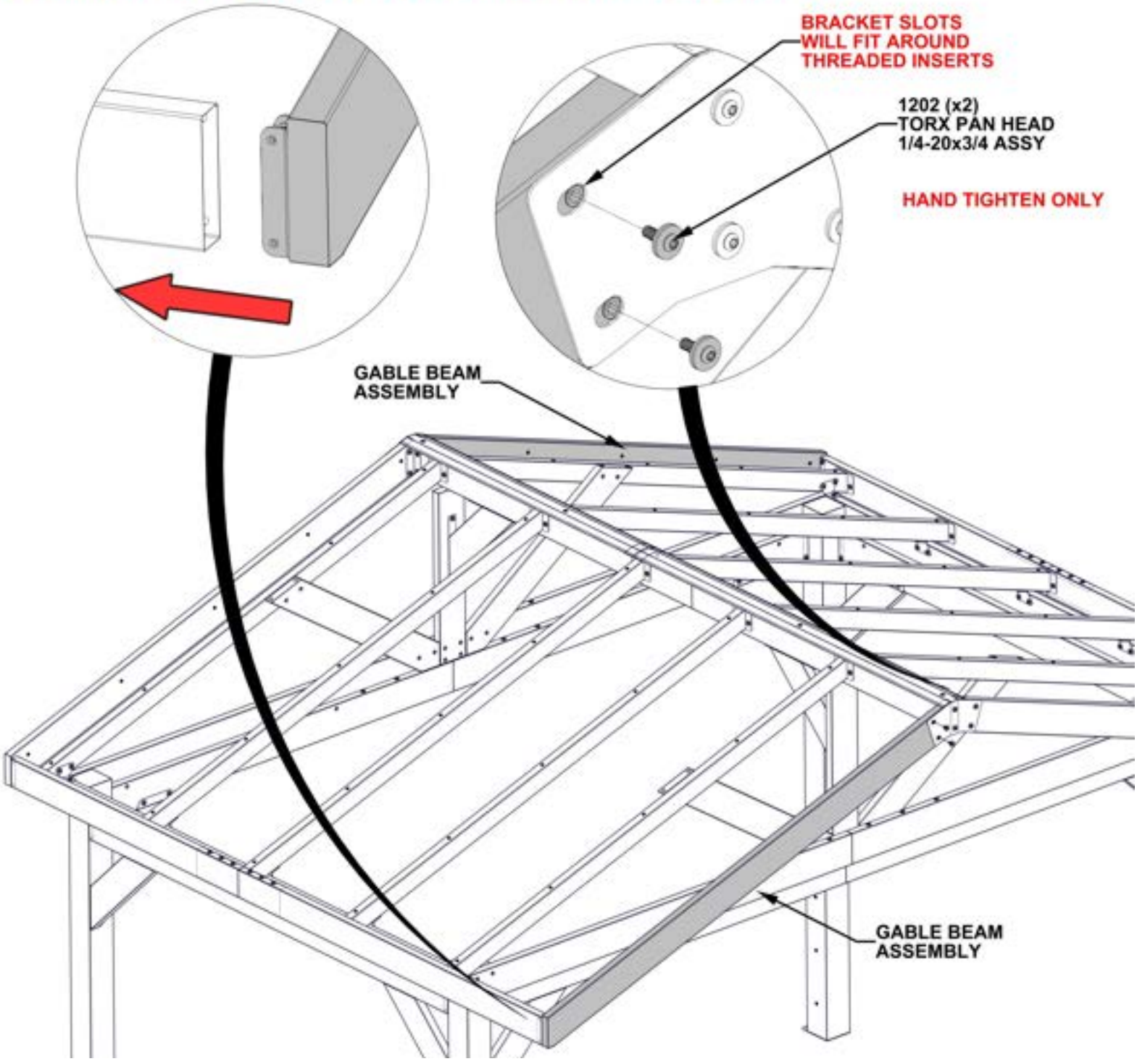

STEP 41B - ROOF ASSEMBLY

QTY	PartNo	DESCRIPTION
8	H101202	TORX PAN HEAD 1/4-20x3/4 ASSY

- REPEAT THIS STEP TWICE FOR BOTH SIDES OF STRUCTURE

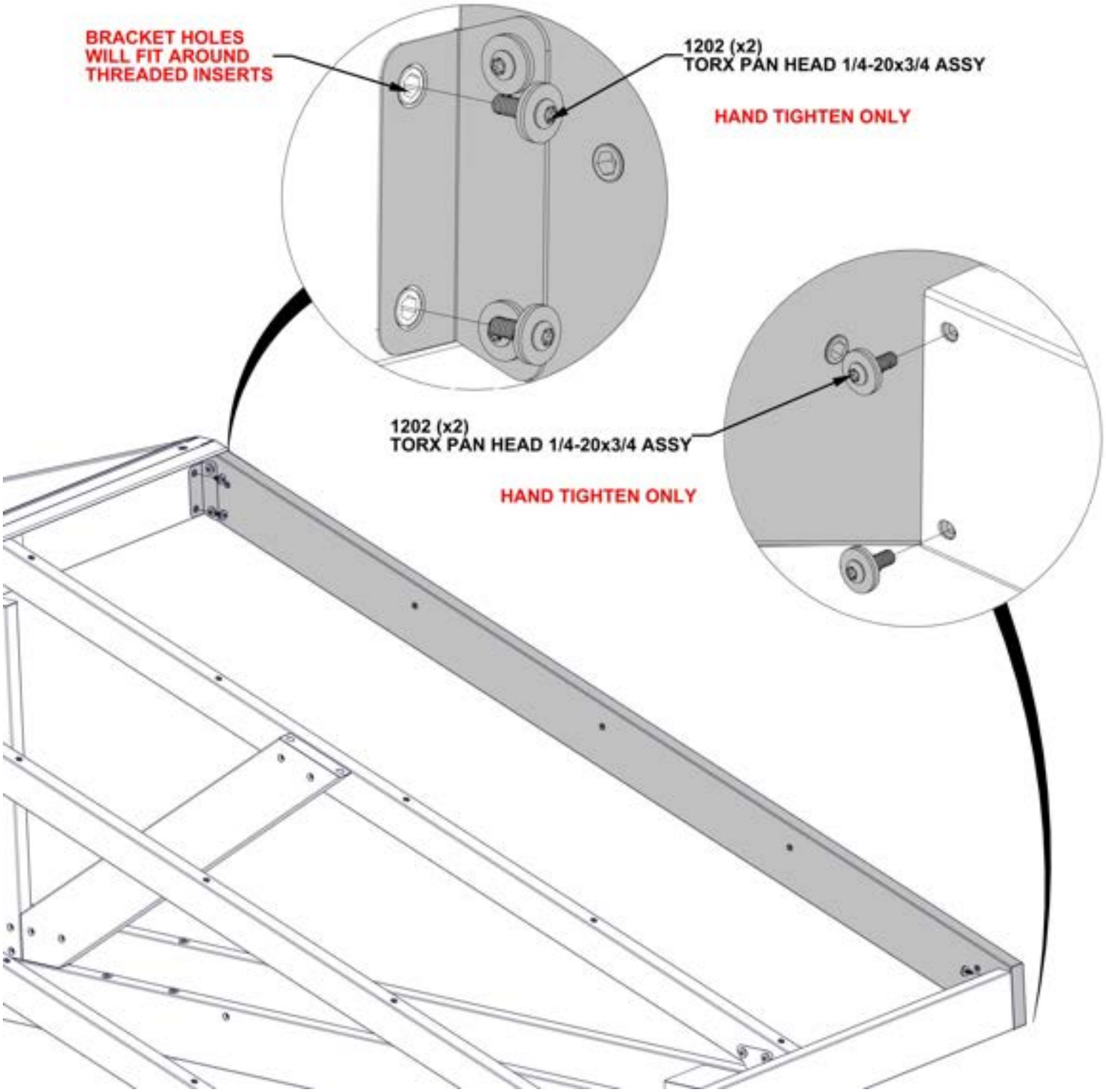

STEP 42 - PURLIN ASSEMBLY



E01 PURLIN ASSEMBLY - A4M03800
(x10) 71 11/16"x1 15/16"x1 9/16" (40x50x1820.60)



A6P00530 2-WAY SQUARE PLUG
(x10)

- COMPLETE THIS STEP TEN TIMES
- USE A RUBBER MALLET TO TAP 2-WAY SQUARE PLUG INTO END OF PURLIN

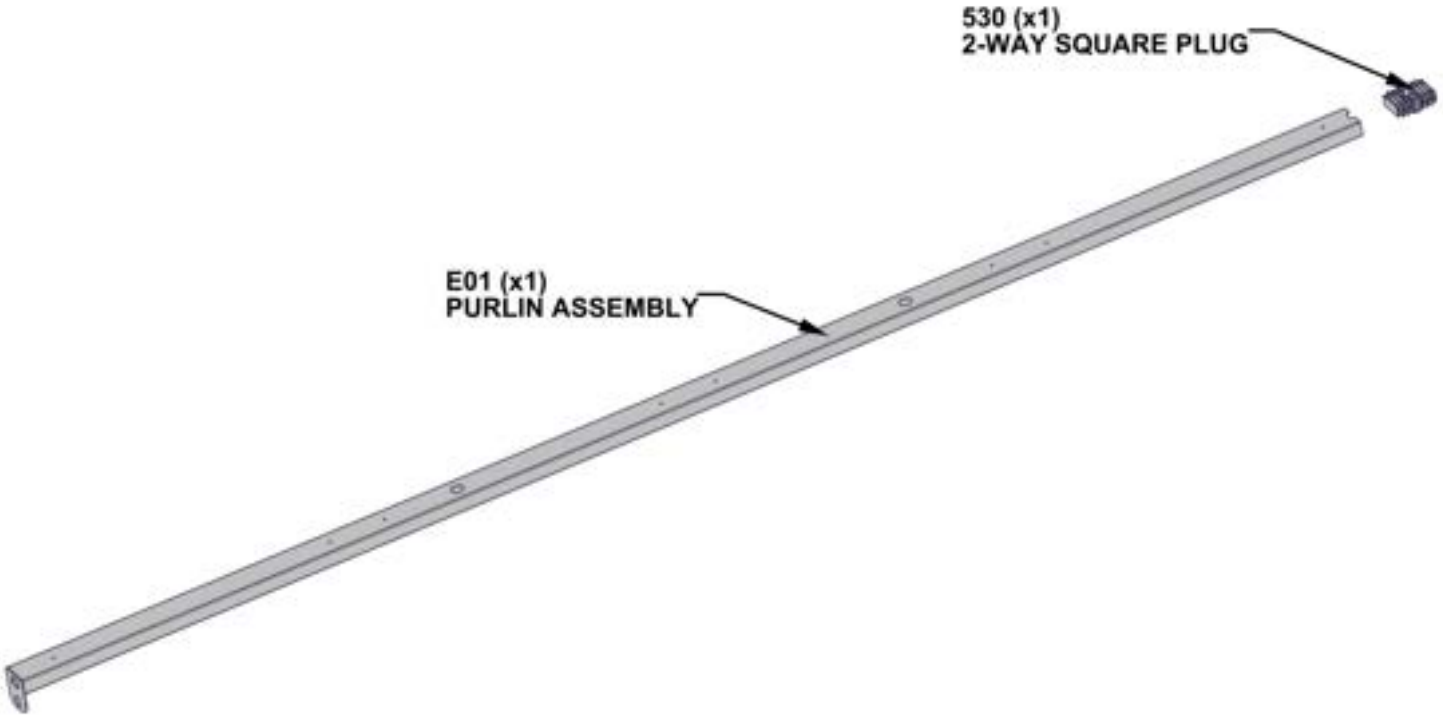

STEP 43 - PURLIN ASSEMBLY



E02 PURLIN ASSEMBLY - A4M03801
(x10) 53 5/8"x1 15/16"x1 9/16" (40x50x1362.40)

- COMPLETE THIS STEP TEN TIMES
- USE A RUBBER MALLET TO TAP ENDS OF EACH PURLIN UNTIL TIGHT AGAINST 2-WAY PLUG

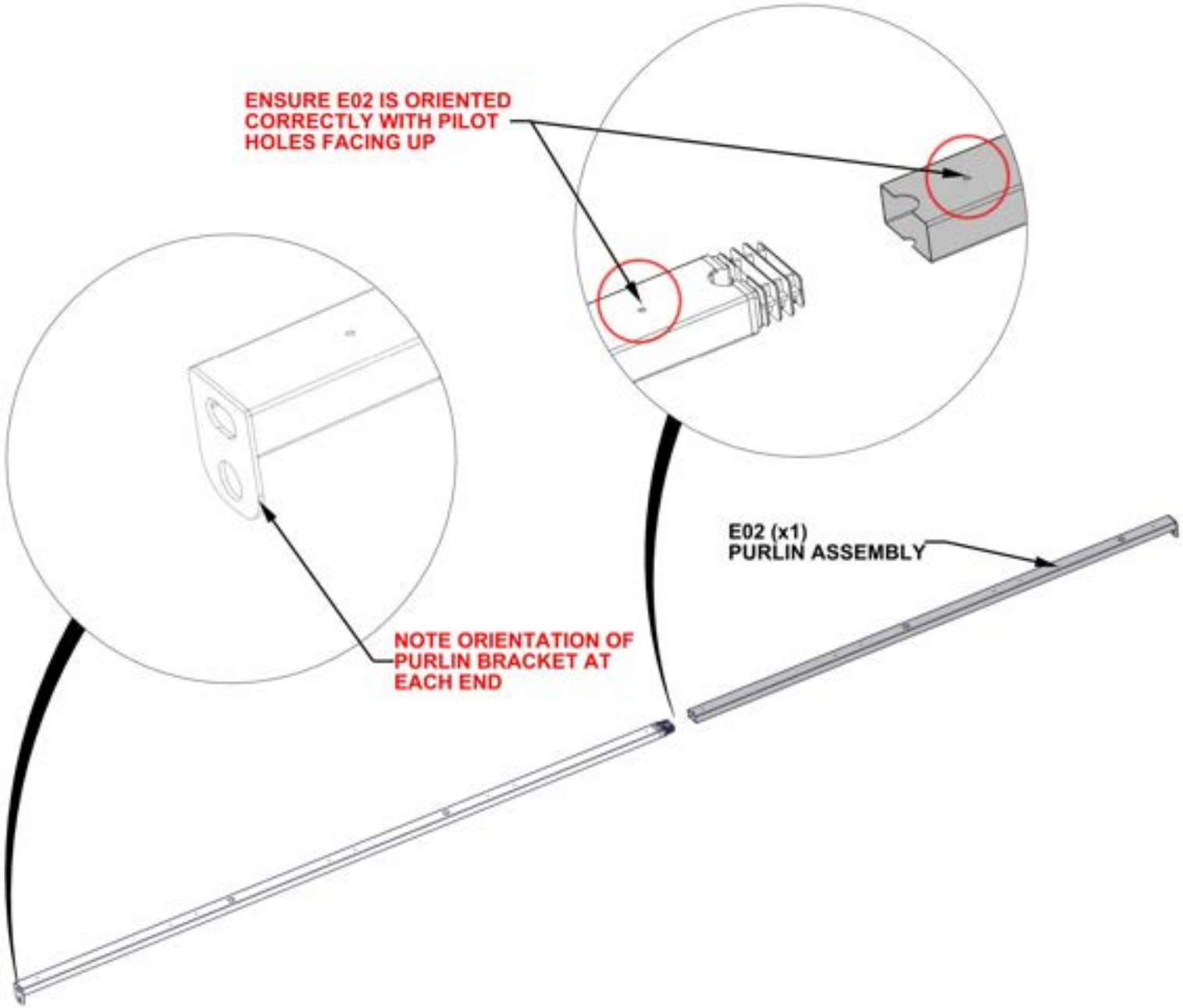

STEP 44A - ROOF ASSEMBLY

QTY	PartNo	DESCRIPTION
50	H101132	TORX SOCKET SCREW SHORT 1/4-20



PURLIN ASSEMBLIES
STEP 42 - 43 (x10)

- MAKE SURE MIDDLE OF PURLIN ASSEMBLY IS SUPPORTED WHEN LIFTING.
- ALIGN ALL PURLIN JOINTS ALONG THE THIRD RAFTER FROM THE BACK.
- STARTING AT THE RIDGE AND WORKING DOWN WILL MAKE IT EASIER TO INSTALL PURLIN ASSEMBLIES.

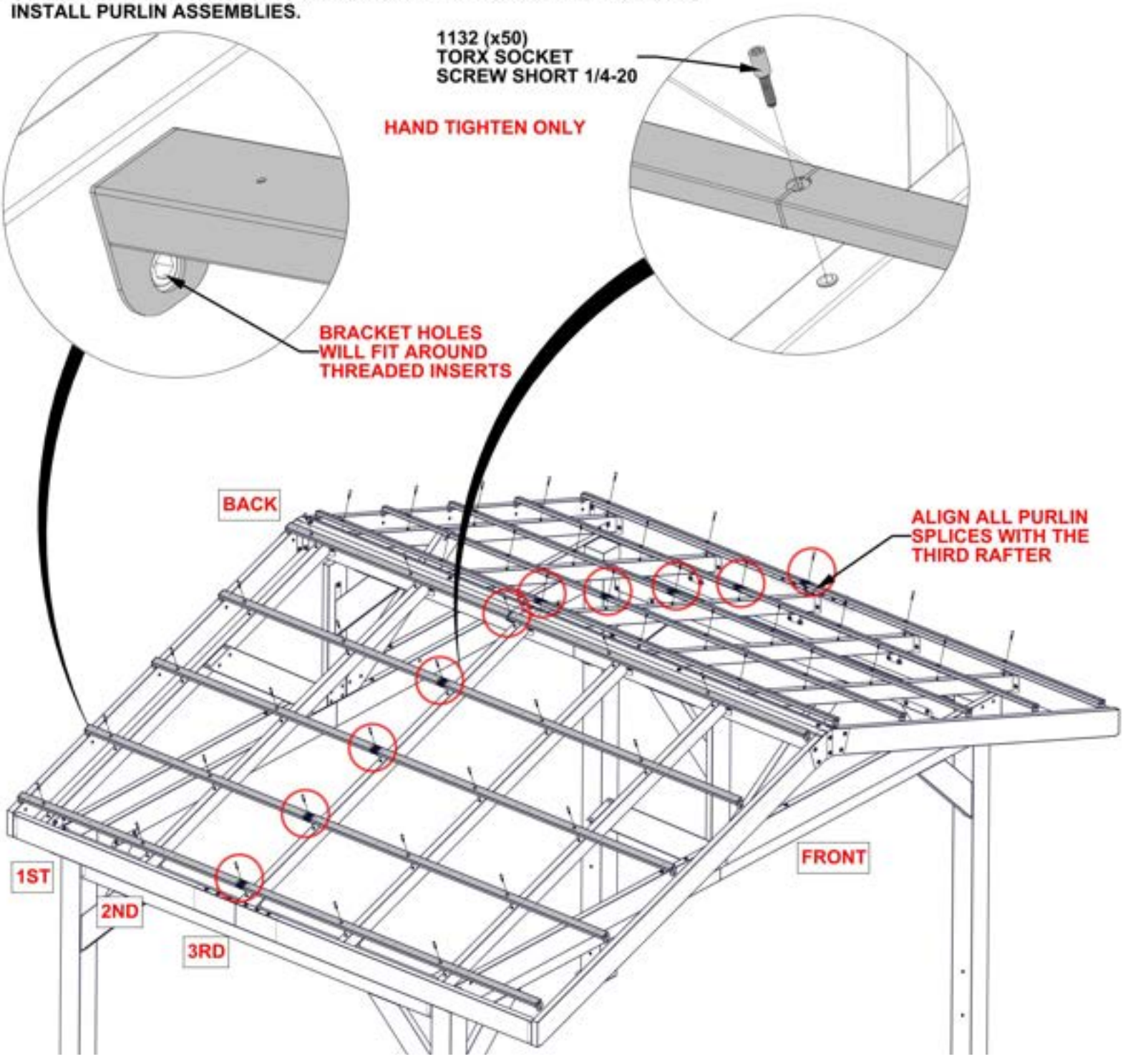

STEP 44B - ROOF ASSEMBLY

QTY	PartNo	DESCRIPTION
20	H101202	TORX PAN HEAD 1/4-20x3/4 ASSY

- ONCE PURLINS HAVE BEEN INSTALLED, TIGHTEN ALL HARDWARE FROM PREVIOUS STEPS.

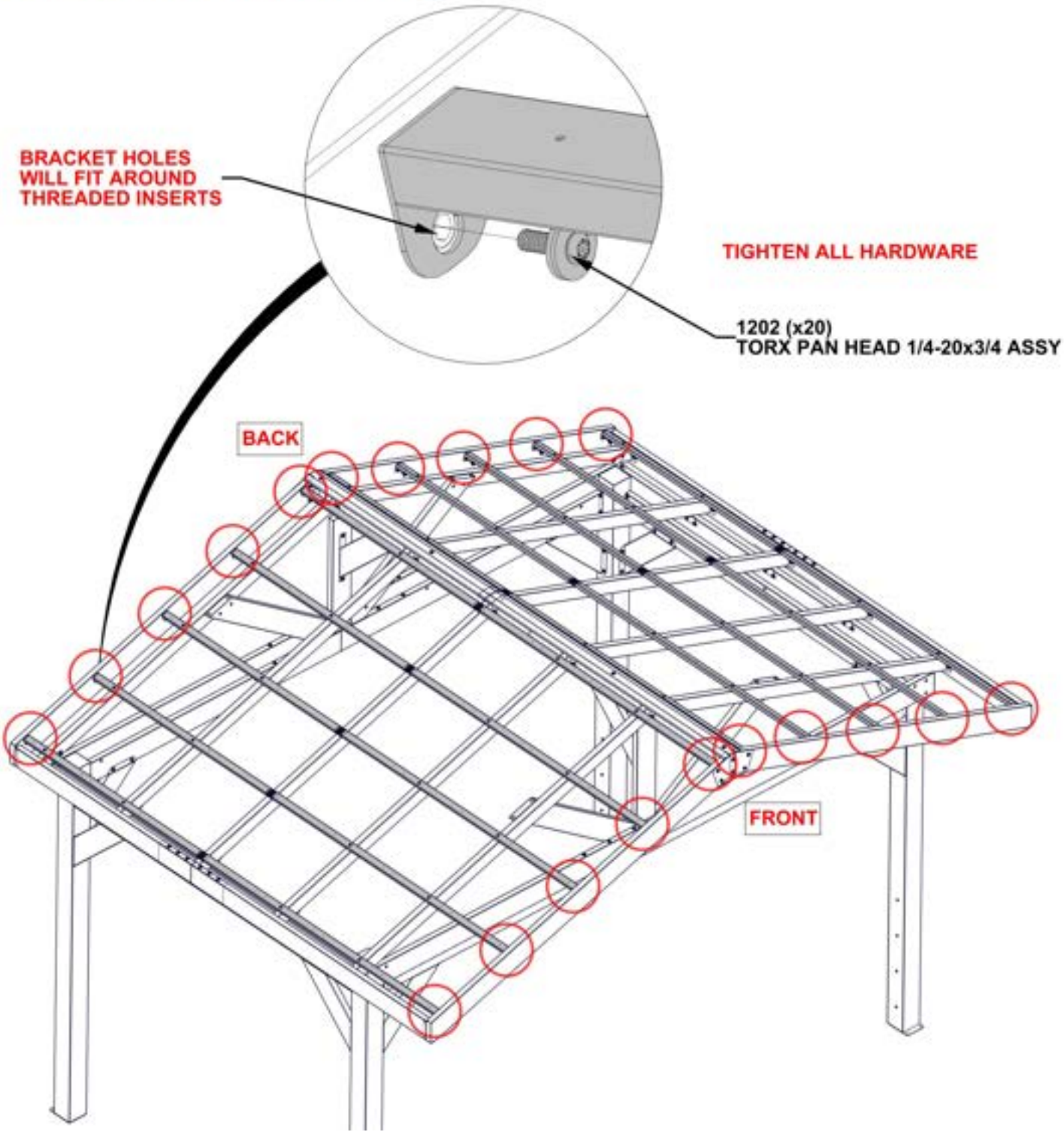

STEP 45 - ROOF ASSEMBLY

QTY	PartNo	DESCRIPTION
10	H101117	SCREW WOODGRIP 10-16x3/4" BLK



A4M03528 STEEL SHEETING
(x1)

- REMOVE PROTECTIVE FILM.
- SLIDE ROOF SHEET UP, MAKING SURE IT SLIDES UNDERNEATH THE RIDGE CAP.
- STARTING AT THE LEFT SIDE AND WORKING TO THE RIGHT, LINE UP THE HOLES IN THE ROOF SHEET WITH THE PILOT HOLES IN THE PURLINS.
- WARNING: GLOVES ARE RECOMMENDED WHEN HANDLING STEEL ROOF PIECES.
- LINE UP THE PILOT HOLES IN THE ROOF SHEET WITH THE PILOT HOLES IN THE PURLINS.

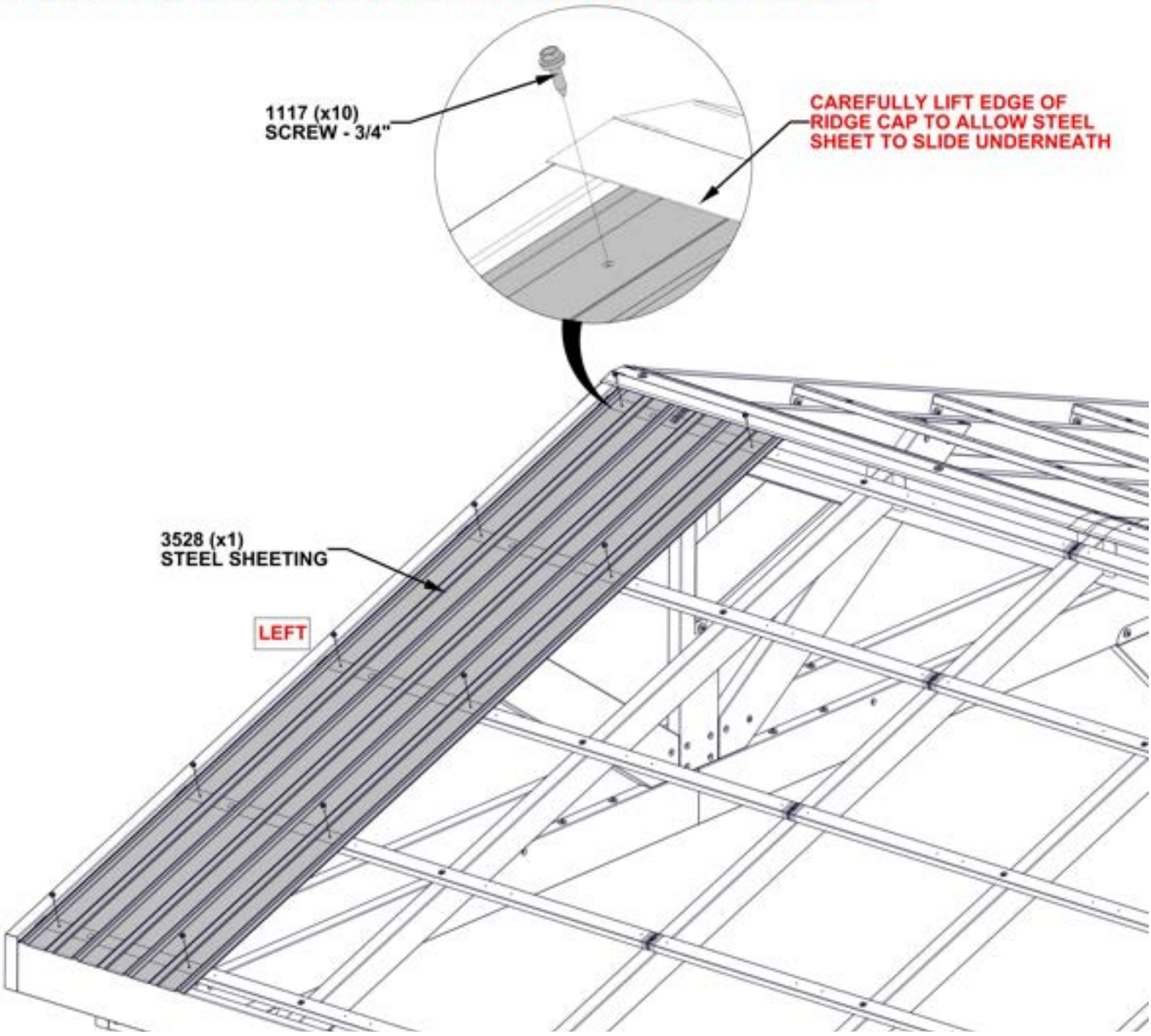

STEP 46 - ROOF ASSEMBLY

QTY	PartNo	DESCRIPTION
10	H101117	SCREW WOODGRIP 10-16x3/4" BLK



A4M03528 STEEL SHEETING
(x1)

- REMOVE PROTECTIVE FILM.
- SLIDE ROOF SHEET UP, MAKING SURE IT SLIDES UNDERNEATH THE RIDGE CAP.
- STARTING AT THE LEFT SIDE AND WORKING TO THE RIGHT, LINE UP THE HOLES IN THE ROOF SHEET WITH THE PILOT HOLES IN THE PURLINS.
- WARNING: GLOVES ARE RECOMMENDED WHEN HANDLING STEEL ROOF PIECES.
- LINE UP THE PILOT HOLES IN THE ROOF SHEET WITH THE PILOT HOLES IN THE PURLINS.

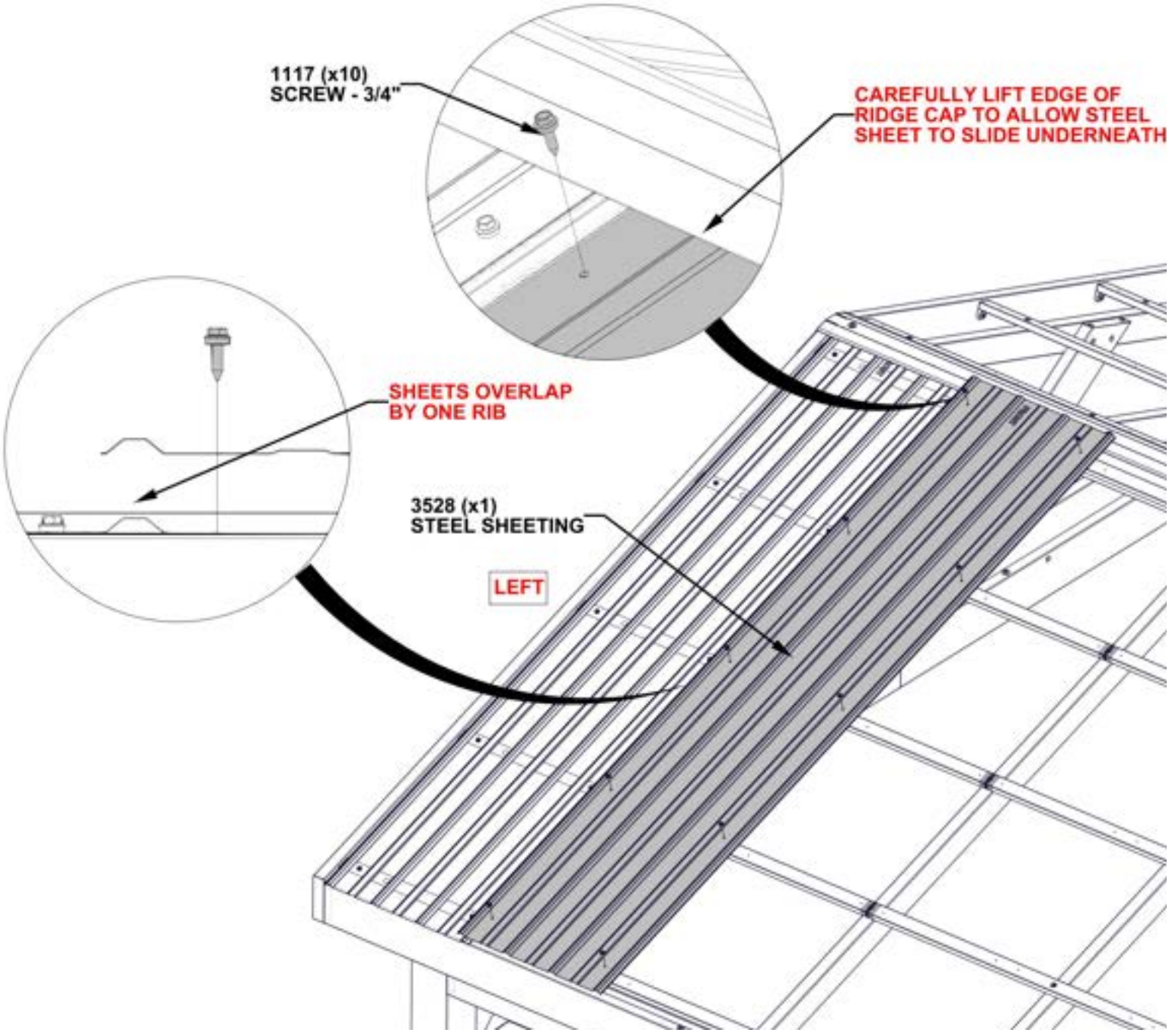

STEP 47 - ROOF ASSEMBLY

QTY	PartNo	DESCRIPTION
50	H101117	SCREW WOODGRIP 10-16x3/4" BLK



A4M03528 STEEL SHEETING
(x5)

- REMOVE PROTECTIVE FILM.
- INSTALL FIVE SHEETS IN THE SAME WAY AS THE FIRST TWO.
- ATTACH AND FULLY TIGHTEN ALL SCREWS ON EACH ROOF SHEET BEFORE ATTACHING THE NEXT ONE. THIS MAKES IT POSSIBLE TO REACH ALL THE SCREWS WITHOUT GETTING ON THE ROOF.
- WARNING: GLOVES ARE RECOMMENDED WHEN HANDLING STEEL ROOF PIECES.
- LINE UP THE PILOT HOLES IN THE ROOF SHEET WITH THE PILOT HOLES IN THE PURLINS.

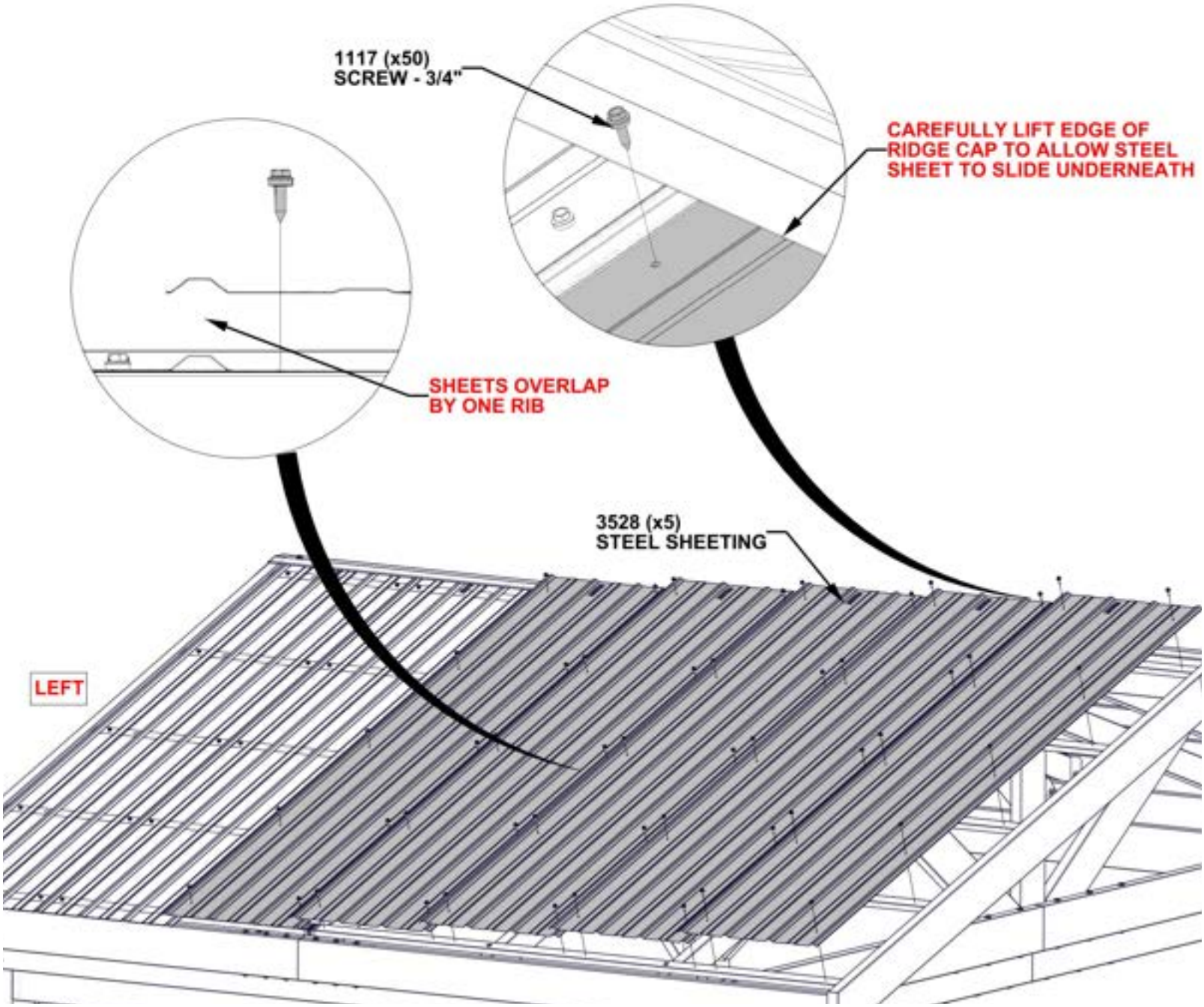

STEP 48 - ROOF ASSEMBLY

QTY	PartNo	DESCRIPTION
8	H101116	SCREW SELF TAPPING 1/4x1 BLK

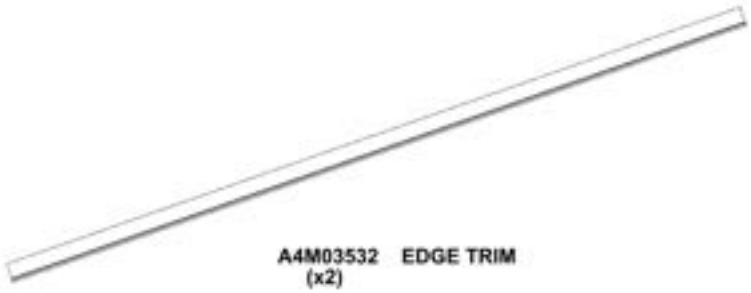

A4M03532 EDGE TRIM
(x2)

- REMOVE PROTECTIVE FILM.
- SLIDE EDGE TRIM UNTIL ONE END IS POSITIONED UNDERNEATH RIDGE CAP AND OTHER END IS FLUSH WITH END.
- STARTING AT THE TOP. ALIGN SCREWS WITH SHEET SCREWS.
- DUE TO MULTIPLE LAYERS OF METAL ON THE DRIP EDGE, IT IS RECOMMENDED THAT A 1/8" (3mm) DRILL BIT BE USED TO CREATE STARTER HOLES.
- WARNING: GLOVES ARE RECOMMENDED WHEN HANDLING STEEL ROOF PIECES.

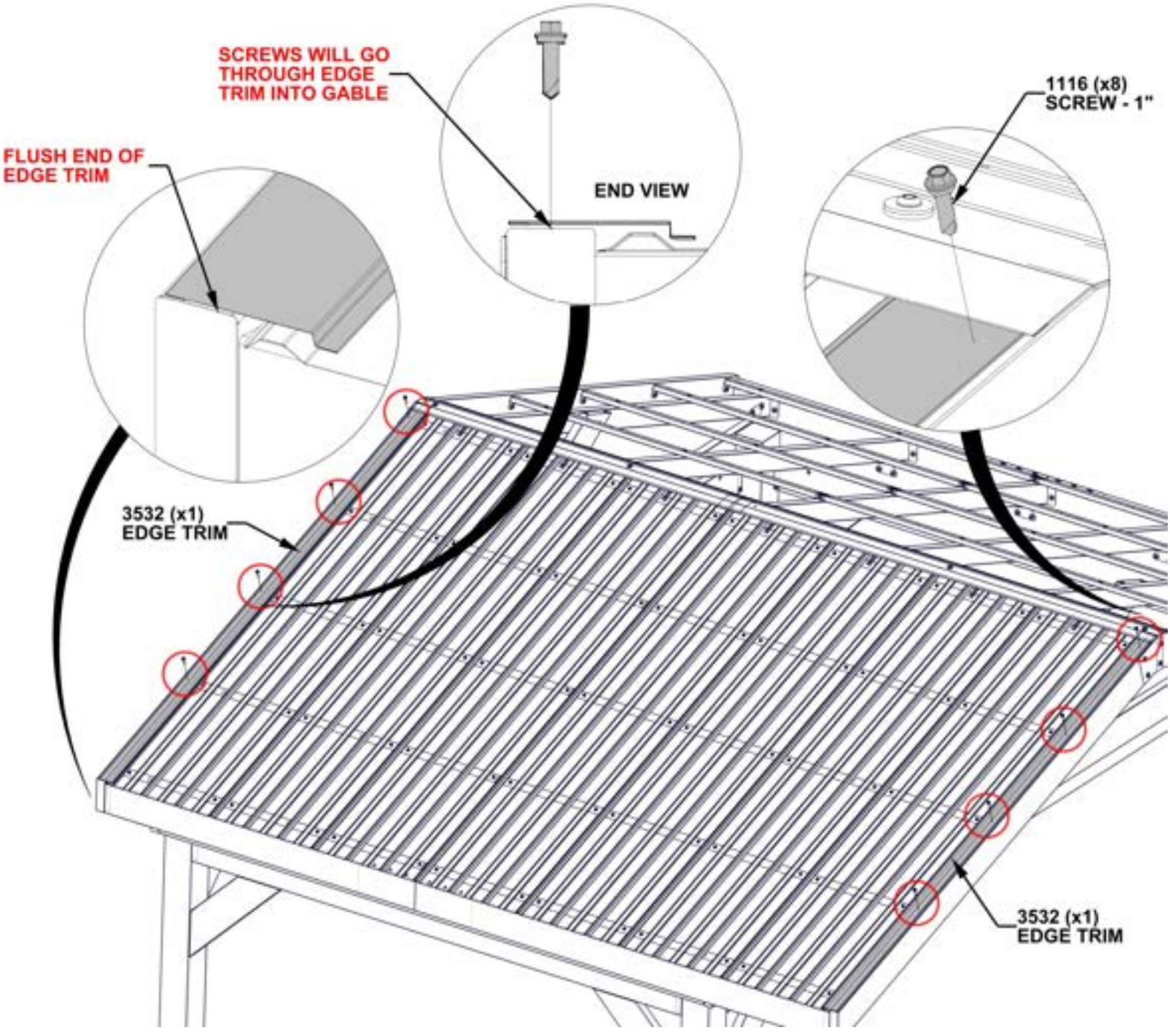

STEP 49A - ROOF ASSEMBLY



A4M03529 DRIP TRIM
(x1)



A4M03530 DRIP TRIM
(x1)



A4M03531 DRIP TRIM SPLICE
(x1)

- REMOVE PROTECTIVE FILM.
- ORIENT DRIP EDGE AND SPLICE AS SHOWN BELOW.
- STARTING IN THE FRONT CORNER, ATTACH SCREWS SPACING EVERY OTHER RIB.
- DUE TO MULTIPLE LAYERS OF METAL ON THE DRIP EDGE, IT IS RECOMMENDED THAT A 1/8" (3mm) DRILL BIT BE USED TO CREATE STARTER HOLES.
- WARNING: GLOVES ARE RECOMMENDED WHEN HANDLING STEEL ROOF PIECES.

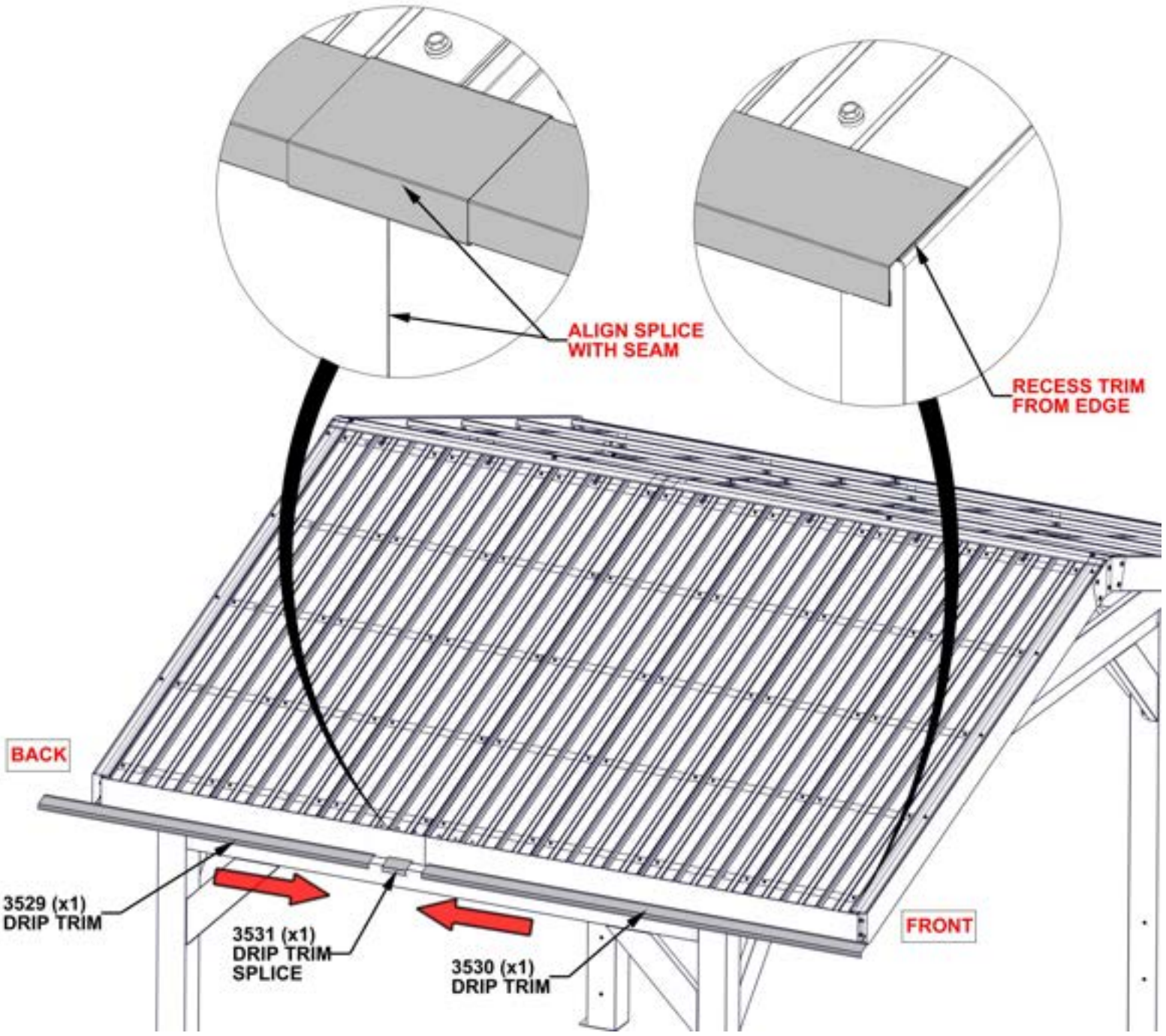

STEP 49B - ROOF ASSEMBLY

QTY	PartNo	DESCRIPTION
12	H101116	SCREW SELF TAPPING 1/4x1 BLK



A4M03529 DRIP TRIM
(x1)



A4M03530 DRIP TRIM
(x1)



A4M03531 DRIP TRIM SPLICE
(x1)

- REMOVE PROTECTIVE FILM.
- ORIENT DRIP EDGE AND SPLICE AS SHOWN BELOW.
- STARTING IN THE FRONT CORNER, ATTACH SCREWS SPACING EVERY OTHER RIB.
- DUE TO MULTIPLE LAYERS OF METAL ON THE DRIP EDGE, IT IS RECOMMENDED THAT A 1/8" (3mm) DRILL BIT BE USED TO CREATE STARTER HOLES.
- WARNING: GLOVES ARE RECOMMENDED WHEN HANDLING STEEL ROOF PIECES.

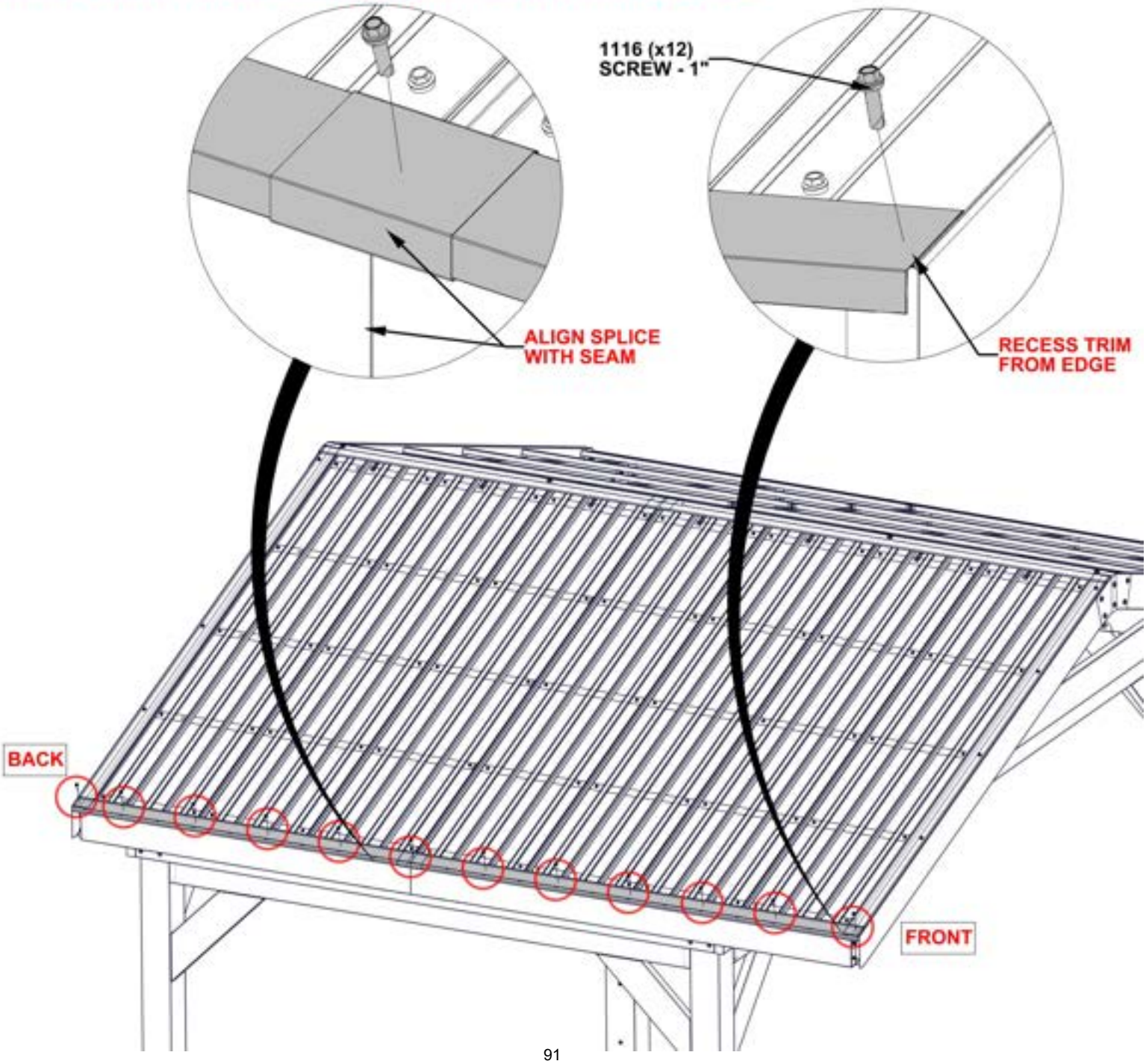

REPEAT ROOF ASSEMBLY STEPS 45 - 49
TO INSTALL SHEETMETAL ON OPPOSITE SIDE OF ROOF

STEP 50 - STRUCTURE ASSEMBLY



A4M01352 HOLE COVER
(x70)

- USE A SMALL PIECE OF WOOD AND RUBBER MALLET TO TAP HOLE COVERS IN.
- DO NOT TAP DIRECTLY WITH A HAMMER AS YOU MAY DAMAGE THE POWDER COAT FINISH ON PRODUCT.

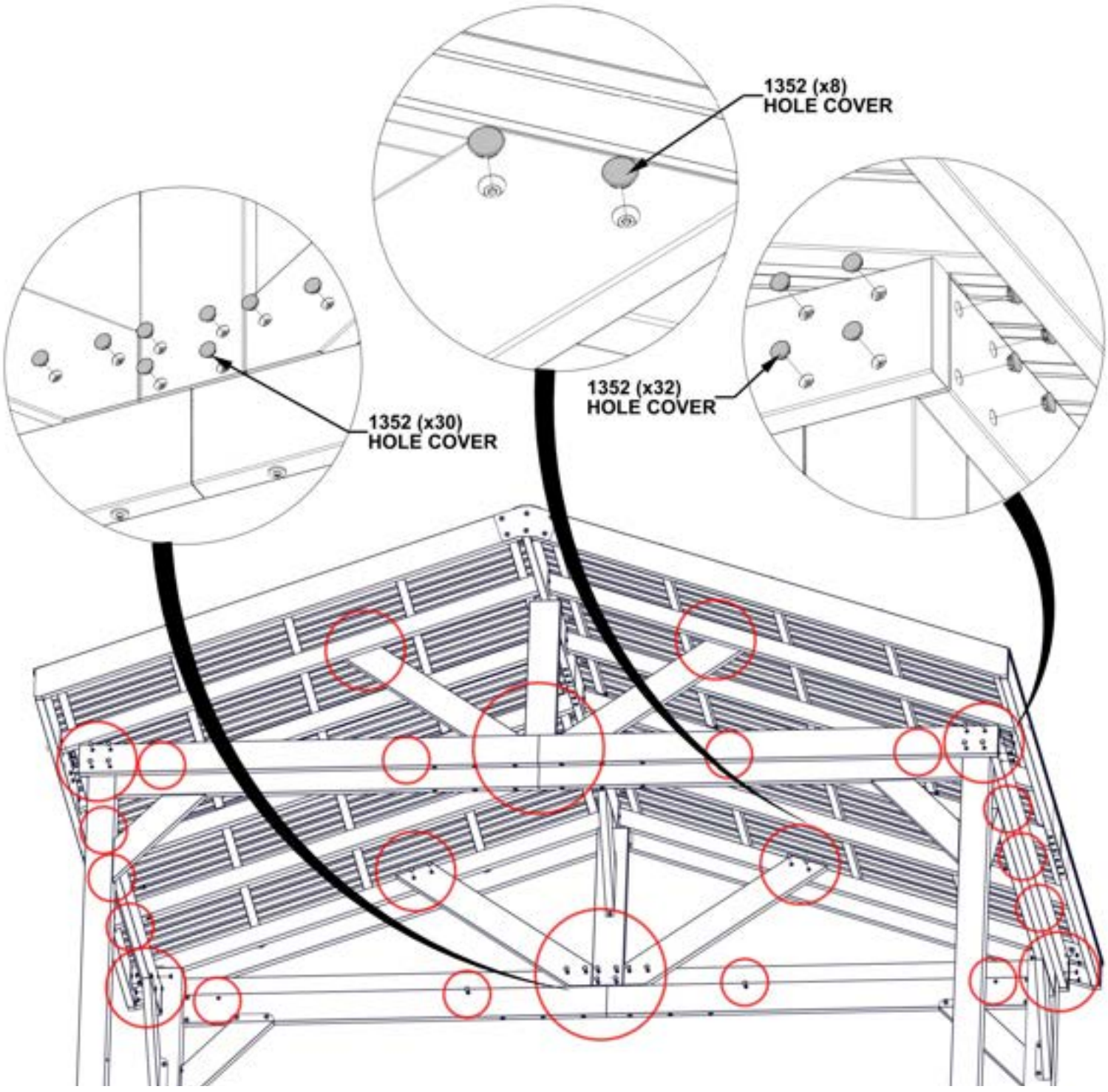

COMPLETE STEPS 51 - 138 FOR LANCASTER GALLEY OUTDOOR KITCHEN CABINETS

STEP 51 - FRIDGE CABINET ASSEMBLY

Qty	PartNo	Description
2	H101202	TORX PAN HEAD 1/4-20x3/4 ASSY



F4 FRIDGE CABINET FLOOR PANEL ASSEMBLY - A4M03595
(x1) 28 1/8"x23 3/8"x2 5/8" (66x594x715)



S8 FRIDGE CABINET SIDE PANEL ASSEMBLY R - A4M03598
(x1) 33 3/8"x23 3/8"x1 15/16" (50x594x848.20)

- POSITION FLOOR PANEL IN THE PROXIMITY OF WHERE YOUR KITCHEN WILL BE.
- EACH FLOOR PANEL HAS FACTORY INSTALLED ADJUSTABLE FEET. USE PROVIDED HEX DRIVER TO ADJUST EACH FOOT UNTIL PANEL IS LEVEL.

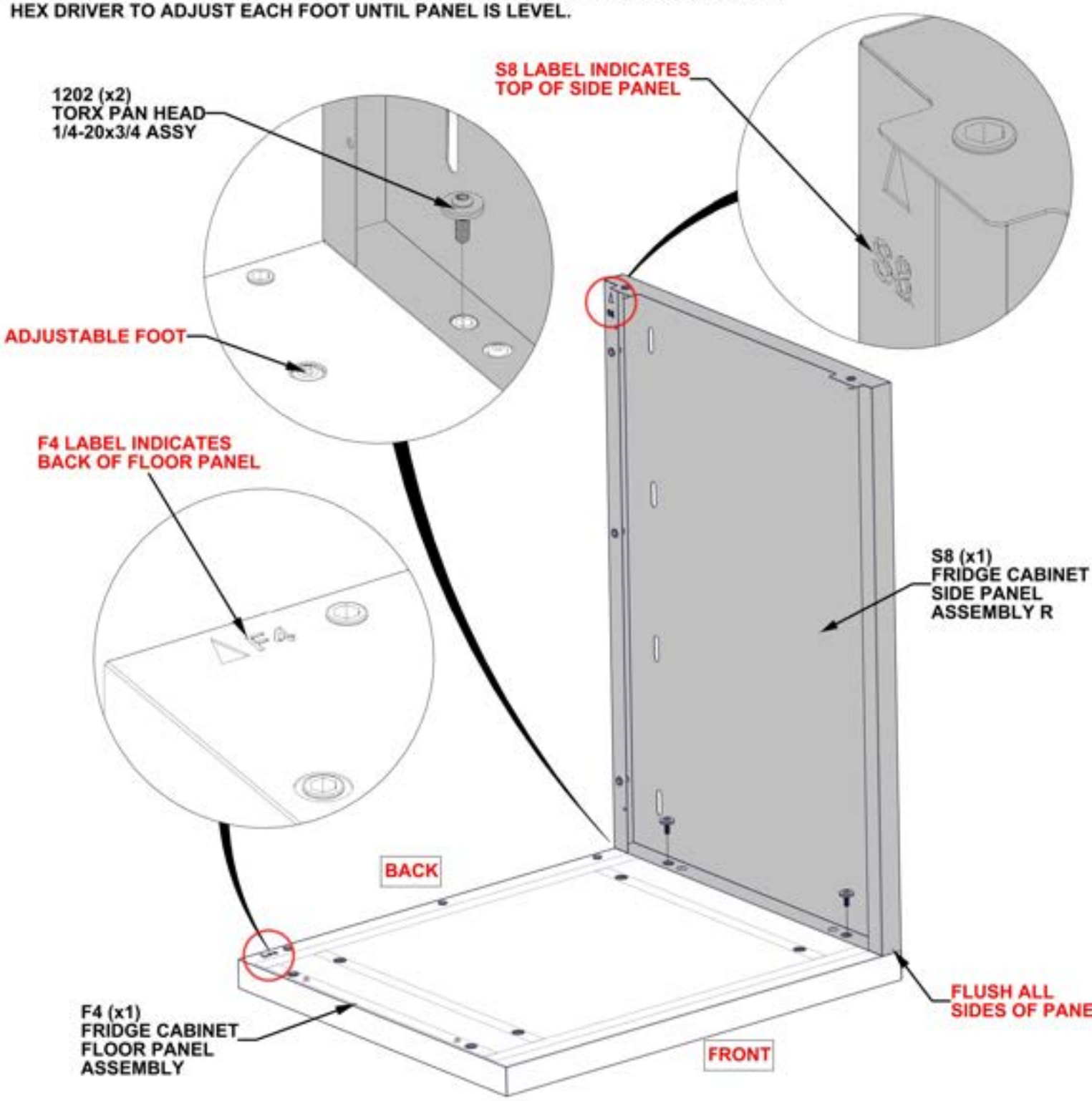

STEP 52 - FRIDGE CABINET ASSEMBLY

Qty	PartNo	Description
2	H101202	TORX PAN HEAD 1/4-20x3/4 ASSY



S7 FRIDGE CABINET SIDE PANEL ASSEMBLY L - A4M03597
(x1) 33 7/16"x23 3/8"x2 1/16" (53x594x849.7)

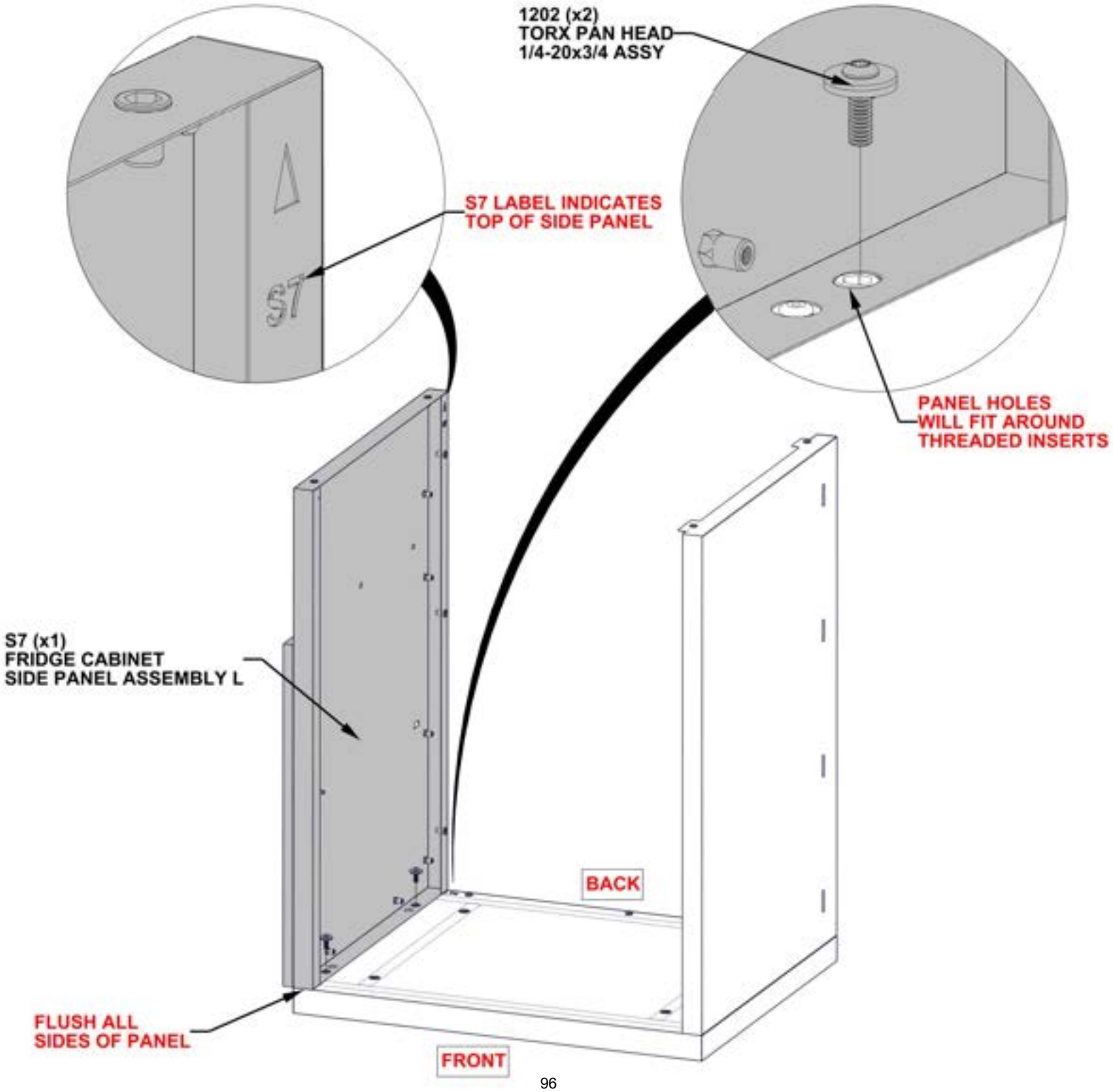

STEP 53 - FRIDGE CABINET ASSEMBLY

Qty	PartNo	Description
9	H101202	TORX PAN HEAD 1/4-20x3/4 ASSY



G4 FRIDGE CABINET BACK PANEL ASSEMBLY - A4M03599
(x1) 25 5/16"x33 3/8"x1 3/16" (30x847.2x643)

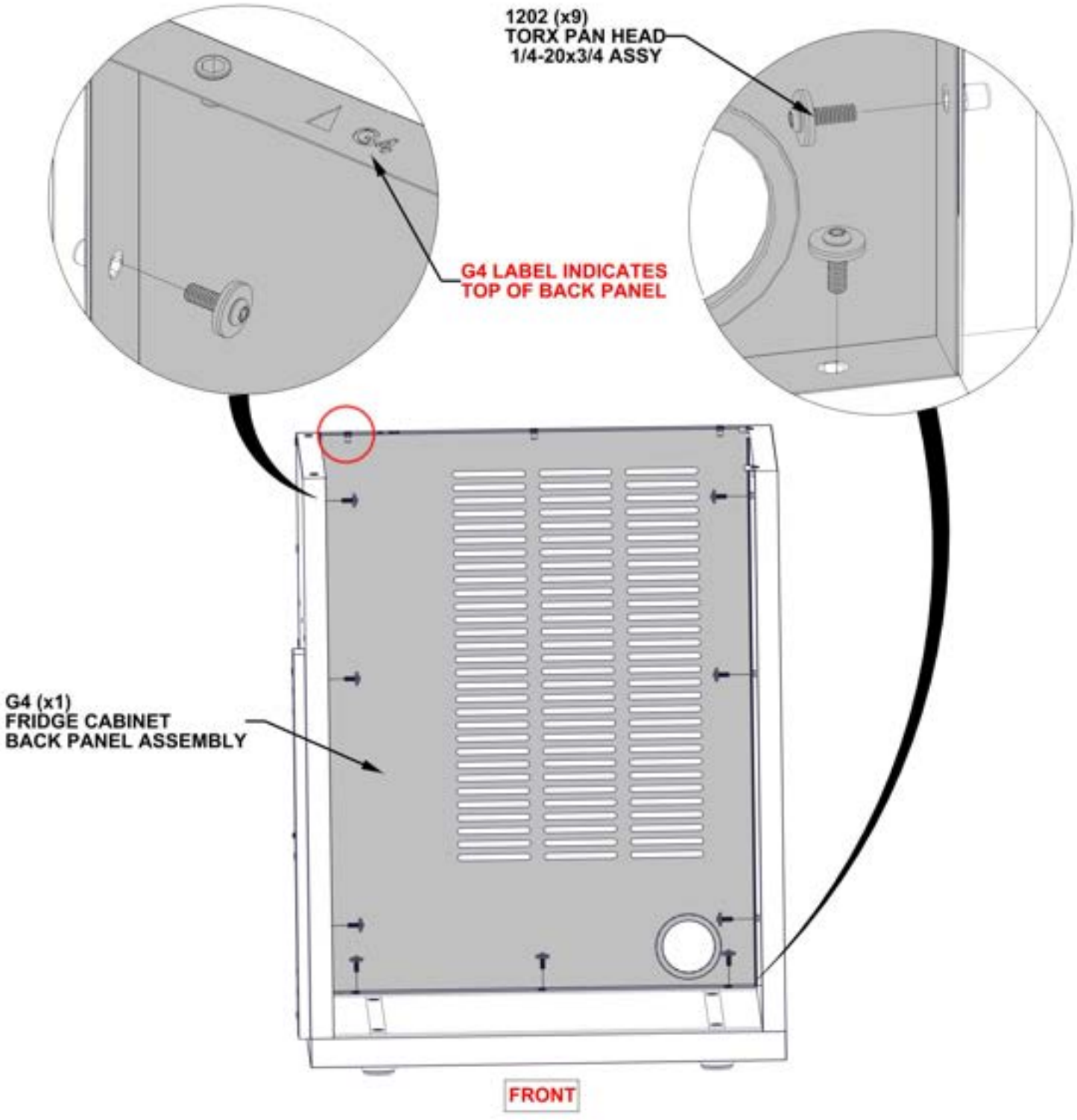

STEP 54 - FRIDGE CABINET ASSEMBLY

Qty	PartNo	Description
7	H101103	TORX SOCKET SCREW 1/4-20

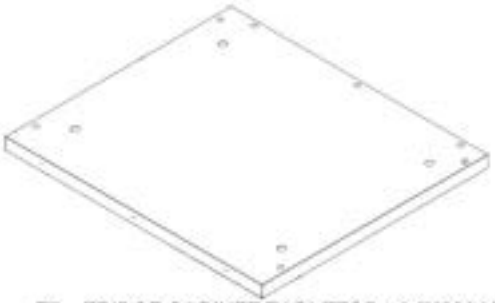

T7 FRIDGE CABINET TABLETOP - A4M03641
(x1) 27 3/8"x24 1/8"x1 1/4" (32x612x696)

- FLUSH BACK AND SIDES OF PANEL ASSEMBLY.
- SQUARE ALL SIDES OF CABINET BEFORE TIGHTENING HARDWARE.

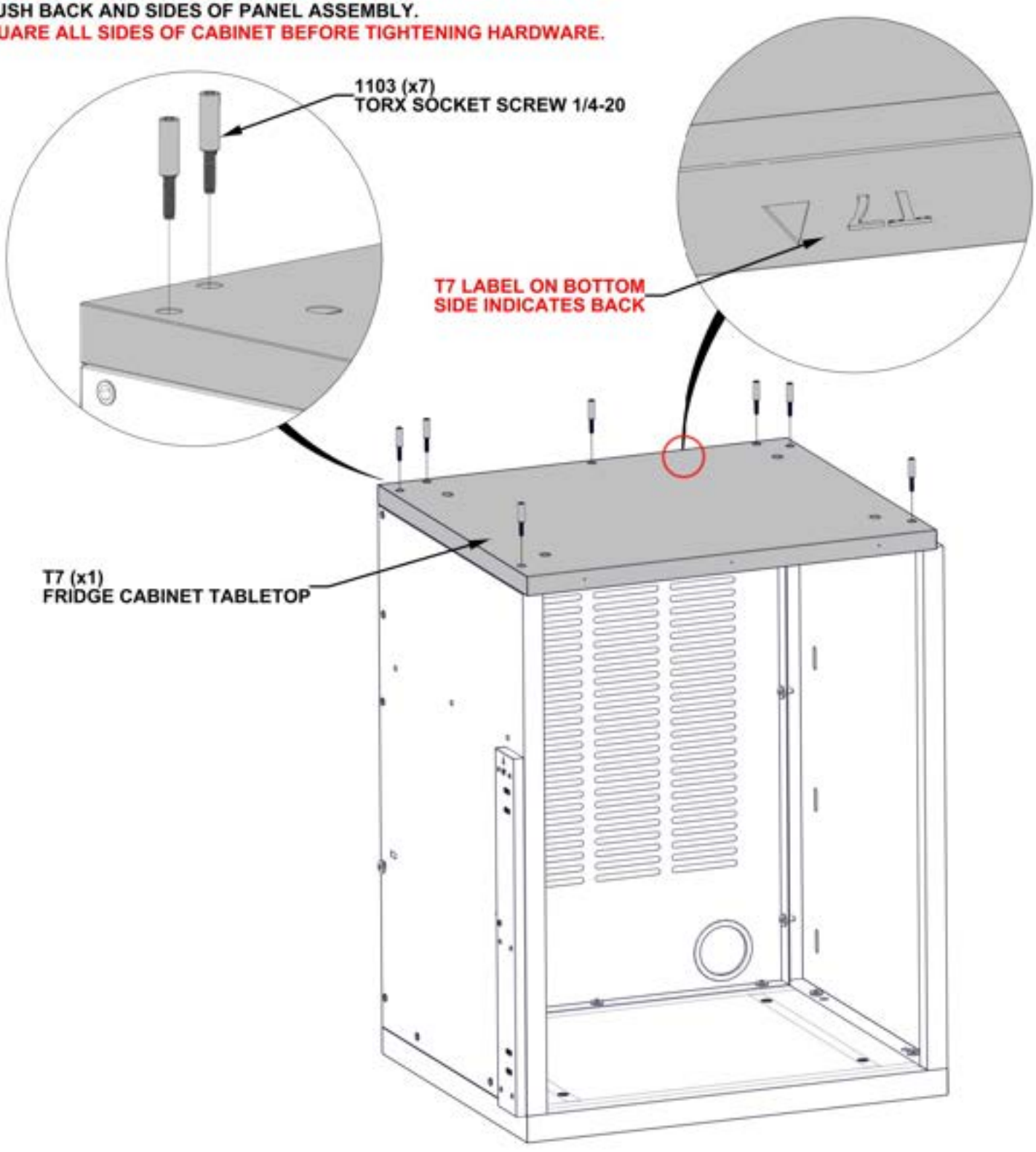

STEP 55 - FRIDGE CABINET INSTALLATION

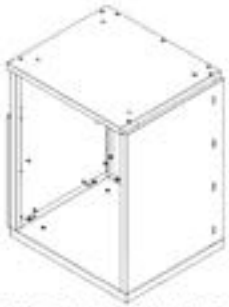

FRIDGE CABINET FROM
STEPS 51 - 54

Qty	PartNo	Description
4	H101202	TORX PAN HEAD 1/4-20x3/4 ASSY

- POSITION FRIDGE CABINET ASSEMBLY UNDERNEATH LANCASTER GALLEY STRUCTURE.
- SIDE OF FRIDGE CABINET WILL SIT AGAINST THE INSIDE OF THE BACK RIGHT POST.
- BACKSIDE OF FRIDGE CABINET WILL SIT FLUSH WITH BACKSIDE OF POST.
- BEFORE TIGHTENING HARDWARE, ADJUST CABINET FEET AS NEEDED UNTIL FRIDGE CABINET IS LEVEL.

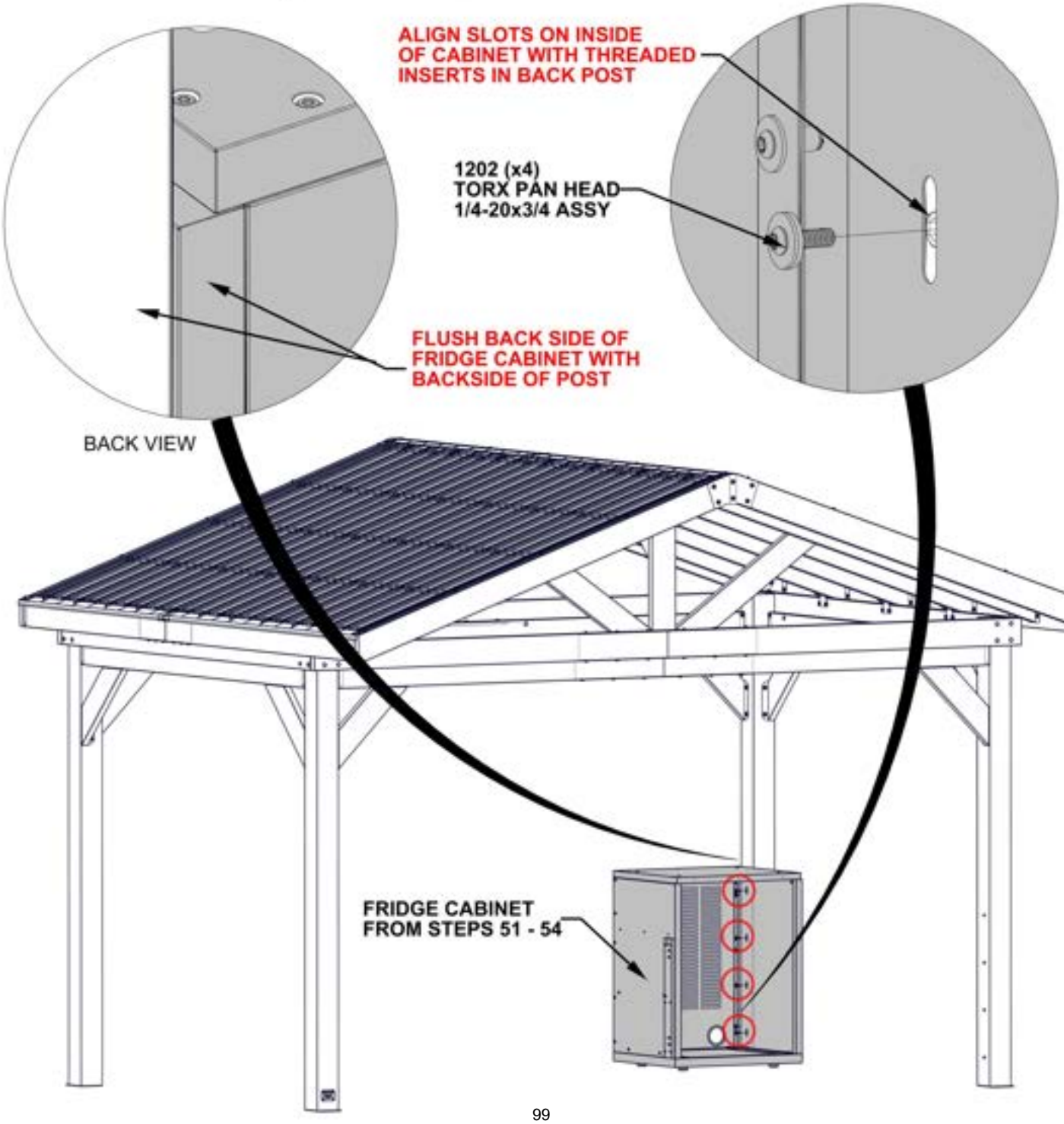

STEP 56 - SINK CABINET ASSEMBLY

Qty	PartNo	Description
2	H101202	TORX PAN HEAD 1/4-20x3/4 ASSY

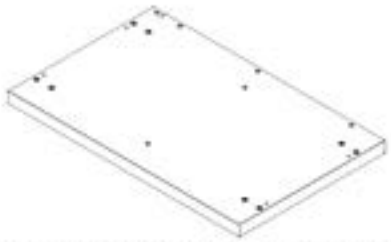

F3 SINK CABINET FLOOR PANEL ASSEMBLY - A4M03560
(x1) 37 3/16"x23 3/8"x2 5/8" (66x594x944)



S3 SINK CABINET SIDE PANEL ASSEMBLY L - A4M03562
(x1) 33 3/8"x23 3/8"x1 3/8" (35.00x594.00x848.20)

- POSITION FLOOR PANEL IN THE PROXIMITY OF WHERE YOUR KITCHEN WILL BE.
- EACH FLOOR PANEL HAS FACTORY INSTALLED ADJUSTABLE FEET. USE PROVIDED HEX DRIVER TO ADJUST EACH FOOT UNTIL PANEL IS LEVEL.

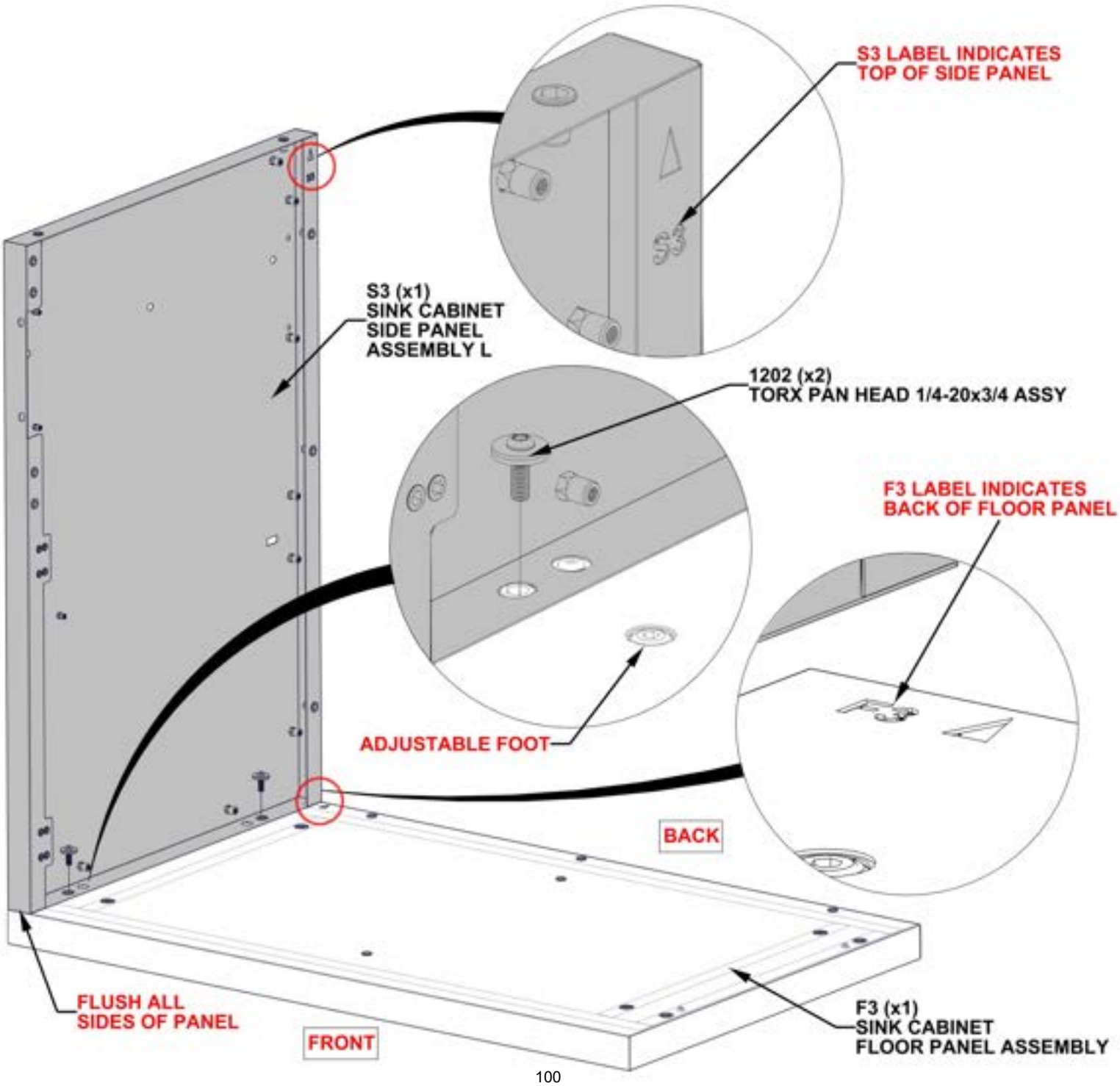

STEP 57 - SINK CABINET ASSEMBLY

Qty	PartNo	Description
2	H101202	TORX PAN HEAD 1/4-20x3/4 ASSY



S4 SINK CABINET SIDE PANEL ASSEMBLY R - A4M03563
(x1) 33 3/8"x23 3/8"x2 5/8" (67x594x848.20)

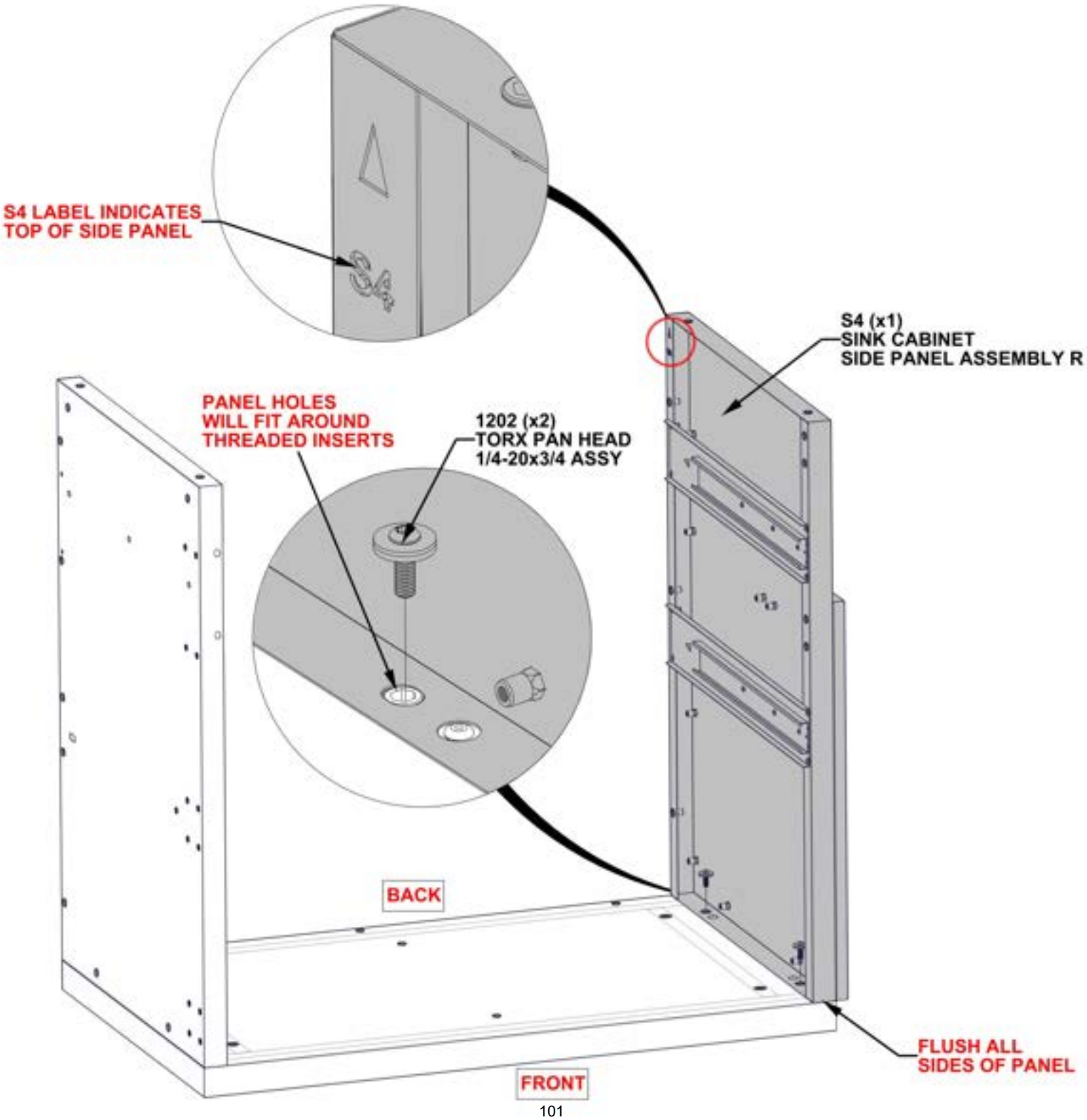

STEP 58 - SINK CABINET ASSEMBLY

Qty	PartNo	Description
9	H101202	TORX PAN HEAD 1/4-20x3/4 ASSY



G3 SINK CABINET BACK PANEL ASSEMBLY - A4M03564
(x1) 34 5/16"x33 3/8"x1 3/16" (30x847.2x872)

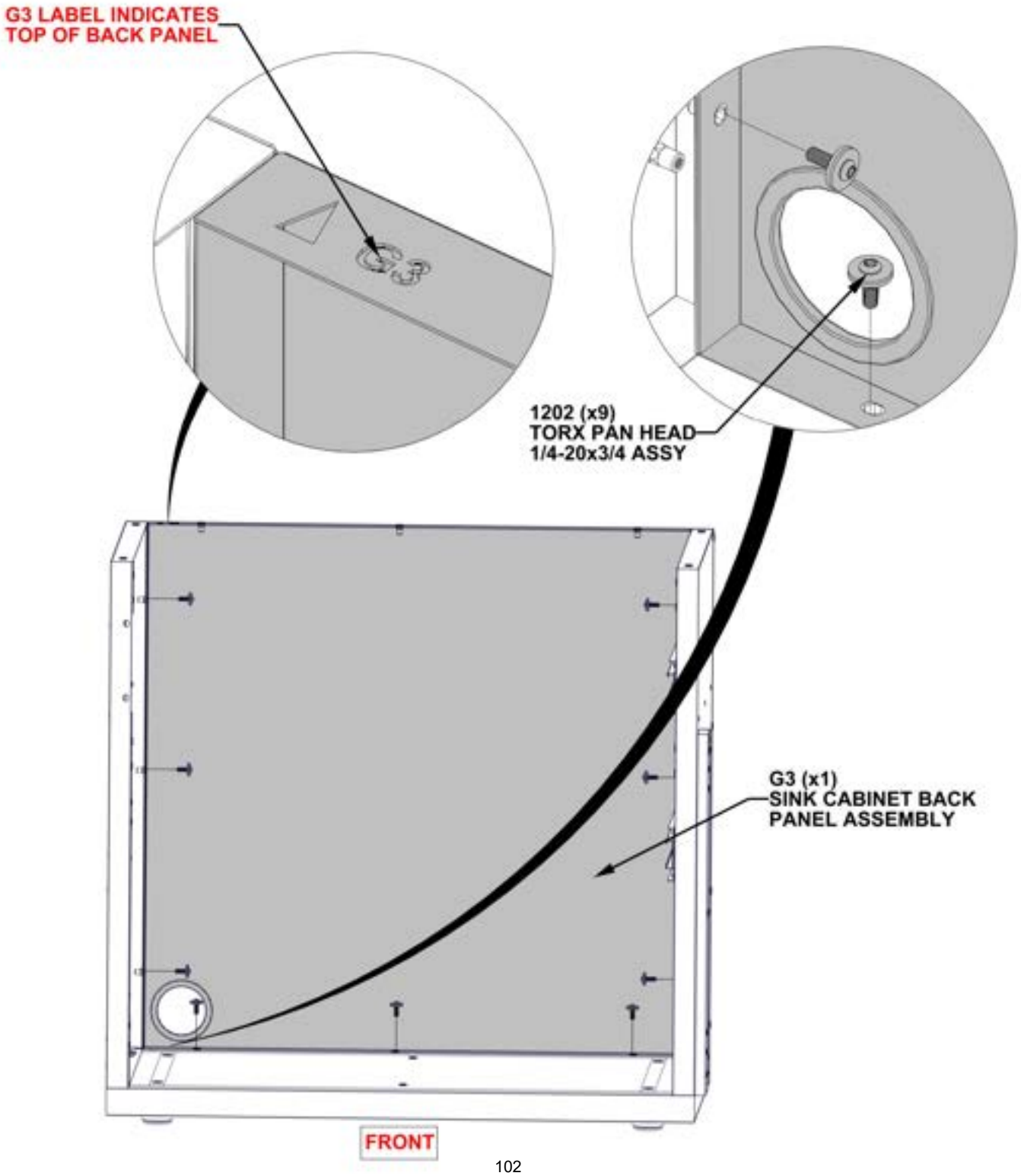

STEP 59 - SINK CABINET ASSEMBLY

Qty	PartNo	Description
2	H101202	TORX PAN HEAD 1/4-20x3/4 ASSY



S5 SINK CABINET SIDE PANEL ASSEMBLY M - A4M03567
(x1) 33 3/8"x23 3/8"x2 3/16" (56.2x593x847)

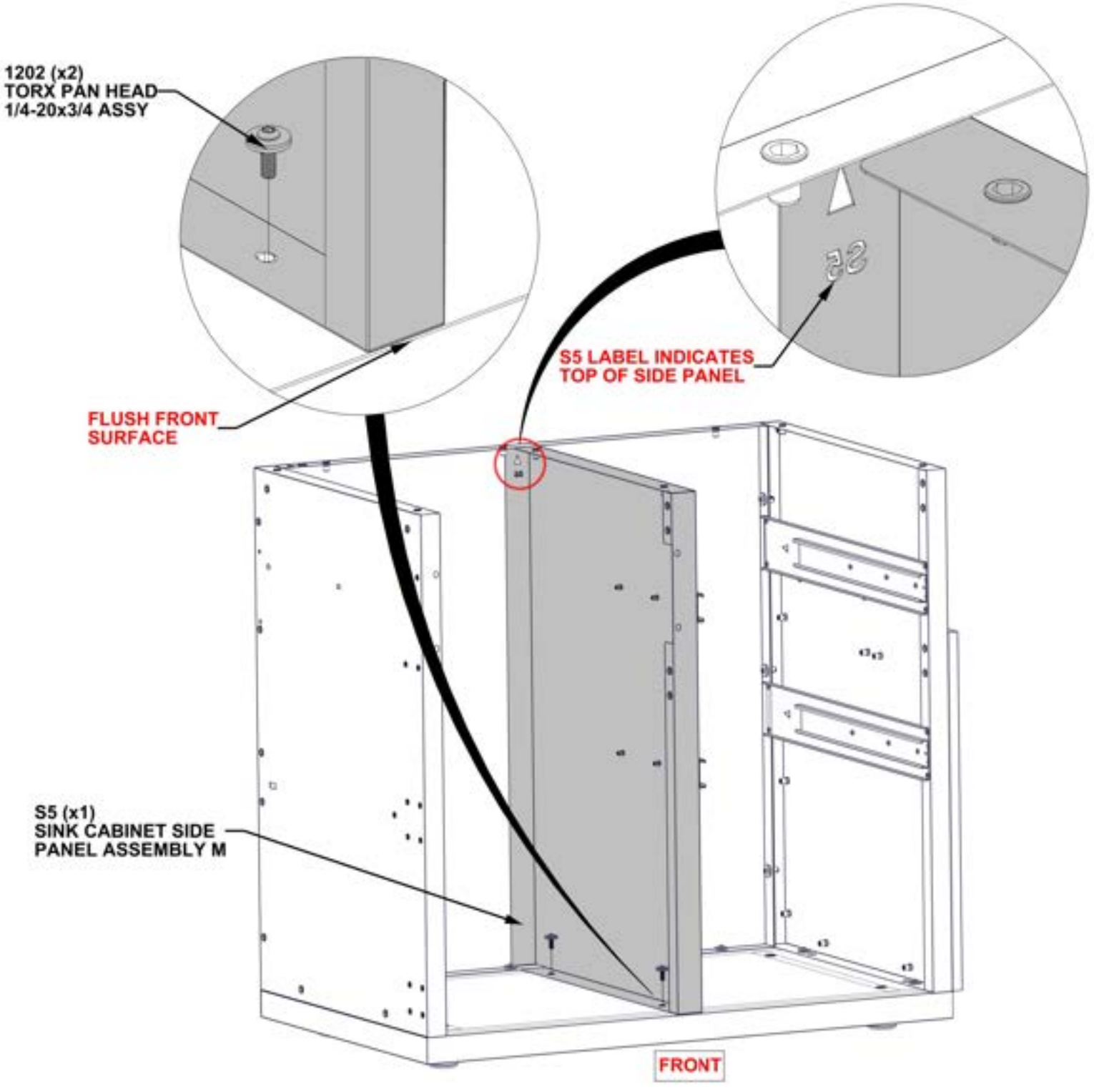

STEP 60 - SINK CABINET ASSEMBLY

Qty	PartNo	Description
16	H101202	TORX PAN HEAD 1/4-20x3/4 ASSY



H4 HORIZONTAL BEAM ASSEMBLY L - A4M03575
(x4) 16 1/4"x3 3/8"x1" (25x85x413)

- HARDWARE ATTACHES ON INSIDE OF CABINET

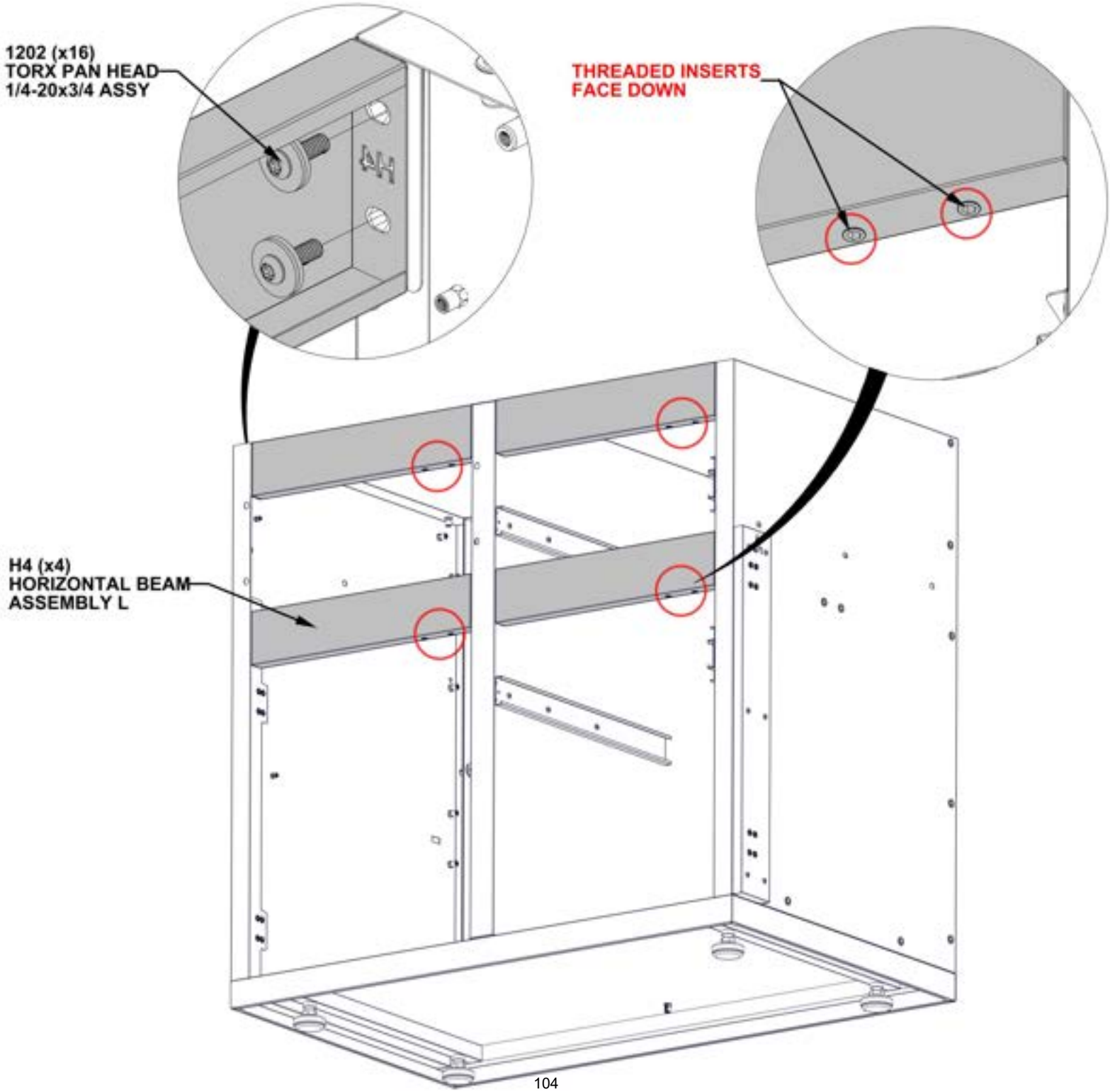

STEP 61 - SINK CABINET ASSEMBLY

Qty	PartNo	Description
2	H101289	PAN HEAD SCREW 8-32x1/2" SS



A2 MAGNET BRACKET - A4M03026
(x1) 1"x1 1/4"x3 1/8" (25x31x80)

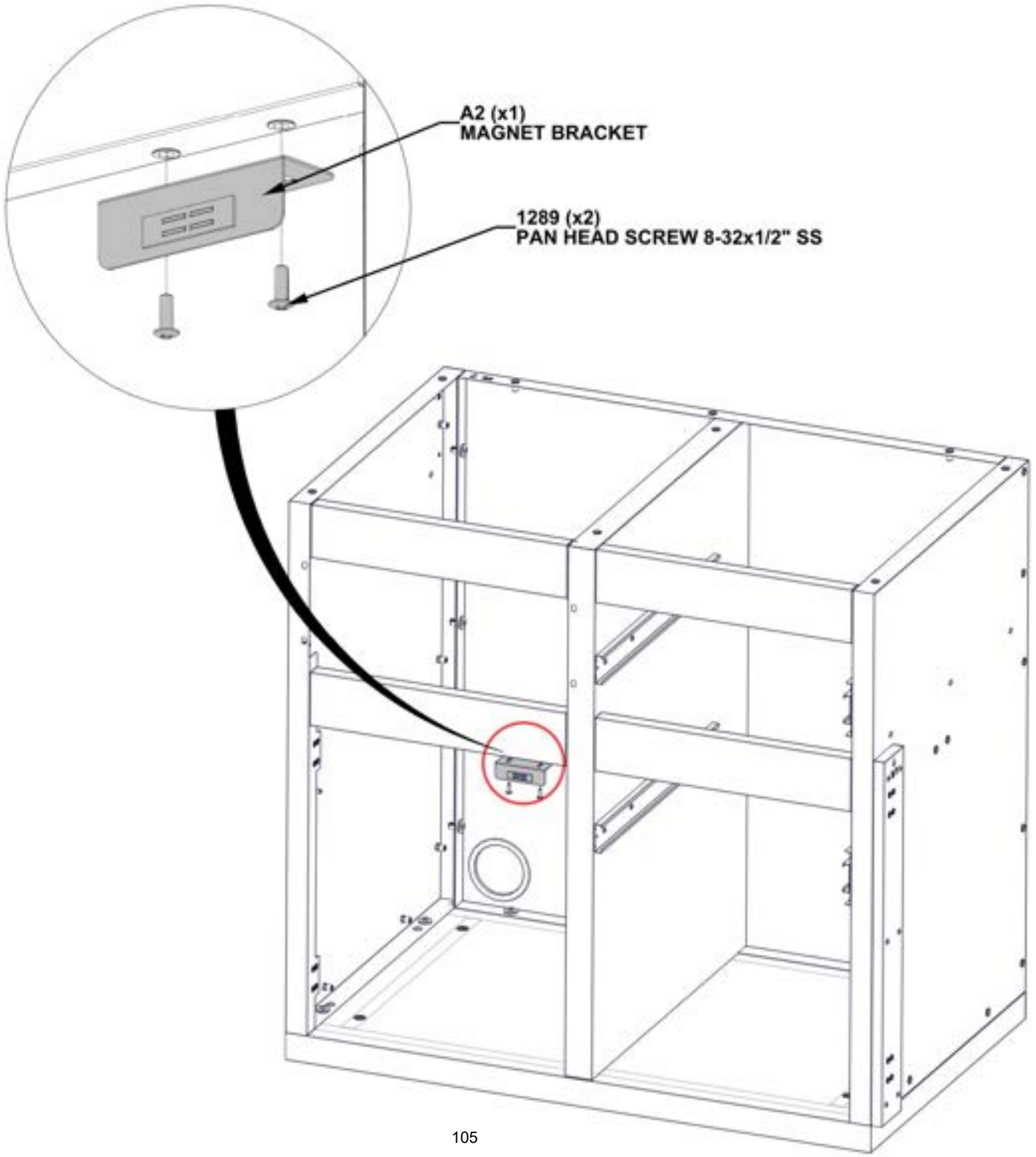

STEP 62 - SINK CABINET ASSEMBLY

Qty	PartNo	Description
6	H101287	PAN HEAD SCREW 8-32x1" SS



H5 PIZZA OVEN CABINET HINGE CHANNEL ASSEMBLY - A4M03558
(x1) 26 5/8"x2 15/16"x11/16" (18x74.80x676)

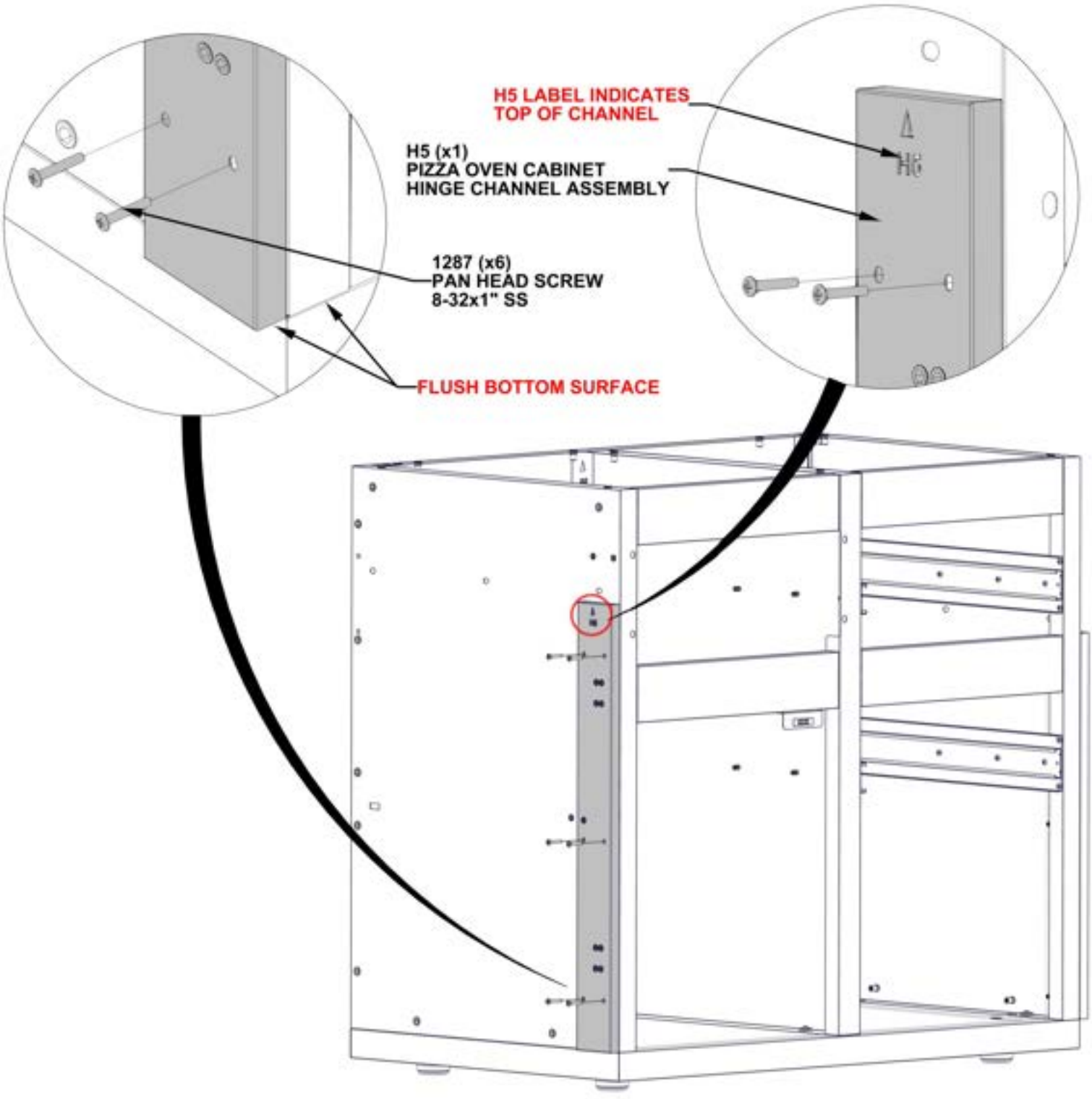

STEP 63 - SINK CABINET ASSEMBLY

Qty	PartNo	Description
9	H101103	TORX SOCKET SCREW 1/4-20

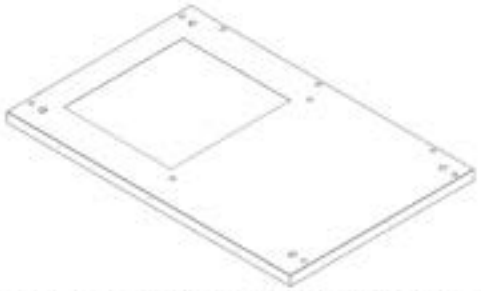

T4 SINK CABINET TABLETOP FRAME - A4M03566
(x1) 37 3/16"x24 1/8"x1 1/4" (32x612x944)

- FLUSH BACK AND SIDE OF PANEL ASSEMBLY.
- SQUARE ALL SIDES OF CABINET BEFORE TIGHTENING HARDWARE.

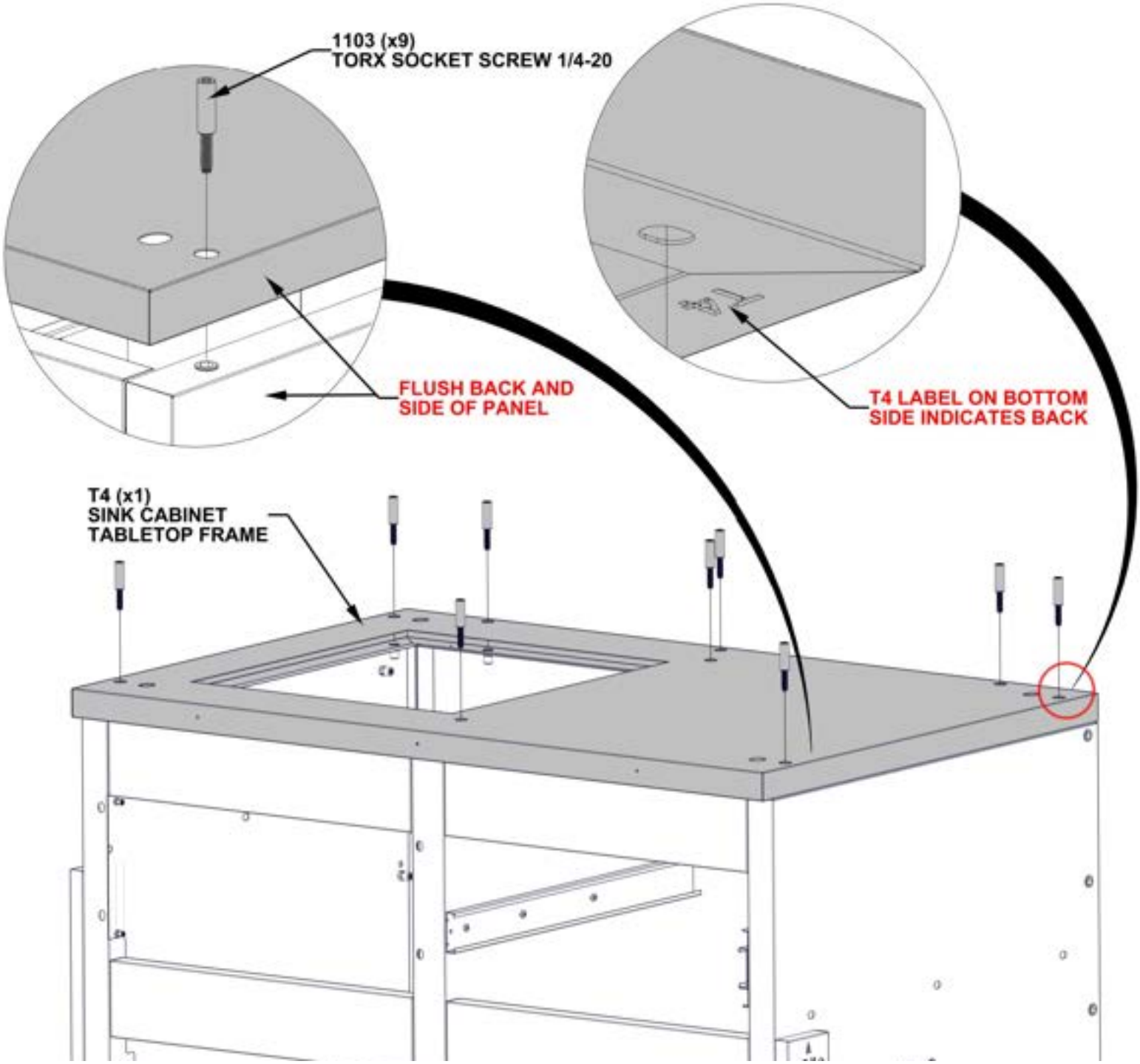

STEP 64 - SINK CABINET INSTALLATION



SINK CABINET FROM
STEPS 56 - 63

- POSITION SINK CABINET ASSEMBLY UNDERNEATH LANCASTER GALLEY STRUCTURE.
- DISTANCE BETWEEN FRIDGE CABINET WILL BE DETERMINED IN NEXT STEP.

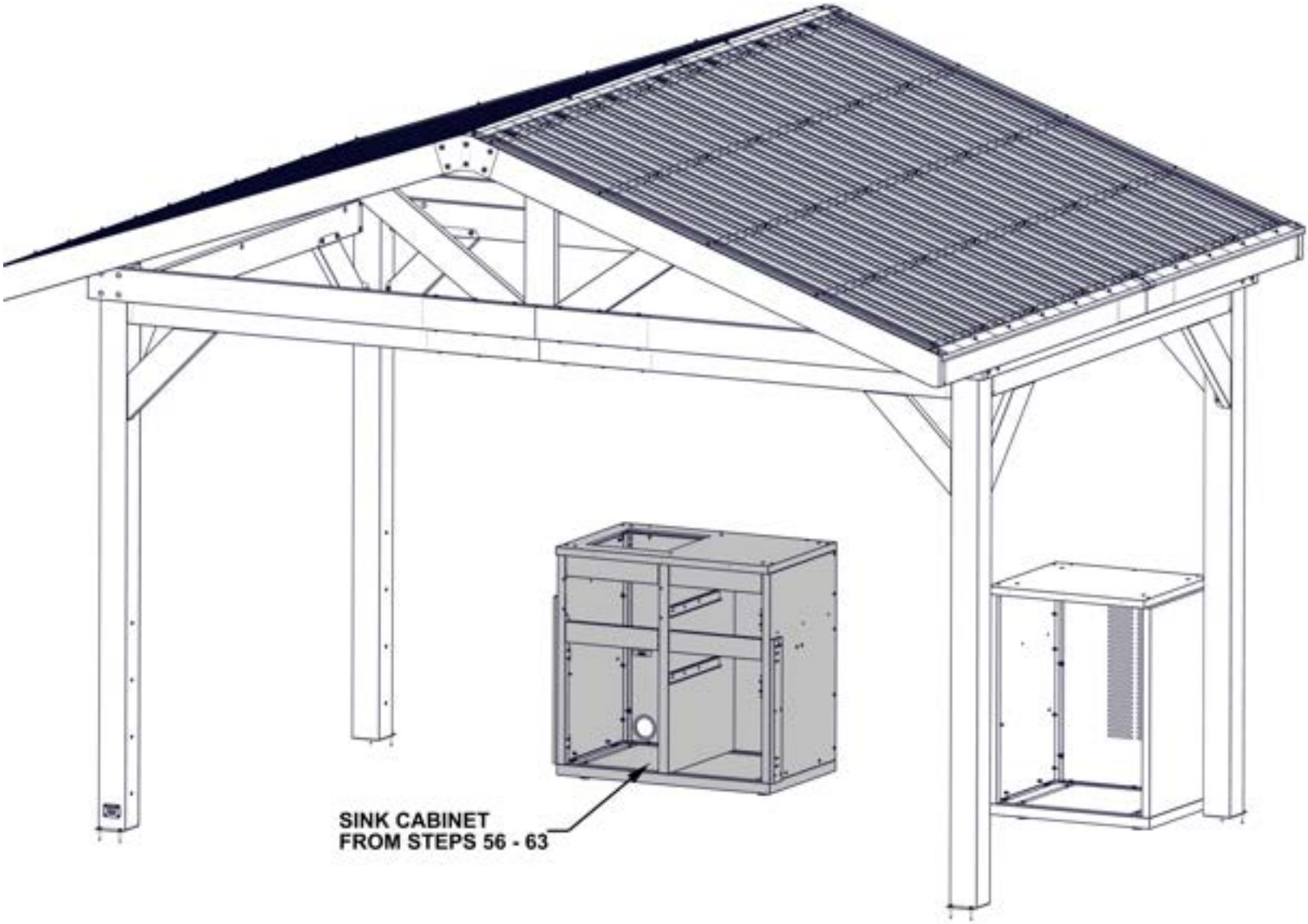

STEP 65 - GRILL CABINET ASSEMBLY

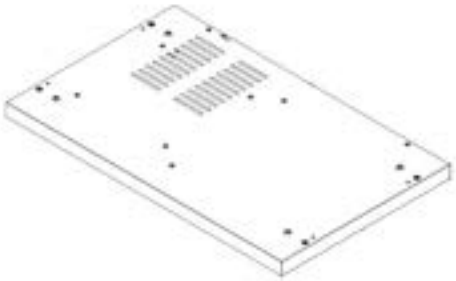

F2 GRILL CABINET FLOOR PANEL ASSEMBLY - A4M03048
(x1) 2 5/8"x23 3/8"x38 1/4" (66x594x972)

- ONLY KITCHEN CABINETS ARE SHOWN FOR DETAIL.
- LOOKING AT THE FRONT SIDE OF THE CABINETS, SLIDE FLOOR PANEL IN BETWEEN SINK AND FRIDGE CABINETS.

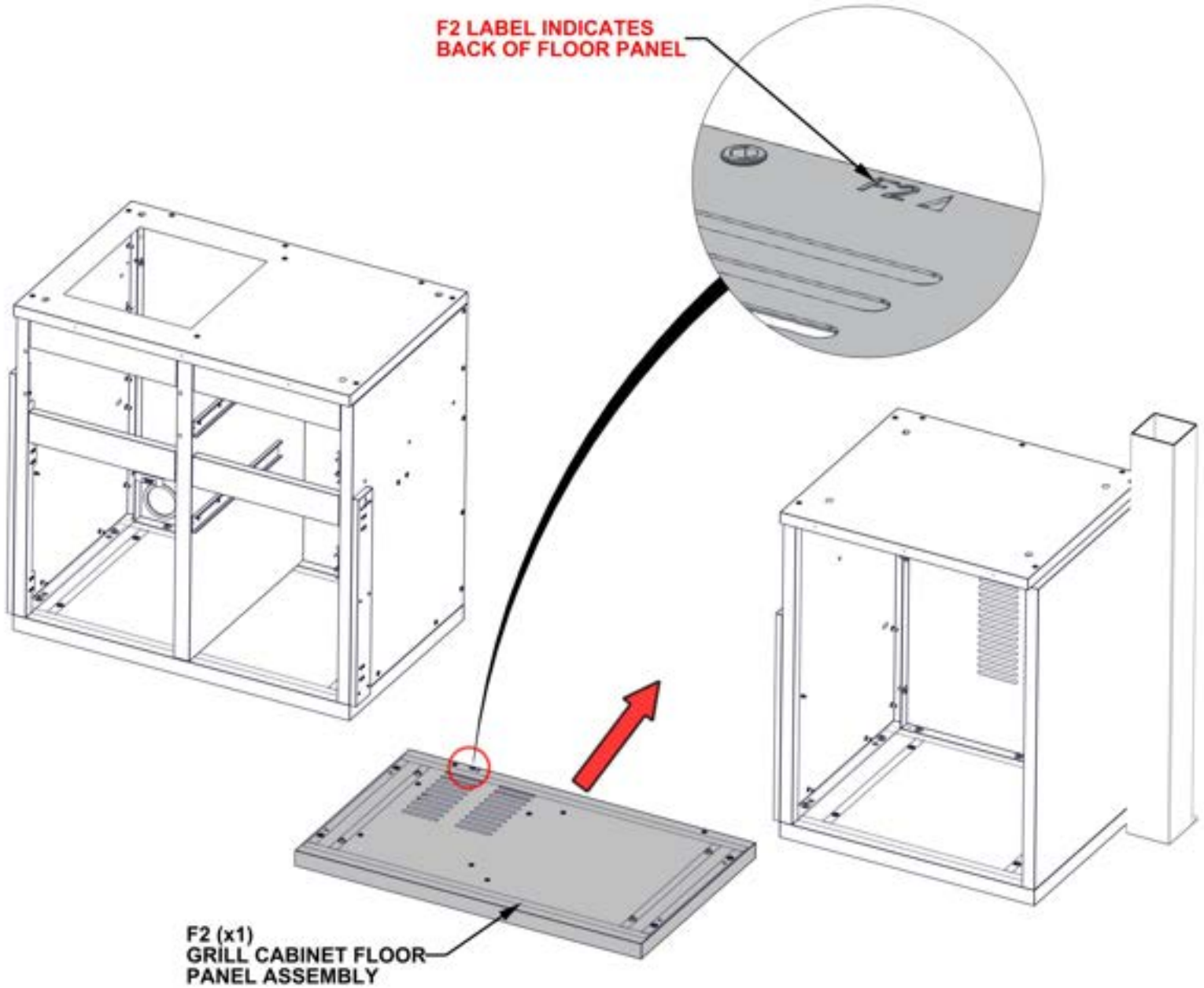

STEP 66 - GRILL CABINET ASSEMBLY

- ONLY KITCHEN CABINETS ARE SHOWN FOR DETAIL.
- POSITION FLOOR PANEL AS SHOWN BELOW.
- EACH FLOOR PANEL HAS FACTORY INSTALLED ADJUSTABLE FEET. USE PROVIDED HEX DRIVER TO ADJUST EACH FOOT UNTIL PANEL IS LEVEL.
- ADJUST LEFT AND RIGHT CORNER CABINET TO ELIMINATE ANY GAPS BETWEEN FLOOR PANEL AND CABINETS.

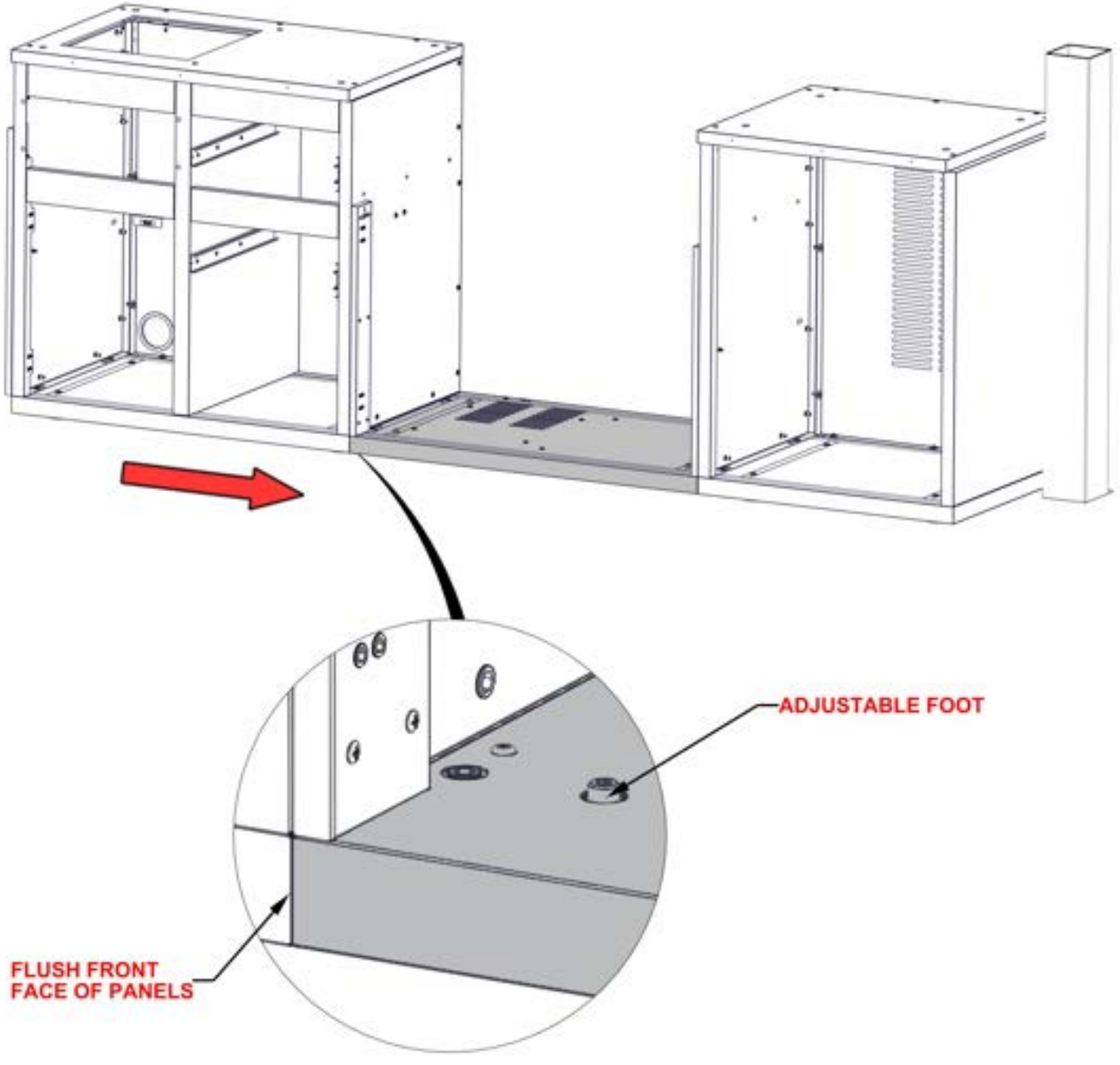

STEP 67 - GRILL CABINET ASSEMBLY

Qty	PartNo	Description
4	H101202	TORX PAN HEAD 1/4-20x3/4 ASSY



A6 ANGLED BRACKET - A4M03053
(x1) 1 3/8"x1 15/16"x17 1/8" (35x50x435)

- ONLY KITCHEN CABINETS ARE SHOWN FOR DETAIL.

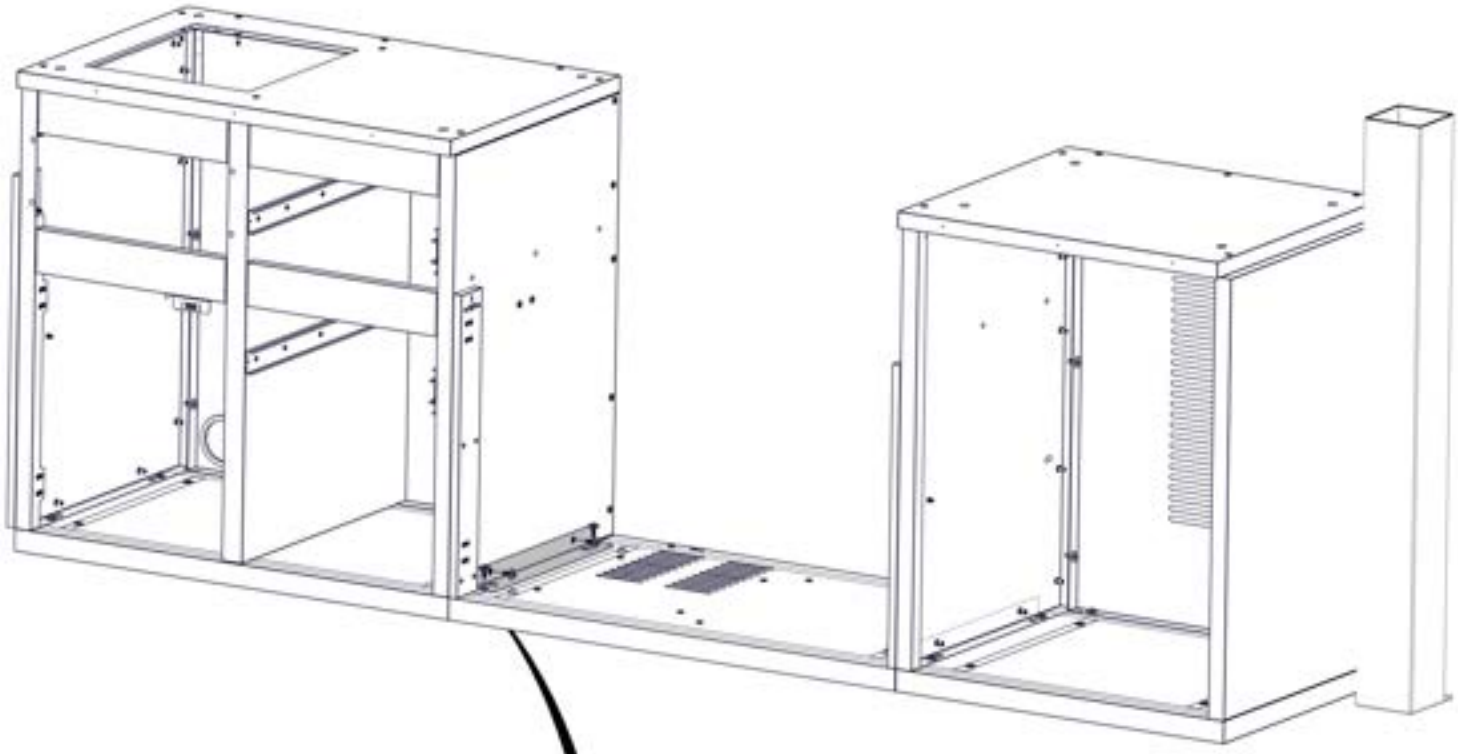

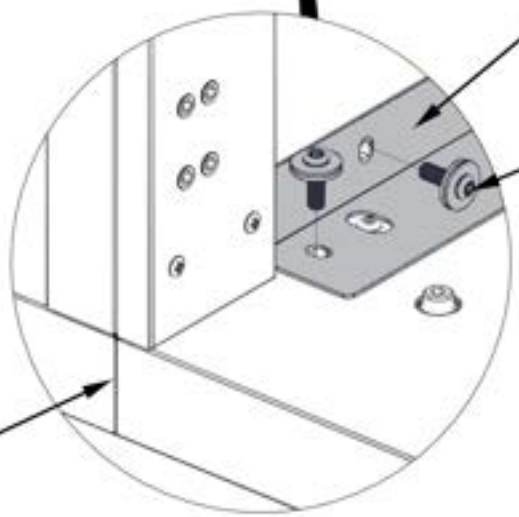

A6 (x1)
ANGLED BRACKET

1202 (x4)
TORX PAN HEAD 1/4-20x3/4 ASSY

MAKE SURE FRONT
FACE OF FLOOR
PANELS ARE FLUSH

STEP 68 - GRILL CABINET ASSEMBLY

Qty	PartNo	Description
4	H101202	TORX PAN HEAD 1/4-20x3/4 ASSY



A6 ANGLED BRACKET - A4M03053
(x1) 1 3/8"x1 15/16"x17 1/8" (35x50x435)

- ONLY KITCHEN CABINETS ARE SHOWN FOR DETAIL.

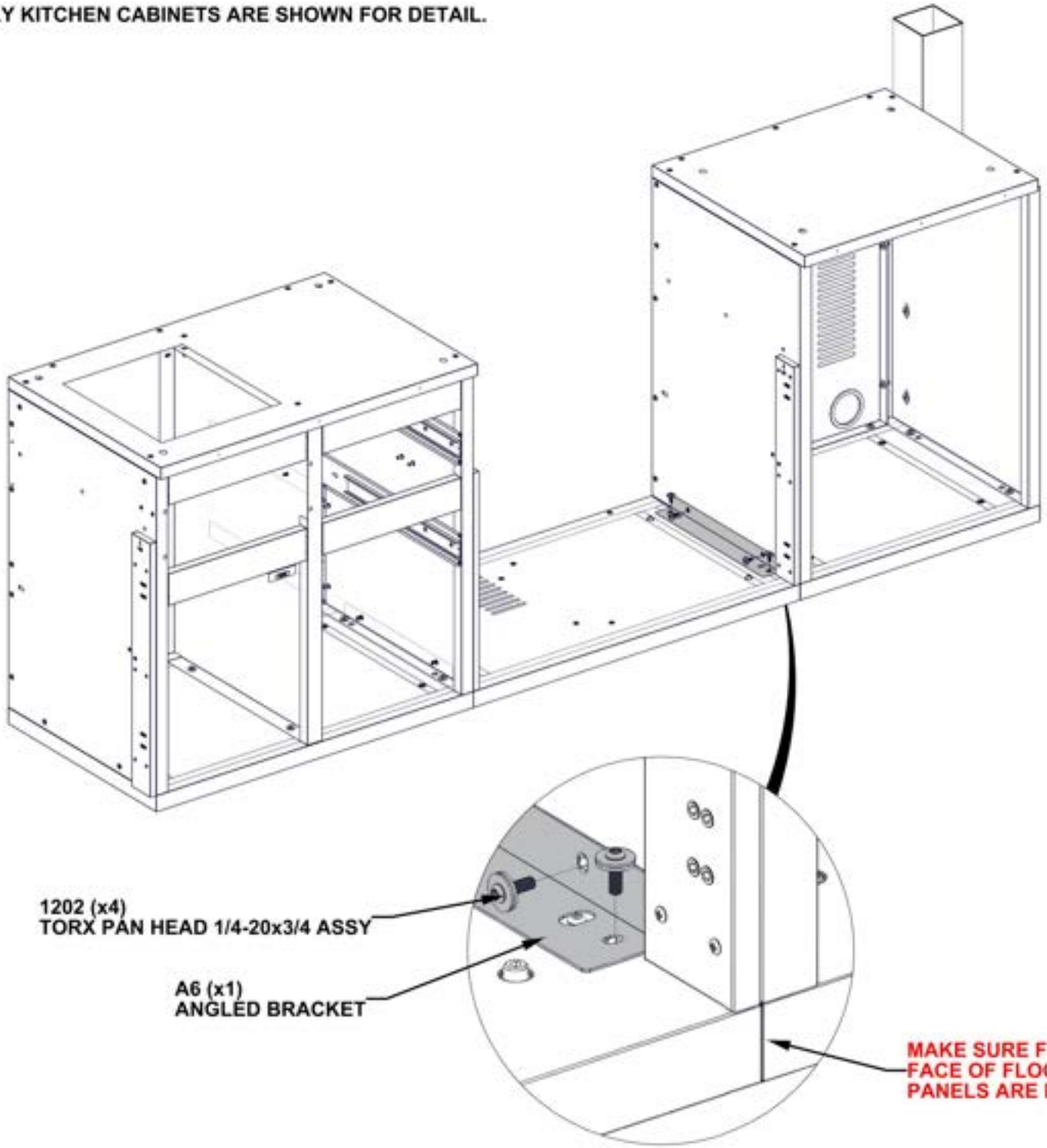

STEP 69 - GRILL CABINET ASSEMBLY

Qty	PartNo	Description
8	H101202	TORX PAN HEAD 1/4-20x3/4 ASSY



G10 GRILL CABINET BACK PANEL ASSEMBLY - A4M03055
(x1) 1 3/16"x22 7/8"x38 3/16" (30x581x970)

- ONLY KITCHEN CABINETS ARE SHOWN FOR DETAIL.

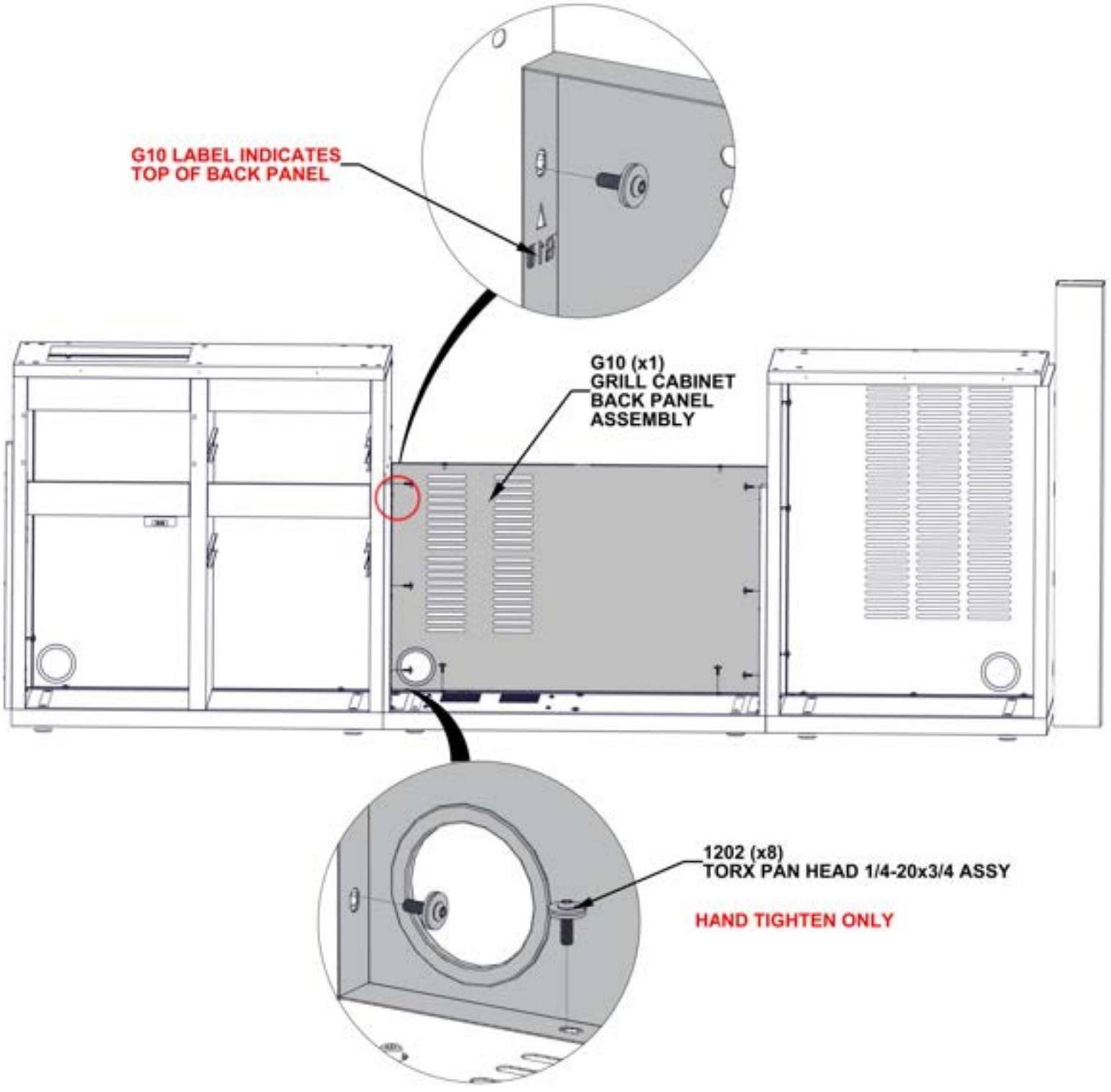

STEP 70 - GRILL CABINET ASSEMBLY

Qty	PartNo	Description
2	H101202	TORX PAN HEAD 1/4-20x3/4 ASSY



S6 GRILL CABINET SIDE PANEL ASSEMBLY M - A4M03586
(x1) 23 3/8"x22 7/8"x1 3/8" (35x581x593)

- ONLY KITCHEN CABINETS ARE SHOWN FOR DETAIL.

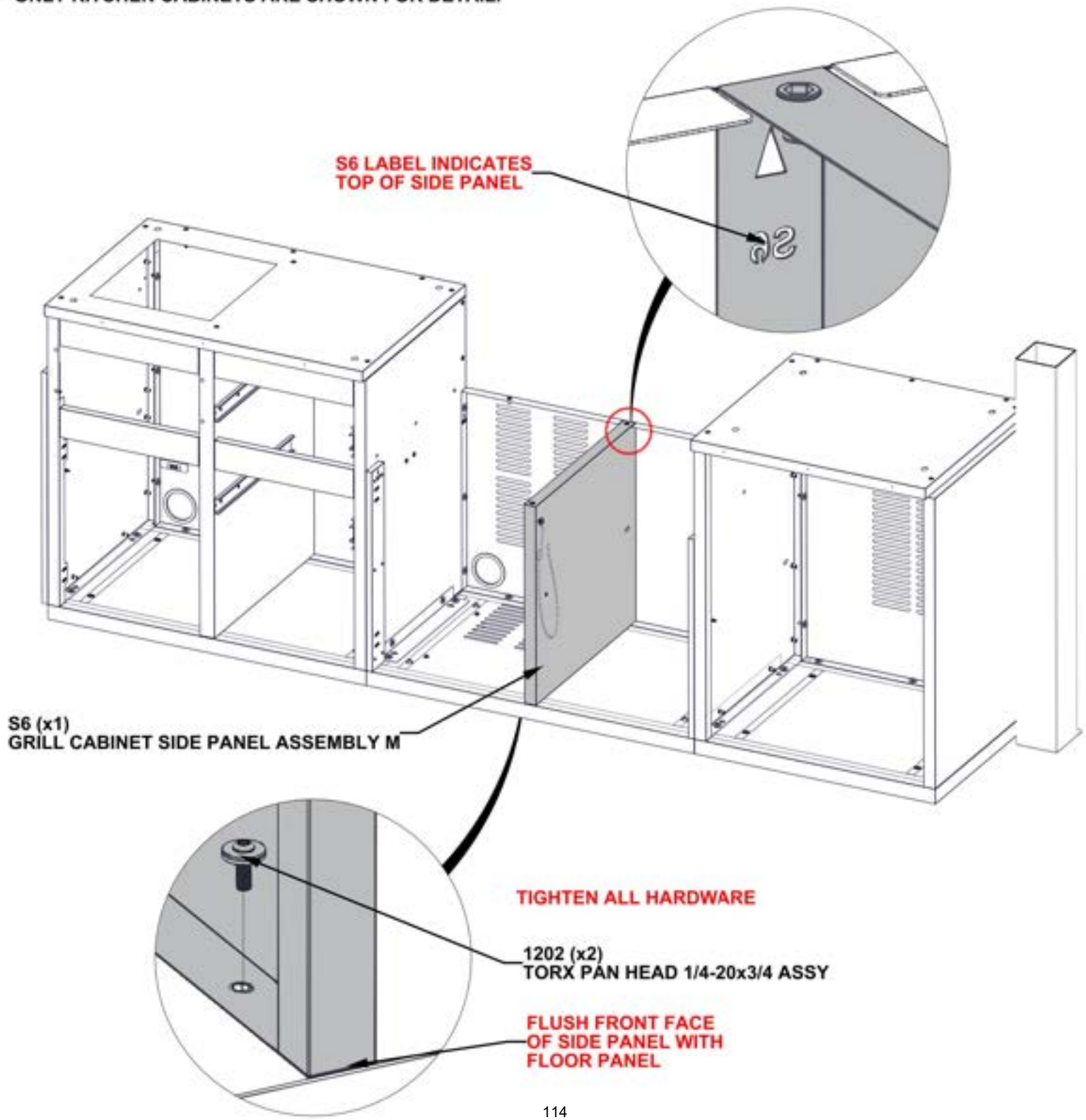

STEP 71A - GRILL CABINET ASSEMBLY



A5 SHELF BRACKET - A4M03141
(x2) 5/8"x7/8"x2 1/16" (16x22x53)

- ONLY KITCHEN CABINETS ARE SHOWN FOR DETAIL.
- ATTACH SHELF BRACKETS ON BOTH SIDES OF CENTER GRILL CABINET.

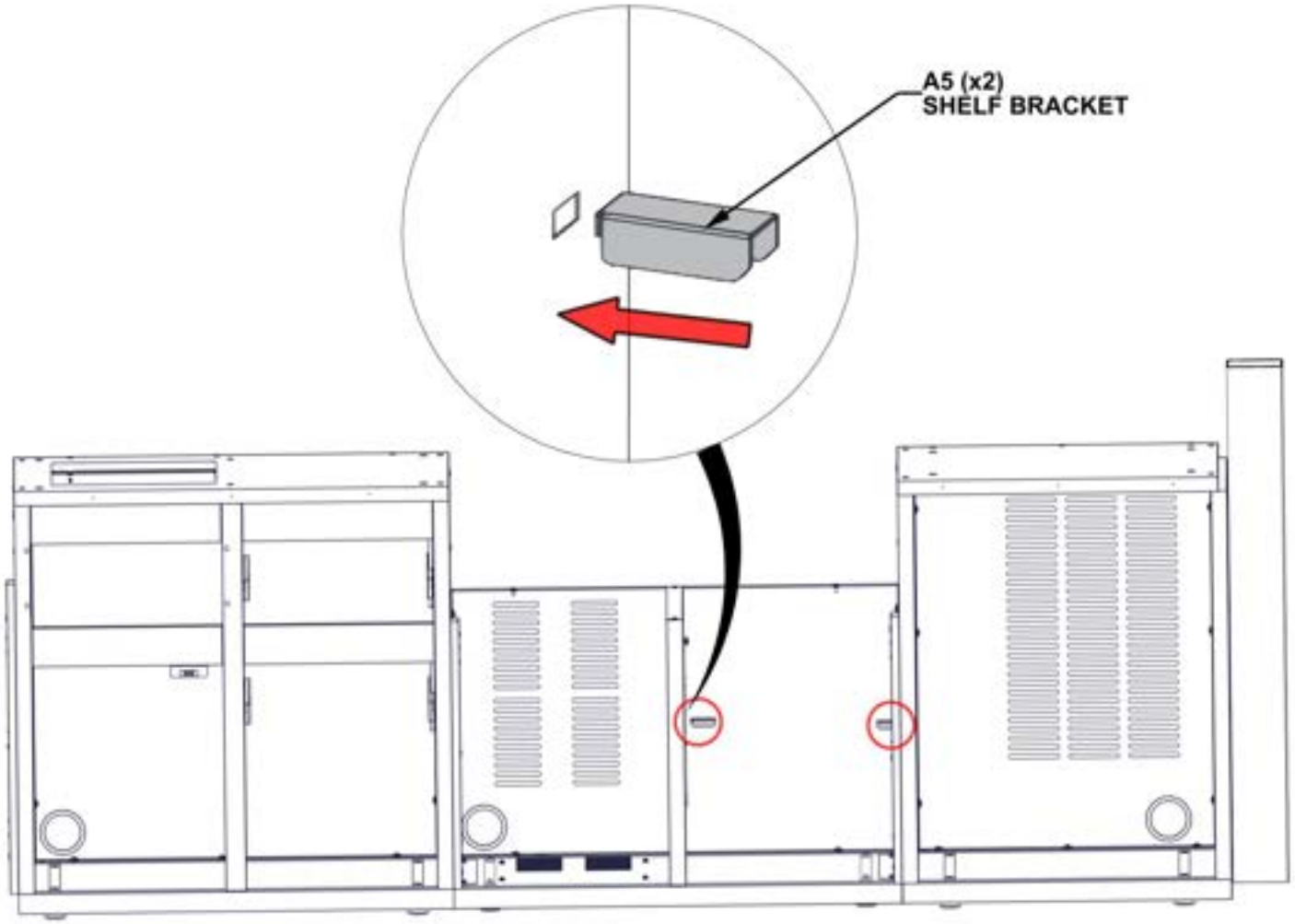

STEP 71B - GRILL CABINET ASSEMBLY

Qty	PartNo	Description
3	H101289	PAN HEAD SCREW 8-32x1/2" SS



L2 GRILL CABINET SHELF ASSEMBLY - A4M03589
(x1) 23 1/4"x18 3/8"x1" (25.00x467.00x591.00)

- ONLY KITCHEN CABINETS ARE SHOWN FOR DETAIL.
- ALIGN SHELF WITH THREADED INSERTS AND ATTACH HARDWARE TO FASTEN IN PLACE.

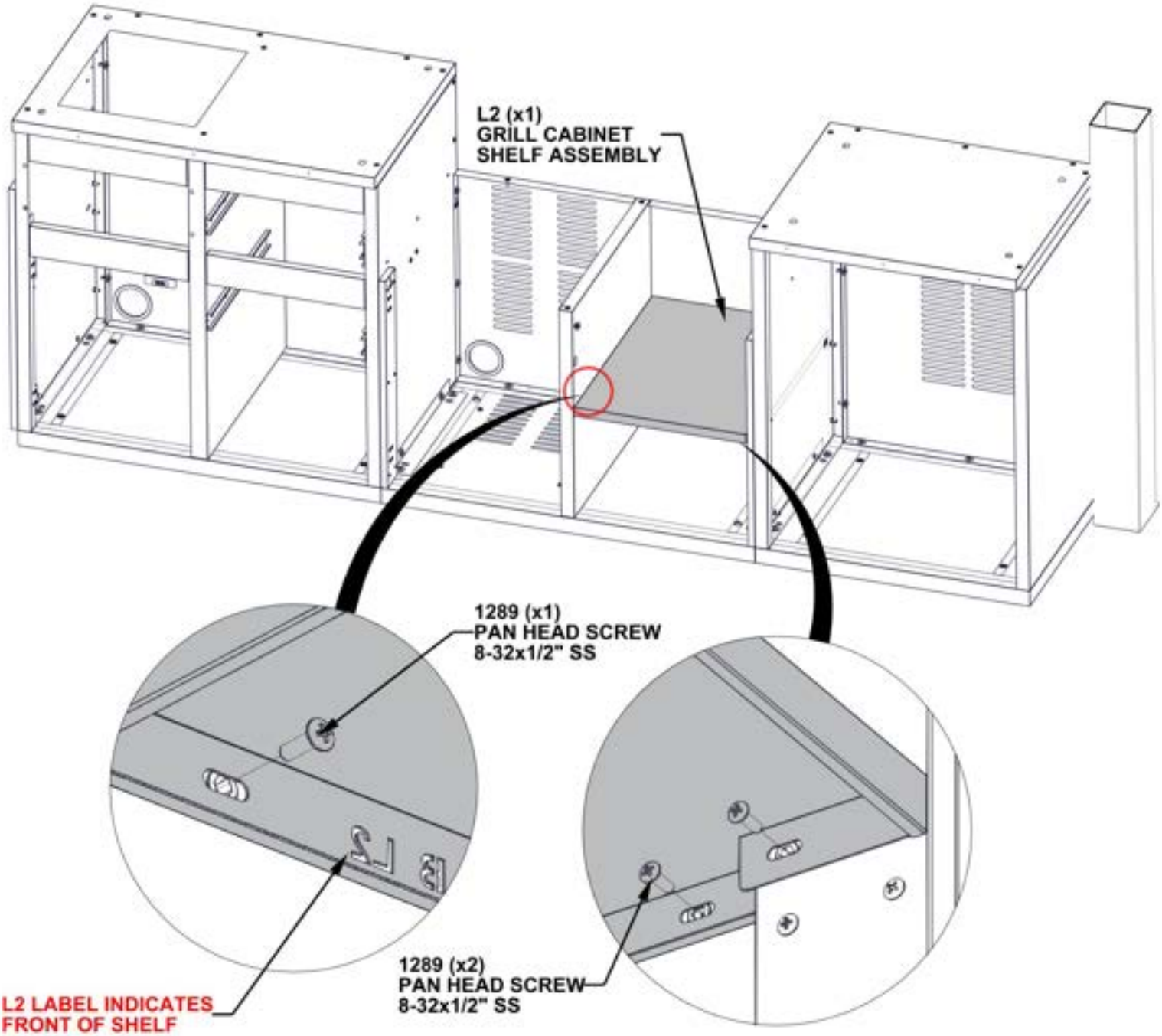

STEP 72 - GRILL CABINET ASSEMBLY

Qty	PartNo	Description
2	H101202	TORX PAN HEAD 1/4-20x3/4 ASSY



A9 HOSE BRACKET ASSEMBLY - A4M03060
(x1) 1 1/4"x1 7/16"x2 9/16" (31.5x36.5x65)

- ONLY KITCHEN CABINETS ARE SHOWN FOR DETAIL.

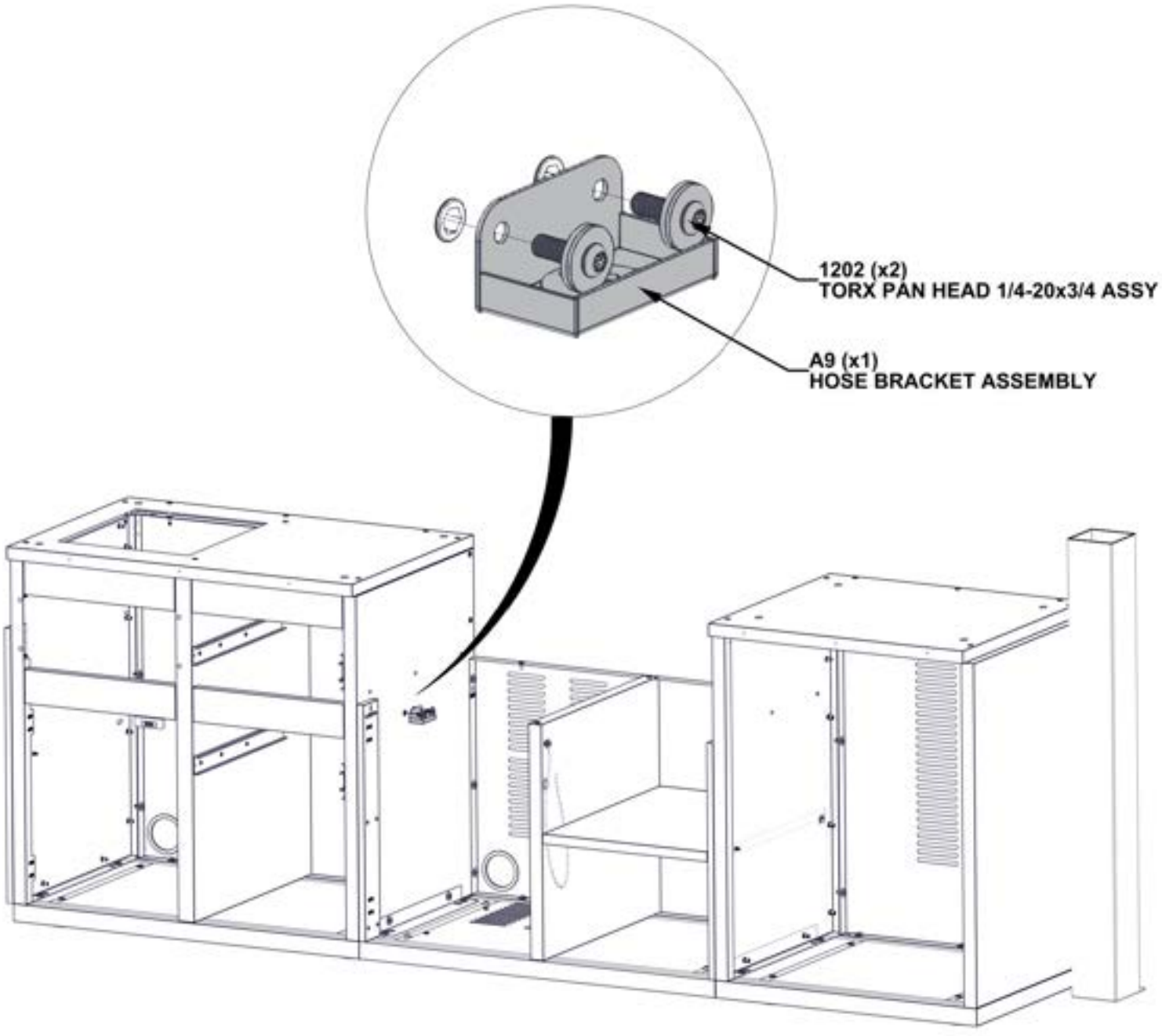

STEP 73 - GRILL CABINET ASSEMBLY

Qty	PartNo	Description
4	H101292	TORX PAN HEAD 1/4-20x13/32"



A13 GAS TANK HOLDER ASSEMBLY - A4M03047
(x1) 1 15/16"x12 7/8"x14 3/4" (49x327x374)

- ONLY KITCHEN CABINETS ARE SHOWN FOR DETAIL.

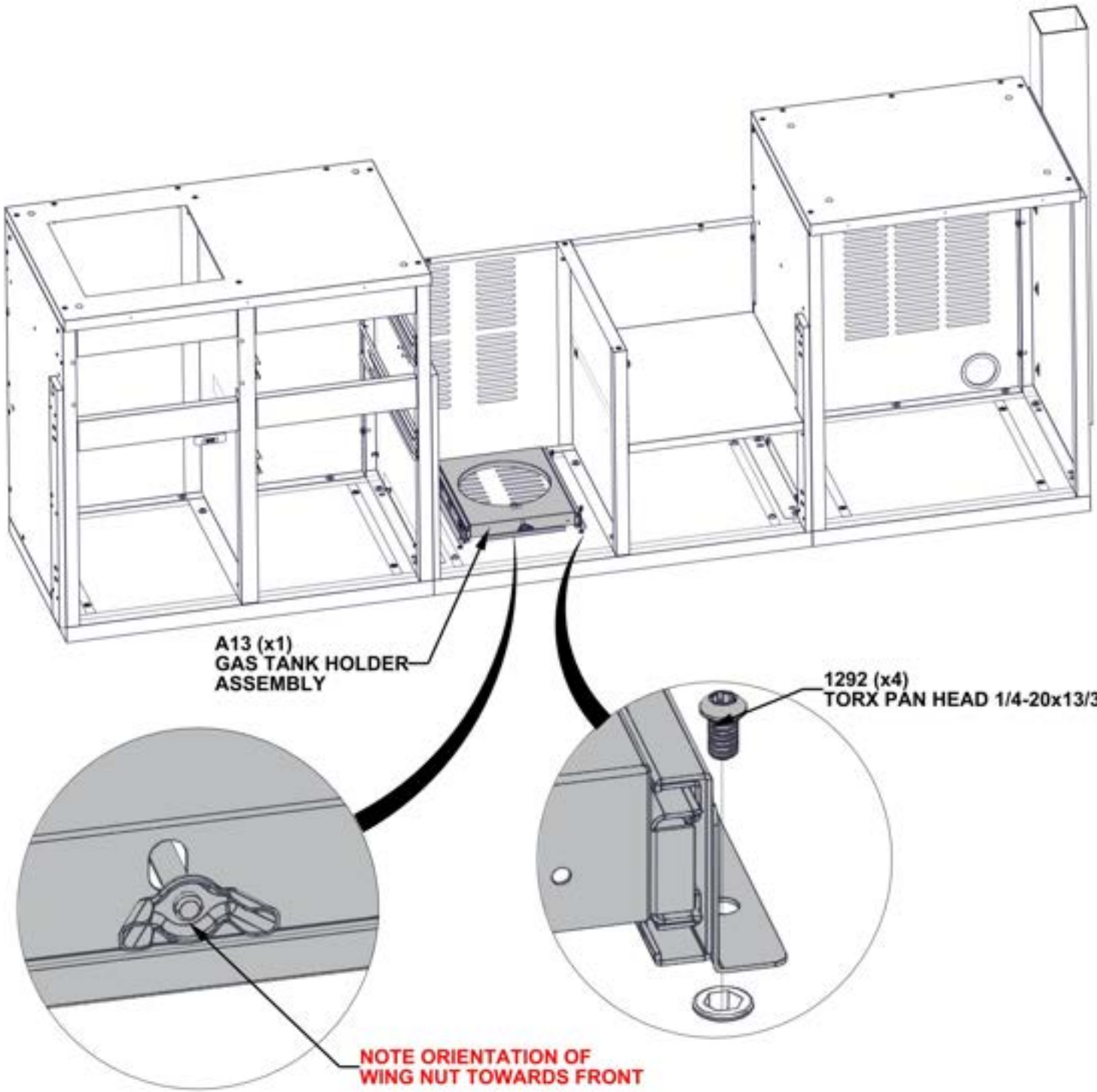

STEP 74 - GRILL CABINET ASSEMBLY

Qty	PartNo	Description
4	H101289	PAN HEAD SCREW 8-32x1/2" SS



T2 GRILL TABLETOP ASSEMBLY - A4M03057
(x1) 1 1/4"x23 3/8"x38 3/16" (32x594x970)



A2 MAGNET BRACKET - A4M03026
(x2) 1"x1 1/4"x3 1/8" (25x31x80)

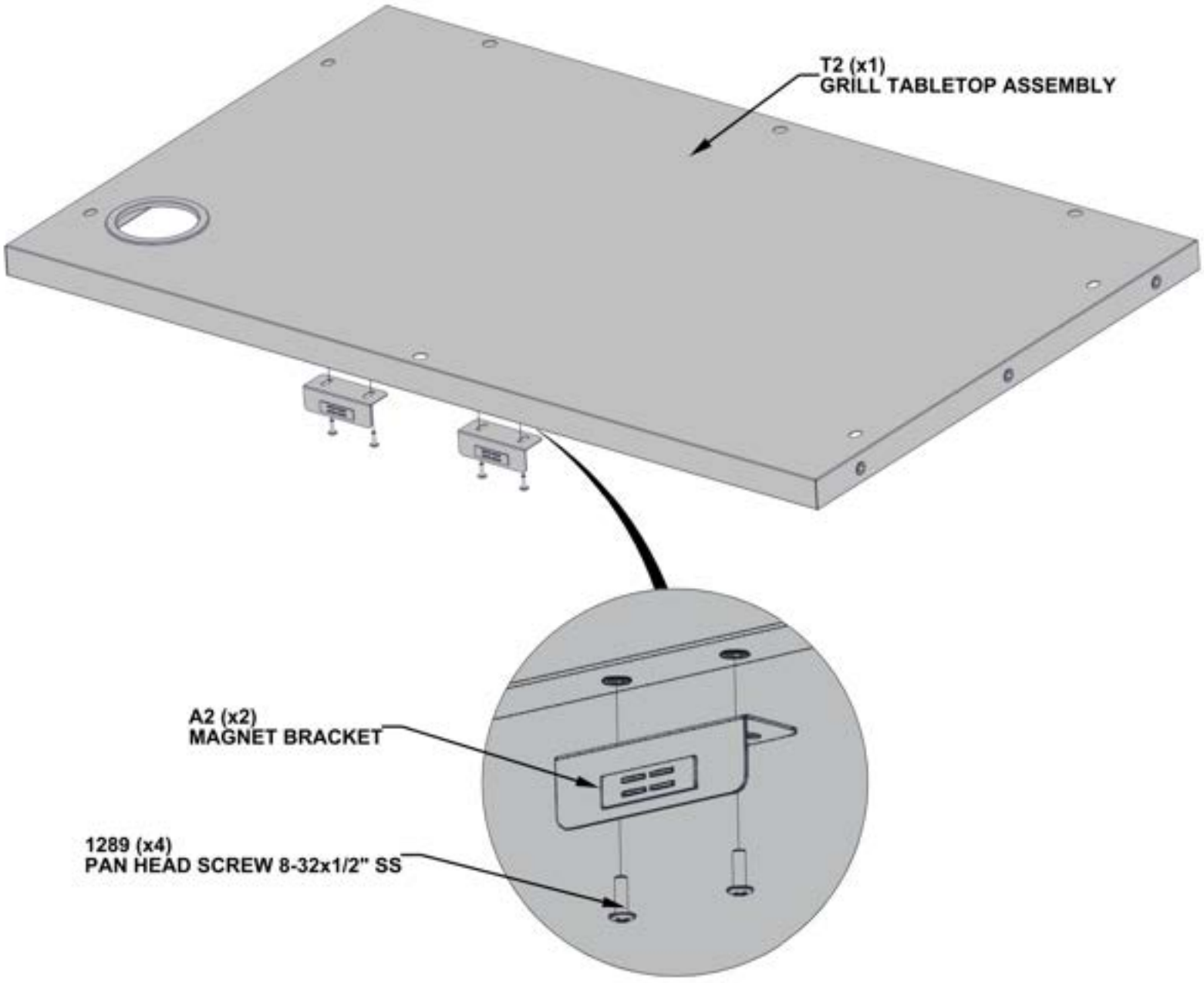

STEP 75A - GRILL CABINET ASSEMBLY

Qty	PartNo	Description
6	H101202	TORX PAN HEAD 1/4-20x3/4 ASSY



GRILL TABLETOP
ASSEMBLY FROM STEP 74

- ONLY KITCHEN CABINETS ARE SHOWN FOR DETAIL.
- HARDWARE ATTACHES ON INSIDE OF CABINET

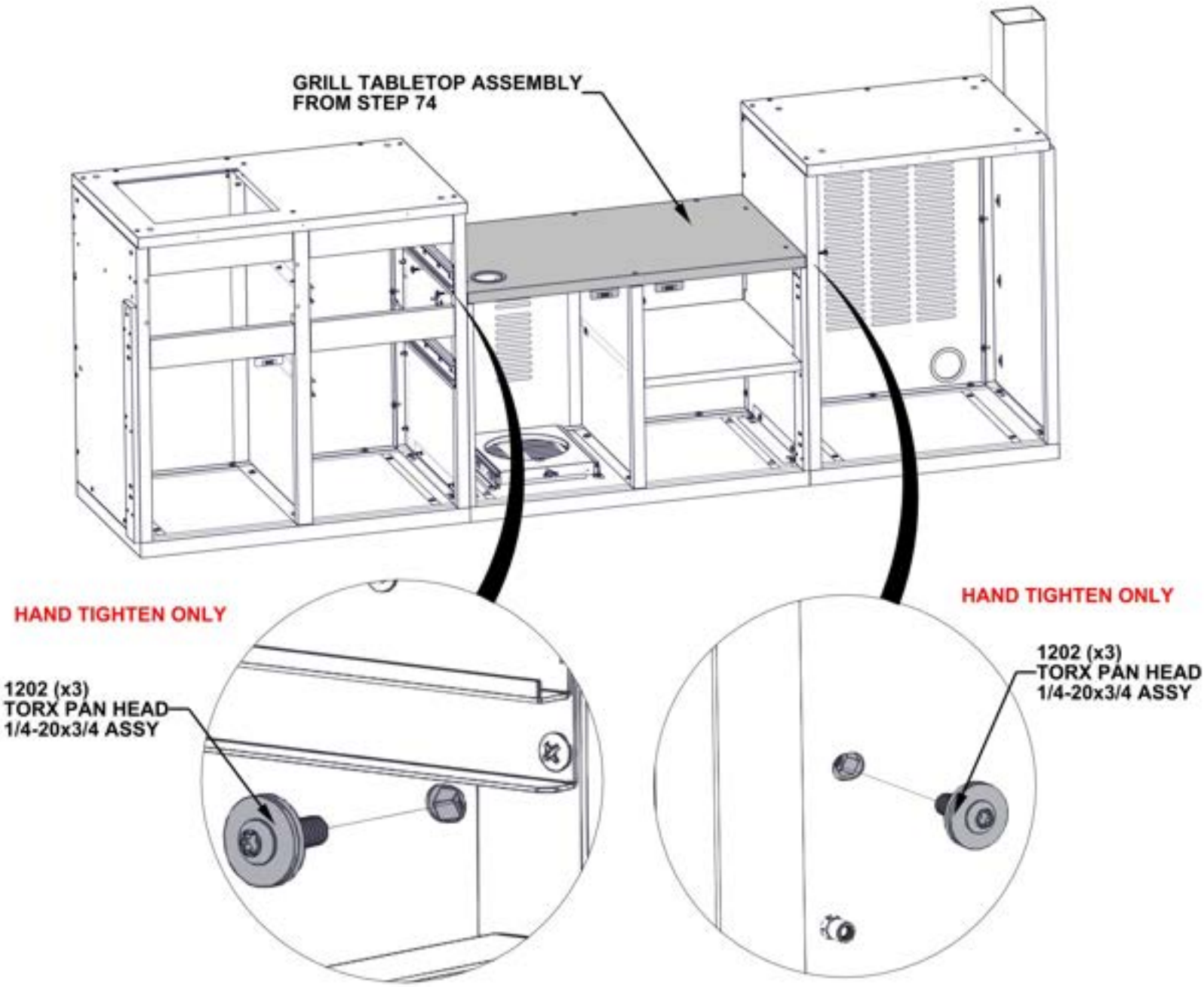

STEP 75B - GRILL CABINET ASSEMBLY

Qty	PartNo	Description
4	H101103	TORX SOCKET SCREW 1/4-20

- ONLY KITCHEN CABINETS ARE SHOWN FOR DETAIL.

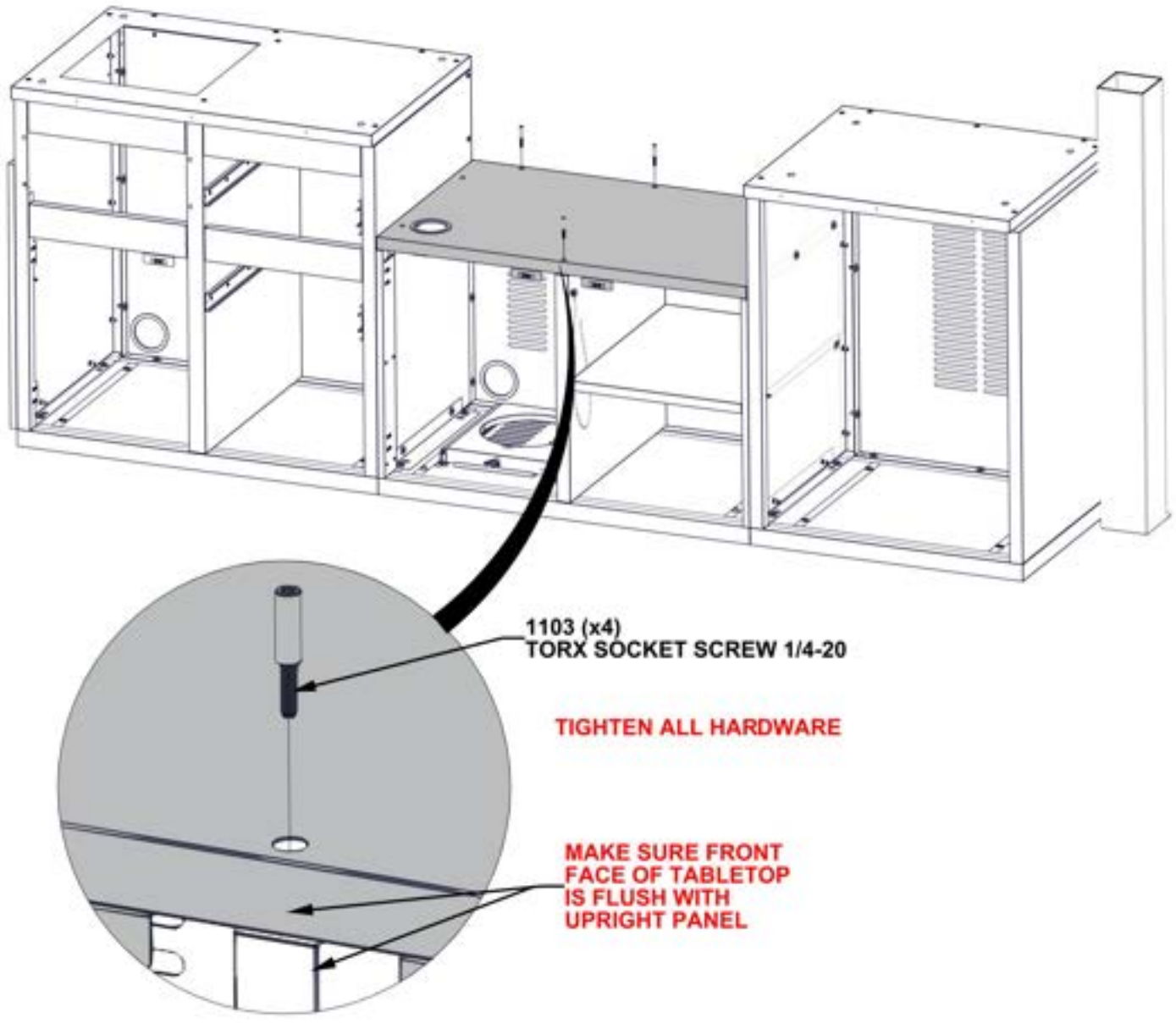

STEP 76 - GRILL CABINET ASSEMBLY

Qty	PartNo	Description
4	H101202	TORX PAN HEAD 1/4-20x3/4 ASSY

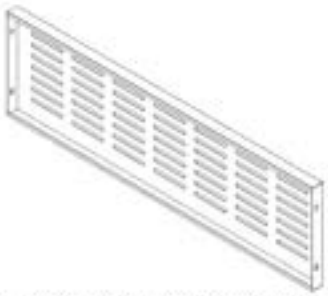

G11 GRILL VENTILATION PANEL - A4M03056
(x1) 1 5/16"x11 3/16"x38 3/16" (33x284x970)

- ONLY KITCHEN CABINETS ARE SHOWN FOR DETAIL.

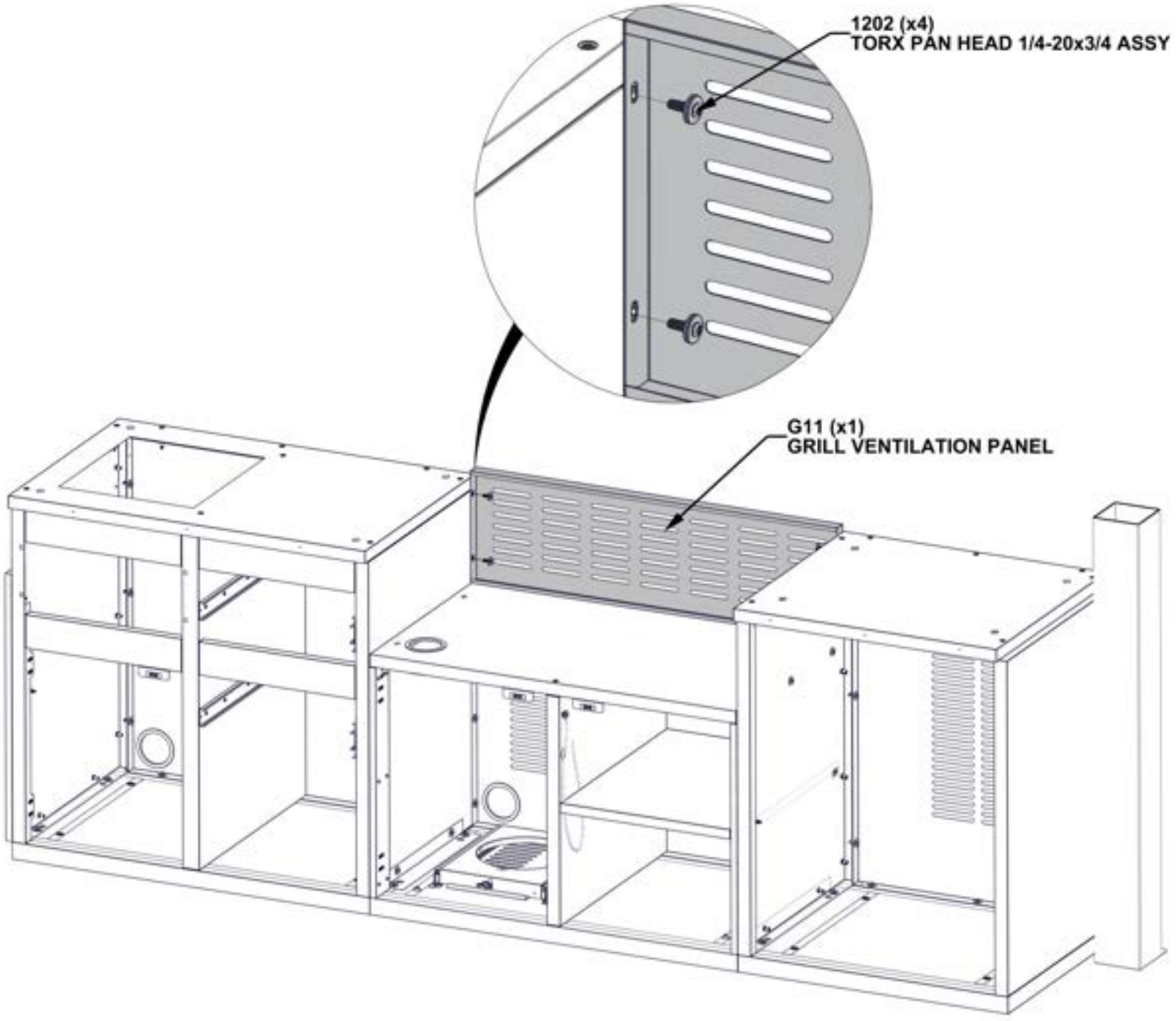

STEP 77A - PIZZA OVEN CABINET ASSEMBLY

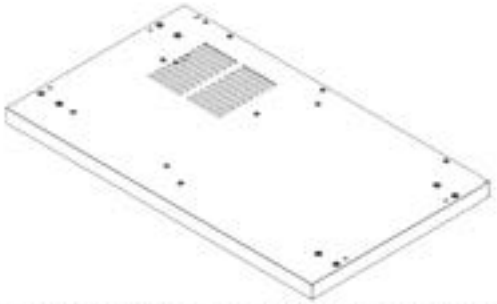

F1 PIZZA OVEN CABINET FLOOR PANEL ASSEMBLY - A4M03538
(x1) 40 3/16"x23 3/8"x2 5/8" (66x594x1020)

- ONLY KITCHEN CABINETS ARE SHOWN FOR DETAIL.
- LOOKING AT THE FRONT SIDE OF THE CABINETS, SLIDE FLOOR PANEL IN BETWEEN P03 POST AND SINK CABINET.

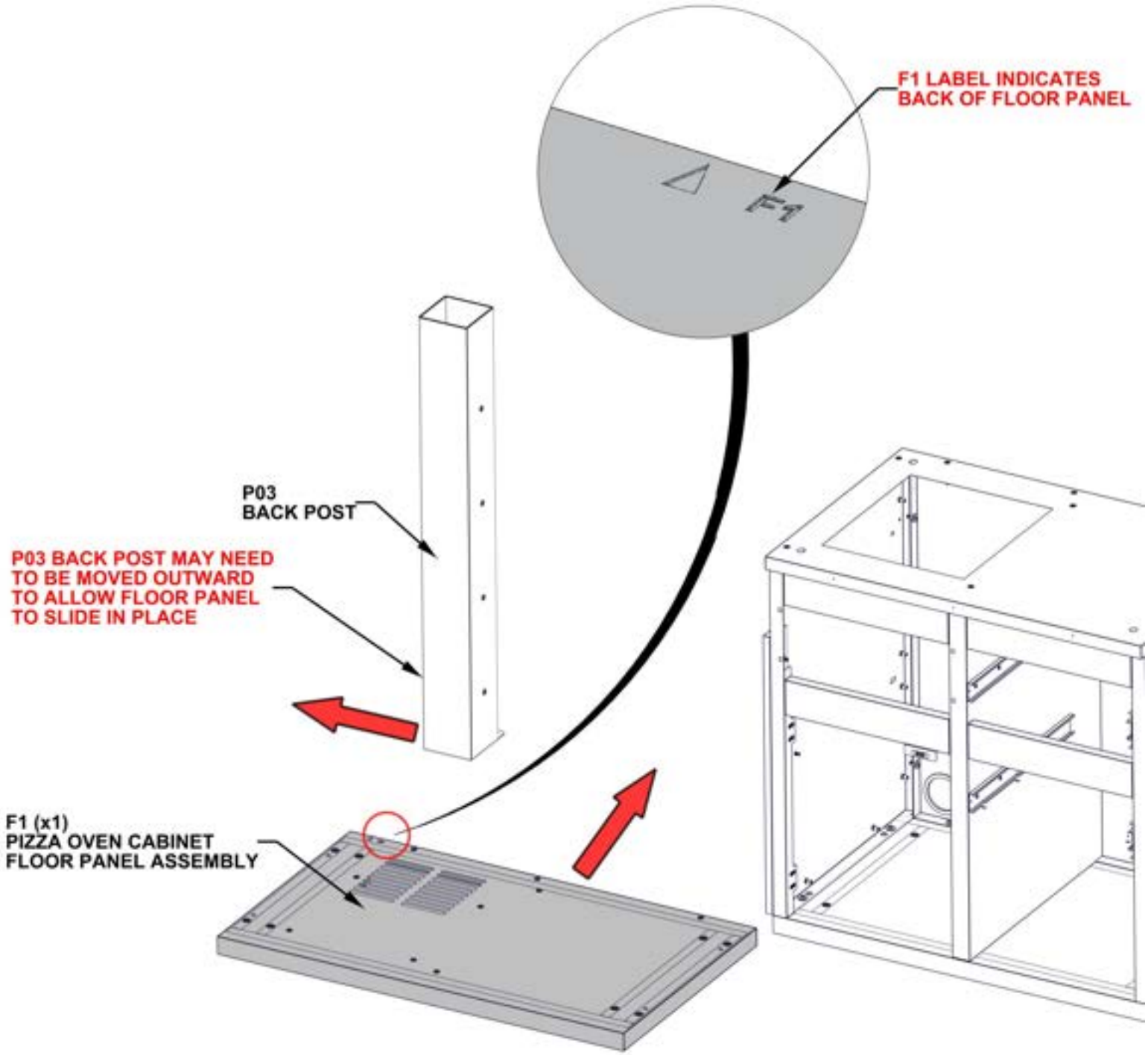

STEP 77B - GRILL CABINET ASSEMBLY

- ONLY KITCHEN CABINETS ARE SHOWN FOR DETAIL.
- POSITION FLOOR PANEL AS SHOWN BELOW.
- EACH FLOOR PANEL HAS FACTORY INSTALLED ADJUSTABLE FEET. USE PROVIDED HEX DRIVER TO ADJUST EACH FOOT UNTIL PANEL IS LEVEL.
- ADJUST LEFT AND RIGHT CORNER CABINET TO ELIMINATE ANY GAPS BETWEEN FLOOR PANEL AND CABINETS.

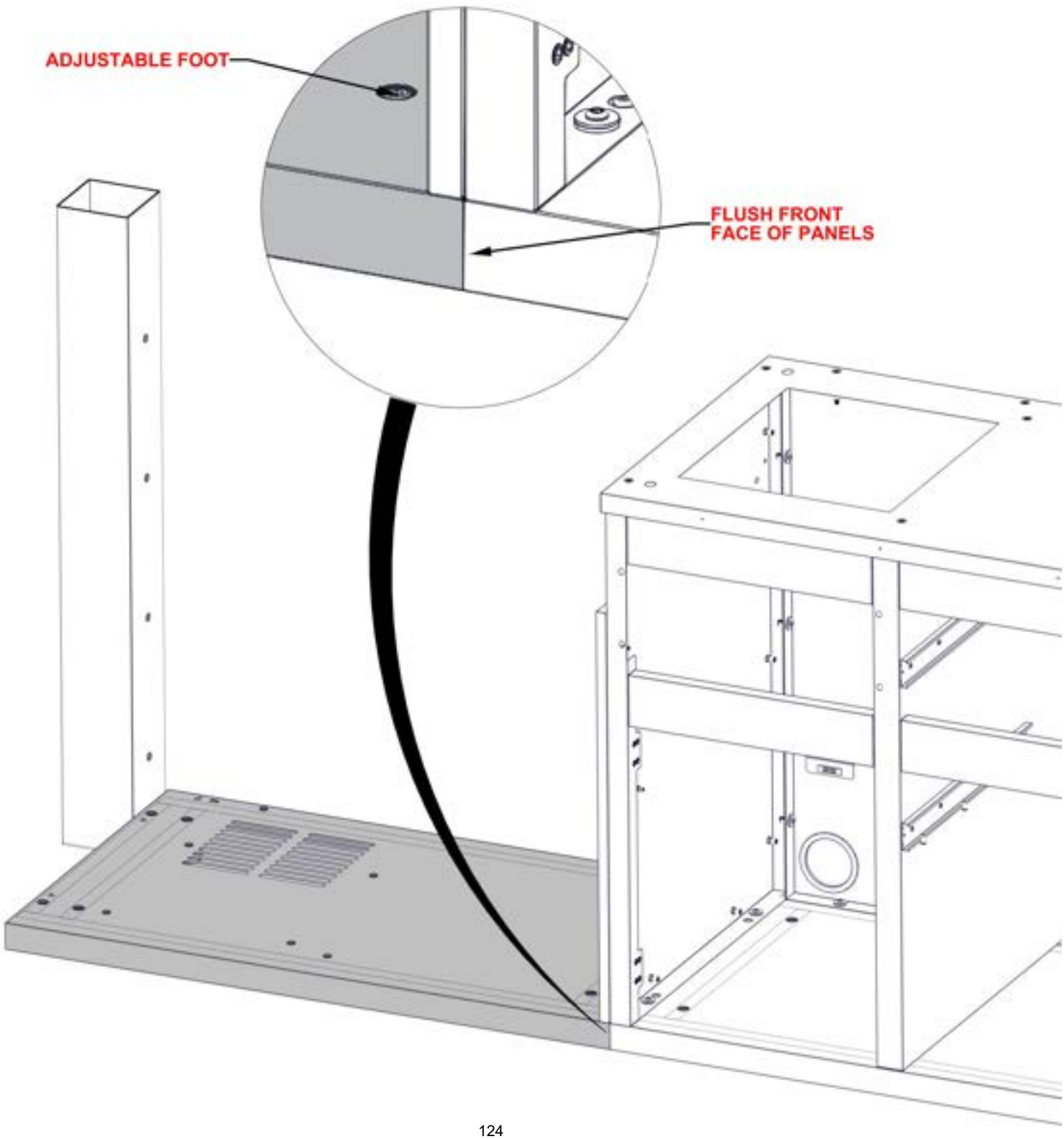

STEP 78 - PIZZA OVEN CABINET ASSEMBLY



A6 ANGLED BRACKET - A4M03053
(x1) 1 3/8"x1 15/16"x17 1/8" (35x50x435)

Qty	PartNo	Description
4	H101202	TORX PAN HEAD 1/4-20x3/4 ASSY

- ONLY KITCHEN CABINETS ARE SHOWN FOR DETAIL.

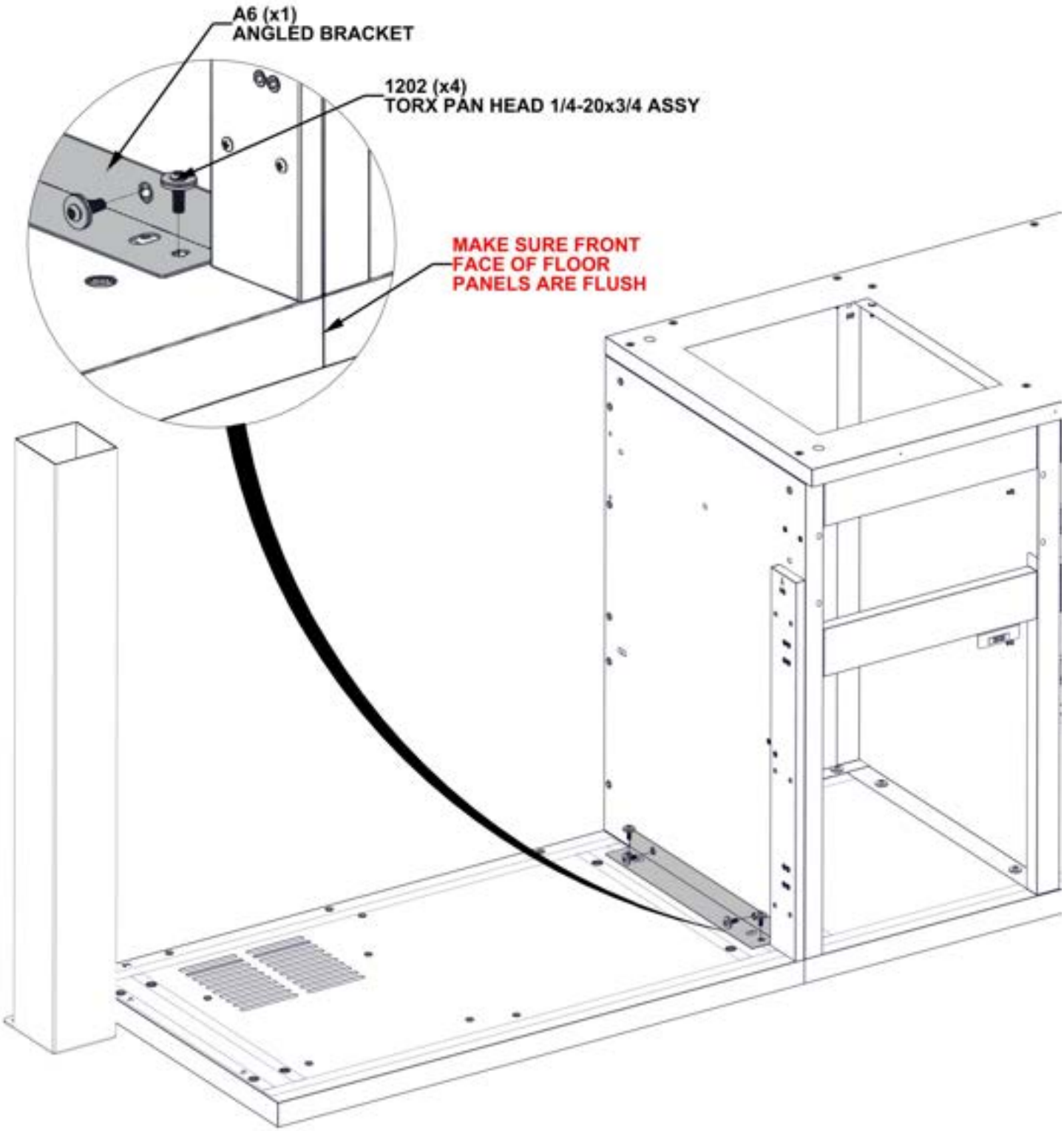

STEP 79 - PIZZA OVEN CABINET ASSEMBLY



Qty	PartNo	Description
5	H101202	TORX PAN HEAD 1/4-20x3/4 ASSY

S1 PIZZA OVEN CABINET SIDE PANEL ASSEMBLY - A4M03540
(x1) 26 9/16"x23 3/8"x1 3/8" (35x594x675)

- ONLY KITCHEN CABINETS ARE SHOWN FOR DETAIL.

SLOTS IN SIDE PANEL WILL ALIGN WITH THREADED INSERTS IN BACK POST

1202 (x2) TORX PAN HEAD 1/4-20x3/4 ASSY

HAND TIGHTEN ONLY

1202 (x3) TORX PAN HEAD 1/4-20x3/4 ASSY

HAND TIGHTEN ONLY

FLUSH FRONT FACE OF SIDE PANEL WITH FLOOR PANEL

S1 LABEL INDICATES BOTTOM FRONT OF SIDE PANEL

S1 (x1) PIZZA OVEN CABINET SIDE PANEL ASSEMBLY

STEP 80 - PIZZA OVEN CABINET ASSEMBLY



Qty	PartNo	Description
9	H101202	TORX PAN HEAD 1/4-20x3/4 ASSY

G1 PIZZA OVEN CABINET BACK PANEL ASSEMBLY - A4M03542
(x1) 38 3/4"x26 1/2"x1 3/16" (30x673.5x984)

- ONLY KITCHEN CABINETS ARE SHOWN FOR DETAIL.

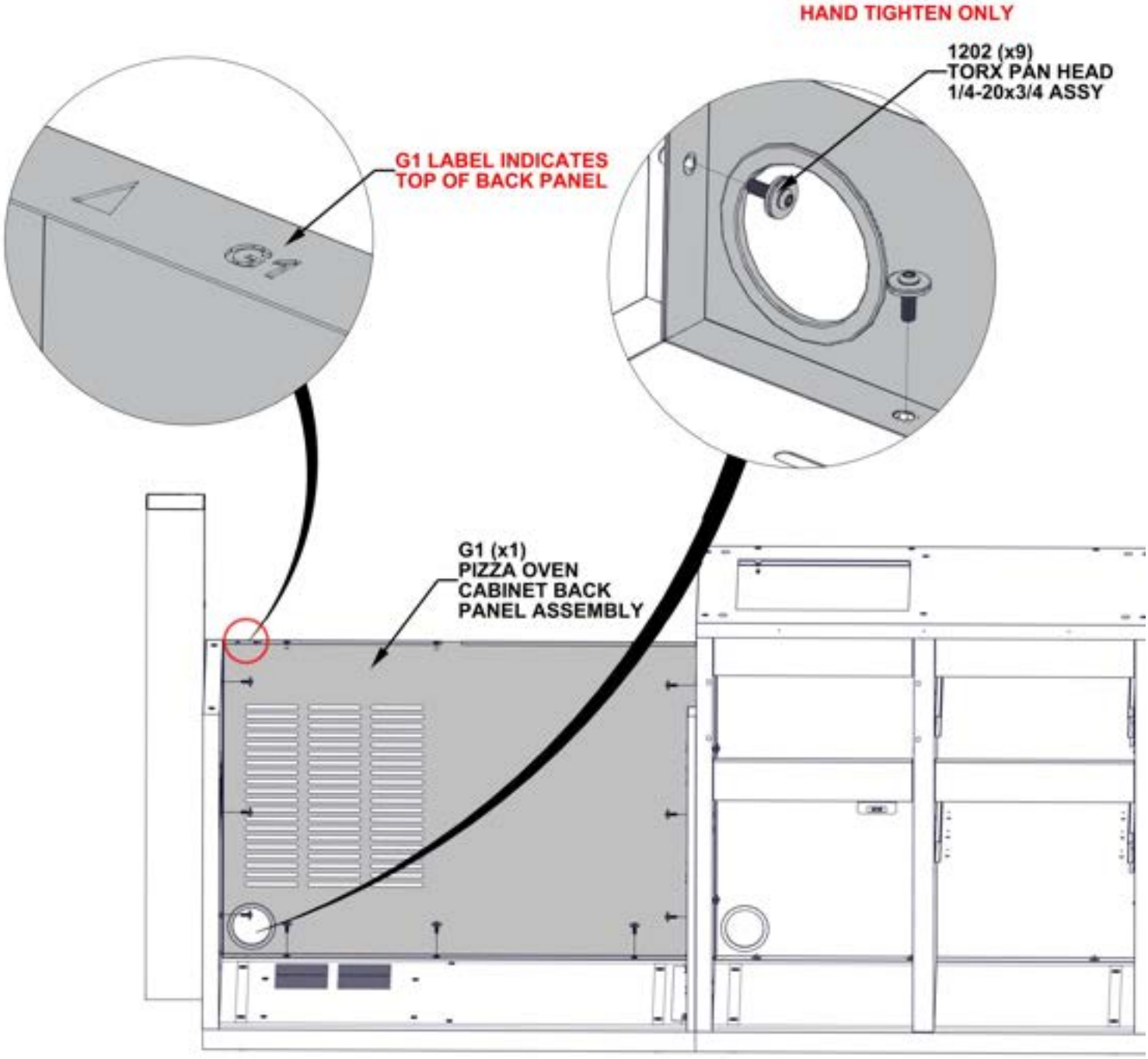

STEP 81 - PIZZA OVEN CABINET ASSEMBLY



Qty	PartNo	Description
2	H101202	TORX PAN HEAD 1/4-20x3/4 ASSY

S2 PIZZA OVEN CABINET SIDE PANEL ASSEMBLY M - A4M03545
(x1) 26 1/2"x23 3/8"x1 3/8" (35x593x673.5)

- ONLY KITCHEN CABINETS ARE SHOWN FOR DETAIL.

S2 LABEL INDICATES TOP OF SIDE PANEL

S2 (x1)
PIZZA OVEN CABINET
SIDE PANEL ASSEMBLY M

1202 (x2)
TORX PAN HEAD 1/4-20x3/4 ASSY

TIGHTEN ALL HARDWARE

FLUSH FRONT FACE OF SIDE PANEL WITH FLOOR PANEL

STEP 82A - PIZZA OVEN CABINET ASSEMBLY



A5 SHELF BRACKET - A4M03141
(x2) 5/8"x7/8"x2 1/16" (16x22x53)

- ONLY KITCHEN CABINETS ARE SHOWN FOR DETAIL.
- ATTACH SHELF BRACKETS ON BOTH SIDES OF CENTER PIZZA OVEN CABINET.

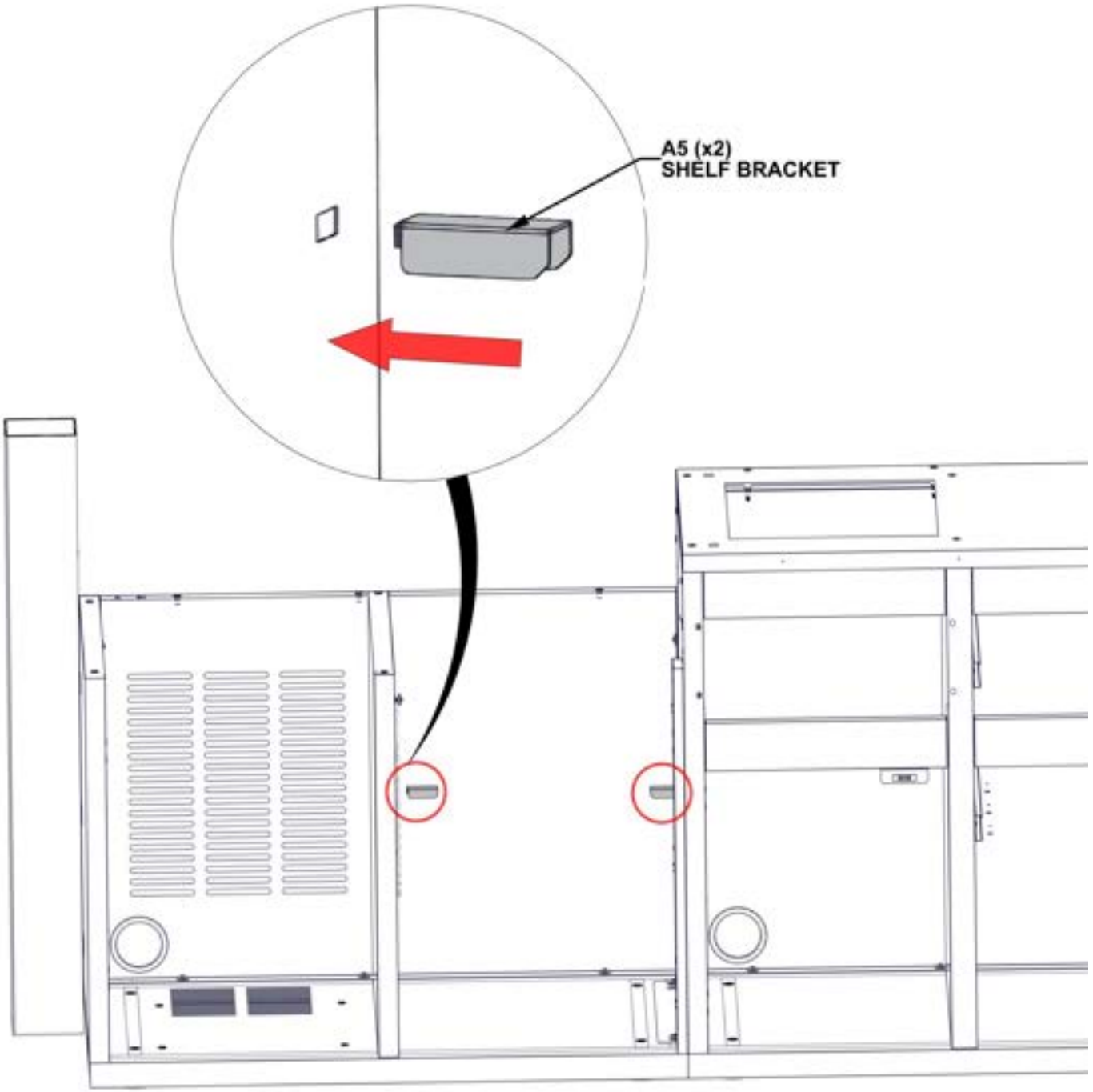

STEP 82B - PIZZA OVEN CABINET ASSEMBLY



L1 PIZZA OVEN CABINET SHELF - A4M03548
(x1) 23 1/4"x19 5/16"x1" (25.00x490.50x591.00)

Qty	PartNo	Description
3	H101289	PAN HEAD SCREW 8-32x1/2" SS

- ONLY KITCHEN CABINETS ARE SHOWN FOR DETAIL.
- ALIGN SHELF WITH THREADED INSERTS AND ATTACH HARDWARE TO FASTEN IN PLACE.

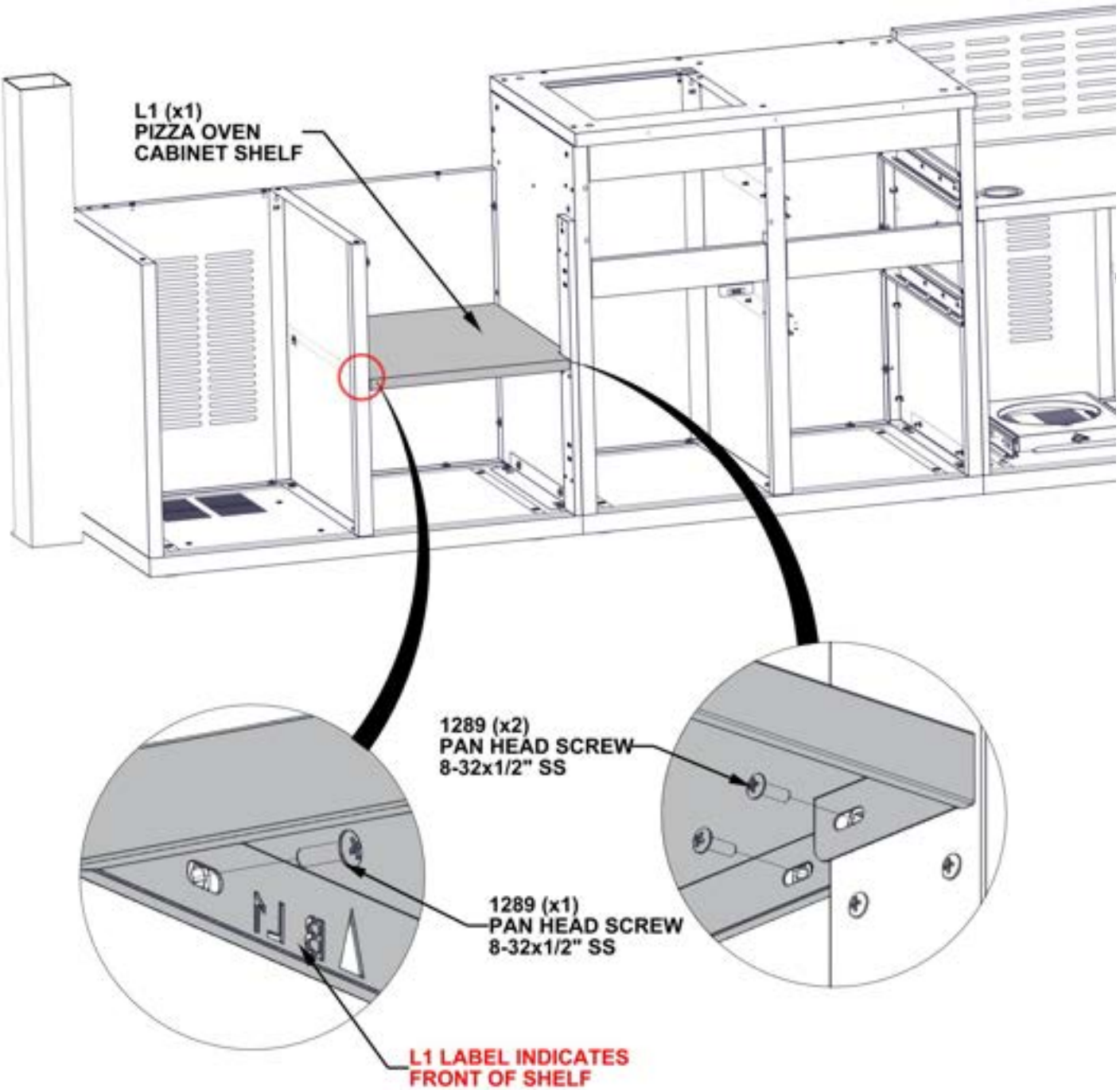

STEP 83 - PIZZA OVEN CABINET ASSEMBLY



A9 HOSE BRACKET ASSEMBLY - A4M03060
(x1) 1 1/4"x1 7/16"x2 9/16" (31.5x36.5x65)

Qty	PartNo	Description
2	H101202	TORX PAN HEAD 1/4-20x3/4 ASSY

- ONLY KITCHEN CABINETS ARE SHOWN FOR DETAIL.

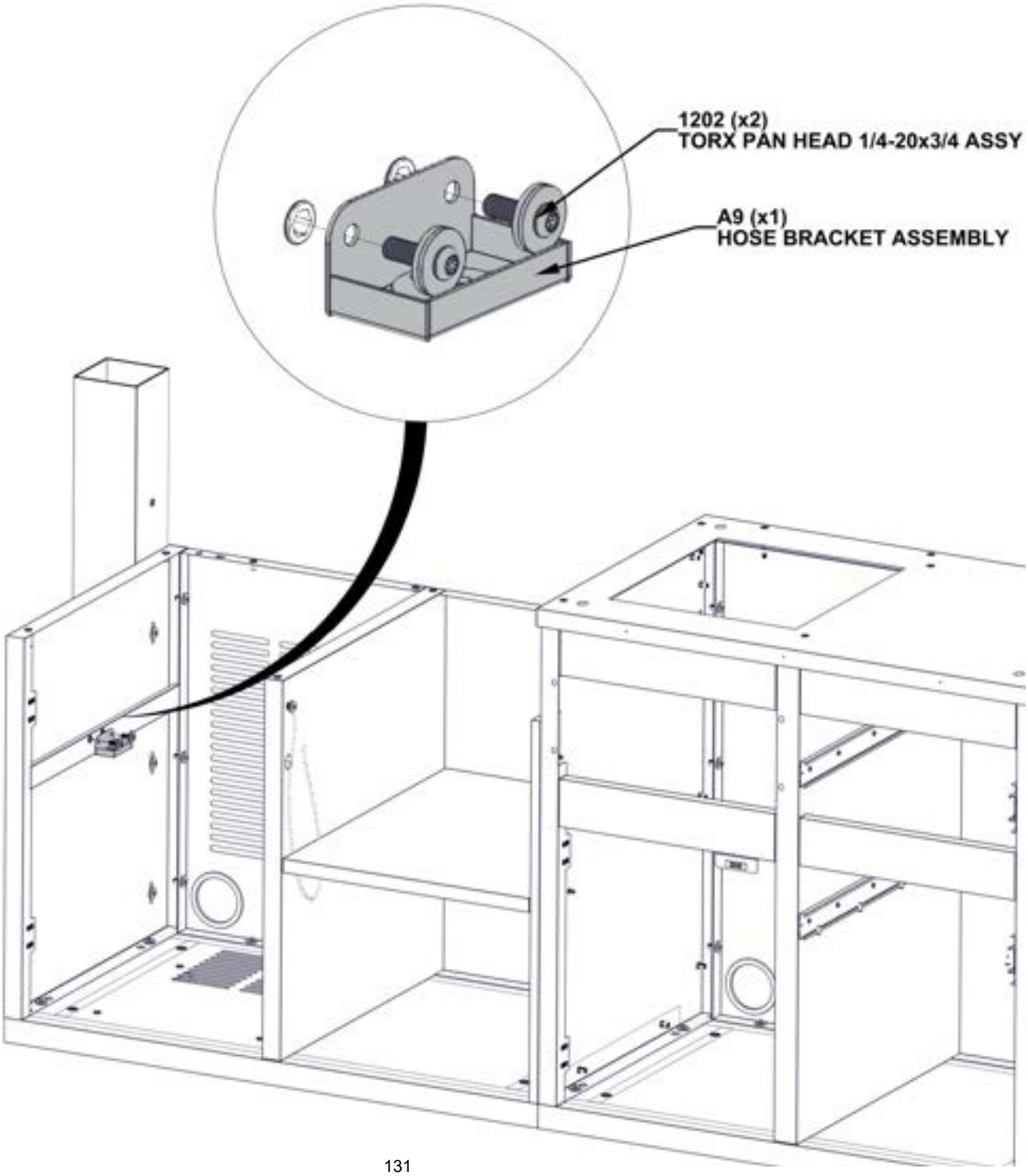

STEP 84 - GRILL CABINET ASSEMBLY



A13 GAS TANK HOLDER ASSEMBLY - A4M03047
(x1) 1 15/16"x12 7/8"x14 3/4" (49x327x374)

Qty	PartNo	Description
4	H101292	TORX PAN HEAD 1/4-20x13/32"

- ONLY KITCHEN CABINETS ARE SHOWN FOR DETAIL.

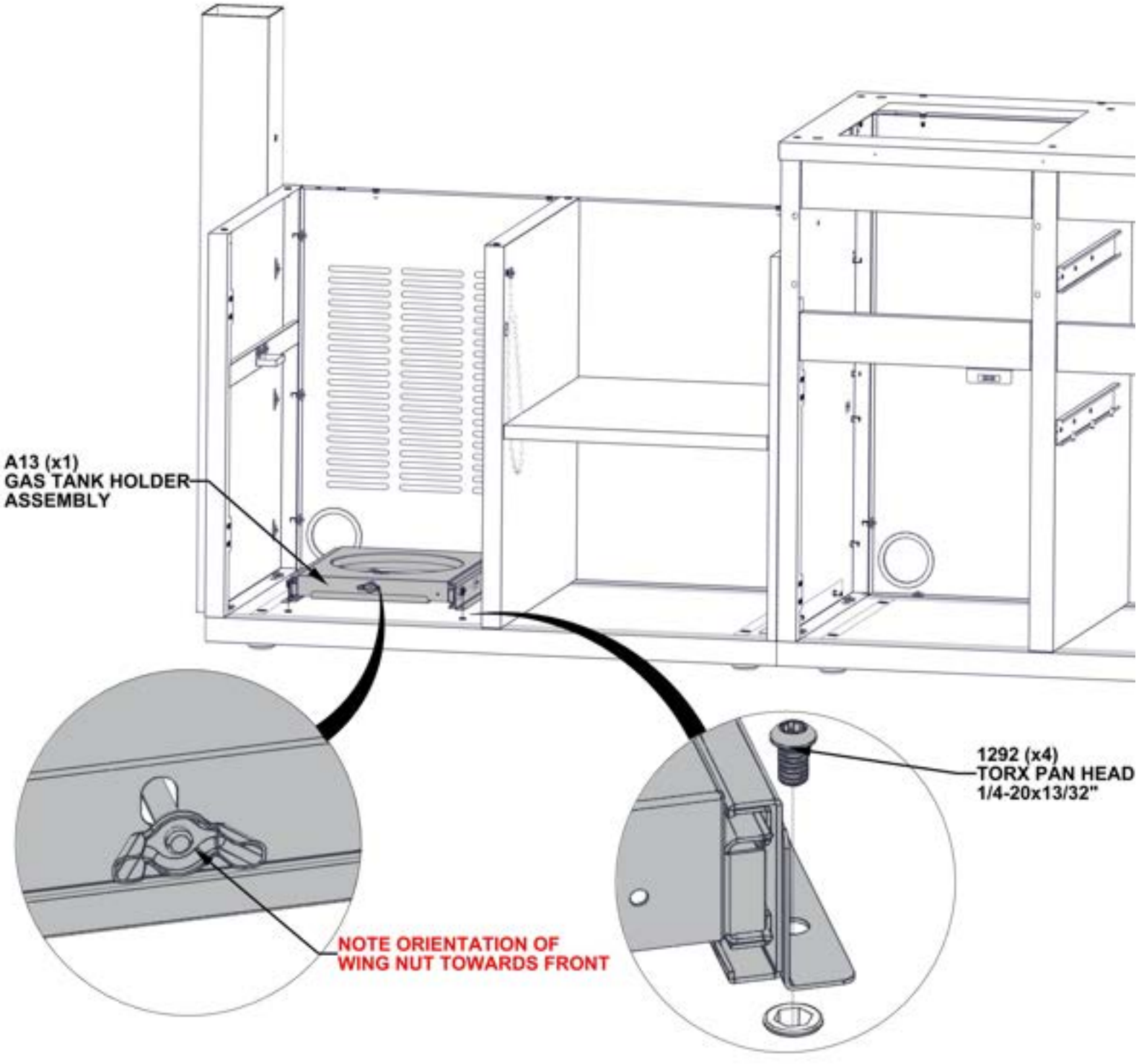

STEP 85 - PIZZA OVEN CABINET ASSEMBLY

Qty	PartNo	Description
4	H101289	PAN HEAD SCREW 8-32x1/2" SS



T1 PIZZA OVEN CABINET TABLETOP ASSEMBLY - A4M03543
(x1) 40 3/16"x23 3/8"x1 1/4" (32x594x1020)



A2 MAGNET BRACKET - A4M03026
(x2) 1"x1 1/4"x3 1/8" (25x31x80)

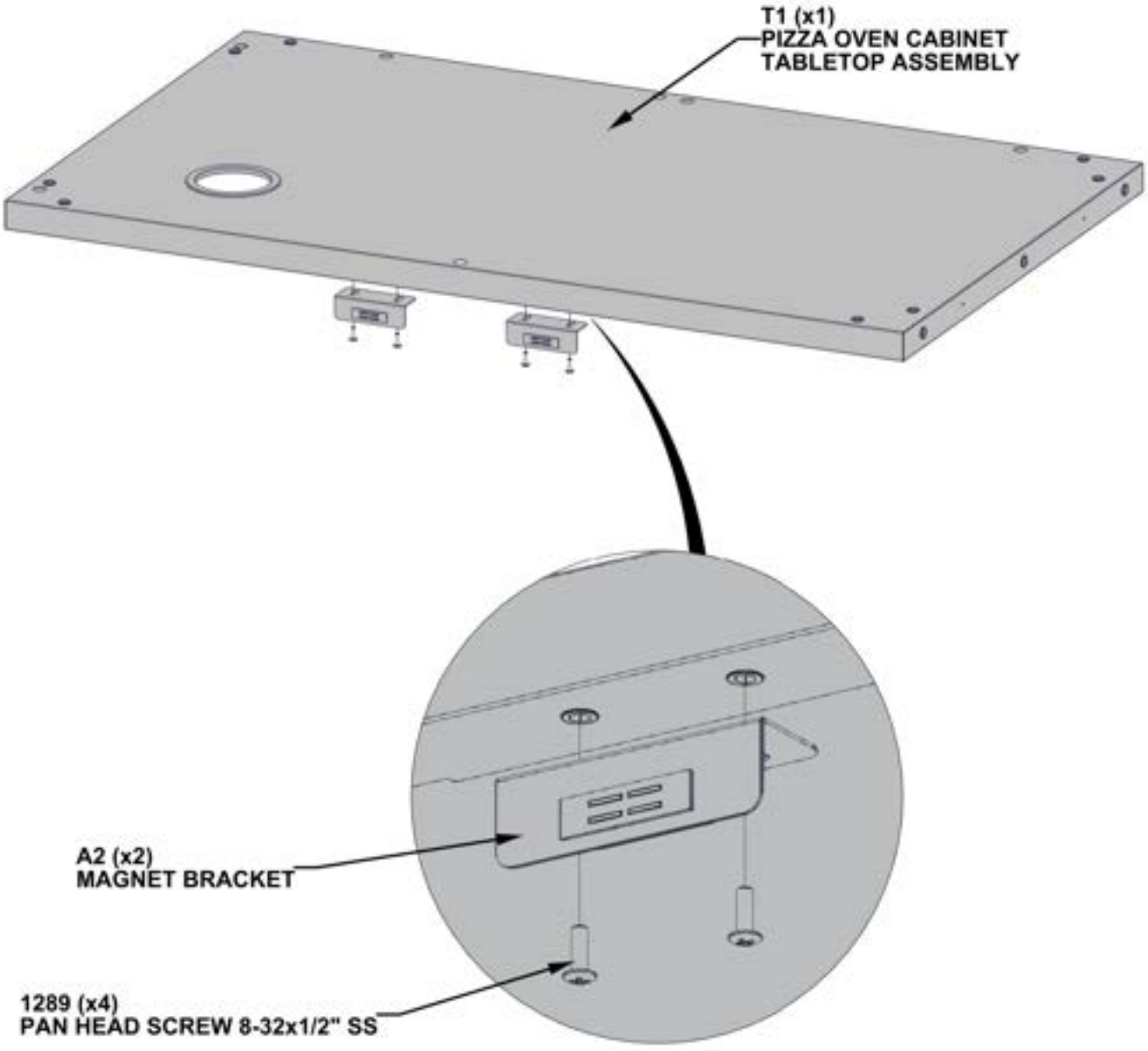

STEP 86A - PIZZA OVEN CABINET ASSEMBLY



PIZZA OVEN TABLETOP
ASSEMBLY FROM STEP 85

Qty	PartNo	Description
3	H101202	TORX PAN HEAD 1/4-20x3/4 ASSY

- ONLY KITCHEN CABINETS ARE SHOWN FOR DETAIL.
- HARDWARE ATTACHES ON INSIDE OF CABINET

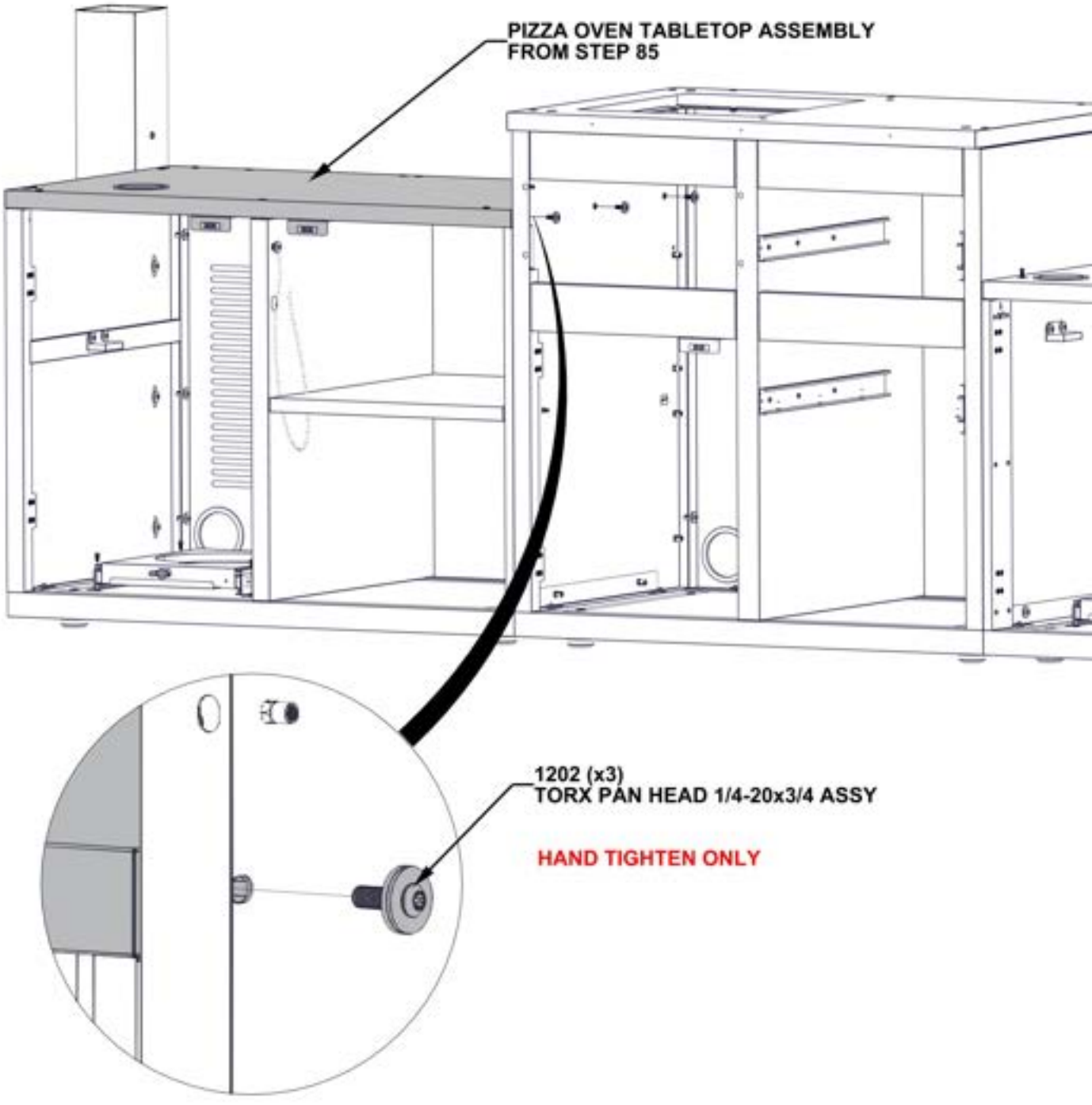

STEP 86B - PIZZA OVEN CABINET ASSEMBLY

Qty	PartNo	Description
7	H101103	TORX SOCKET SCREW 1/4-20

- ONLY KITCHEN CABINETS ARE SHOWN FOR DETAIL.

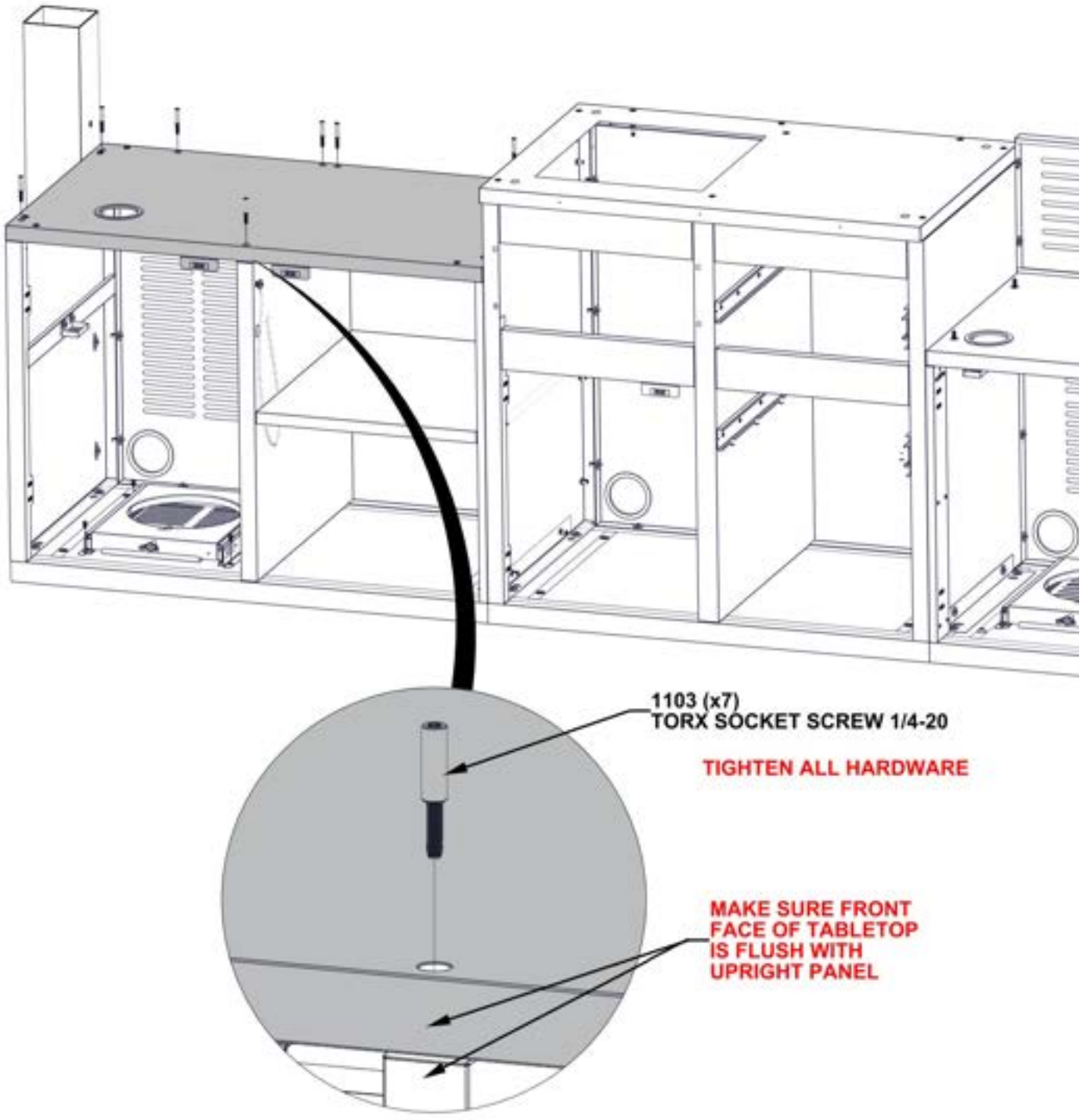

STEP 87 - PIZZA OVEN CABINET ASSEMBLY



Qty	PartNo	Description
5	H101202	TORX PAN HEAD 1/4-20x3/4 ASSY

T5 PIZZA OVEN CABINET MARBLE PANEL ASSEMBLY L - A4M03549
(x1) 24 1/8"x4 5/16"x6 3/4" (109x172.2x612)

- ONLY KITCHEN CABINETS ARE SHOWN FOR DETAIL.

1202 (x5)
TORX PAN HEAD 1/4-20x3/4 ASSY

SLOTS IN SIDE PANEL
WILL ALIGN WITH
THREADED INSERTS
IN BACK POST

FLUSH ALL
SIDES OF PANEL

T5 (x1)
PIZZA OVEN CABINET
MARBLE PANEL ASSEMBLY L

STEP 88 - PIZZA OVEN CABINET ASSEMBLY

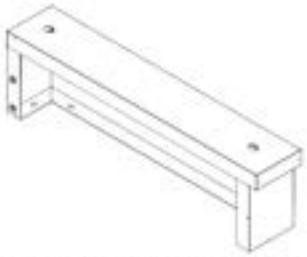

Qty	PartNo	Description
4	H101202	TORX PAN HEAD 1/4-20x3/4 ASSY

T3 PIZZA OVEN CABINET MARBLE PANEL ASSEMBLY R - A4M03551
(x1) 612x4 5/16"x6 3/4" (109x172.2x612)

- ONLY KITCHEN CABINETS ARE SHOWN FOR DETAIL.

STEP 89 - PIZZA OVEN CABINET ASSEMBLY



Qty	PartNo	Description
4	H101202	TORX PAN HEAD 1/4-20x3/4 ASSY

O8 PIZZA OVEN VENTILATION PANEL - A4M03078
(x1) 1 3/16"x3 3/4"x31 7/16" (30x95x798)

- ONLY KITCHEN CABINETS ARE SHOWN FOR DETAIL.

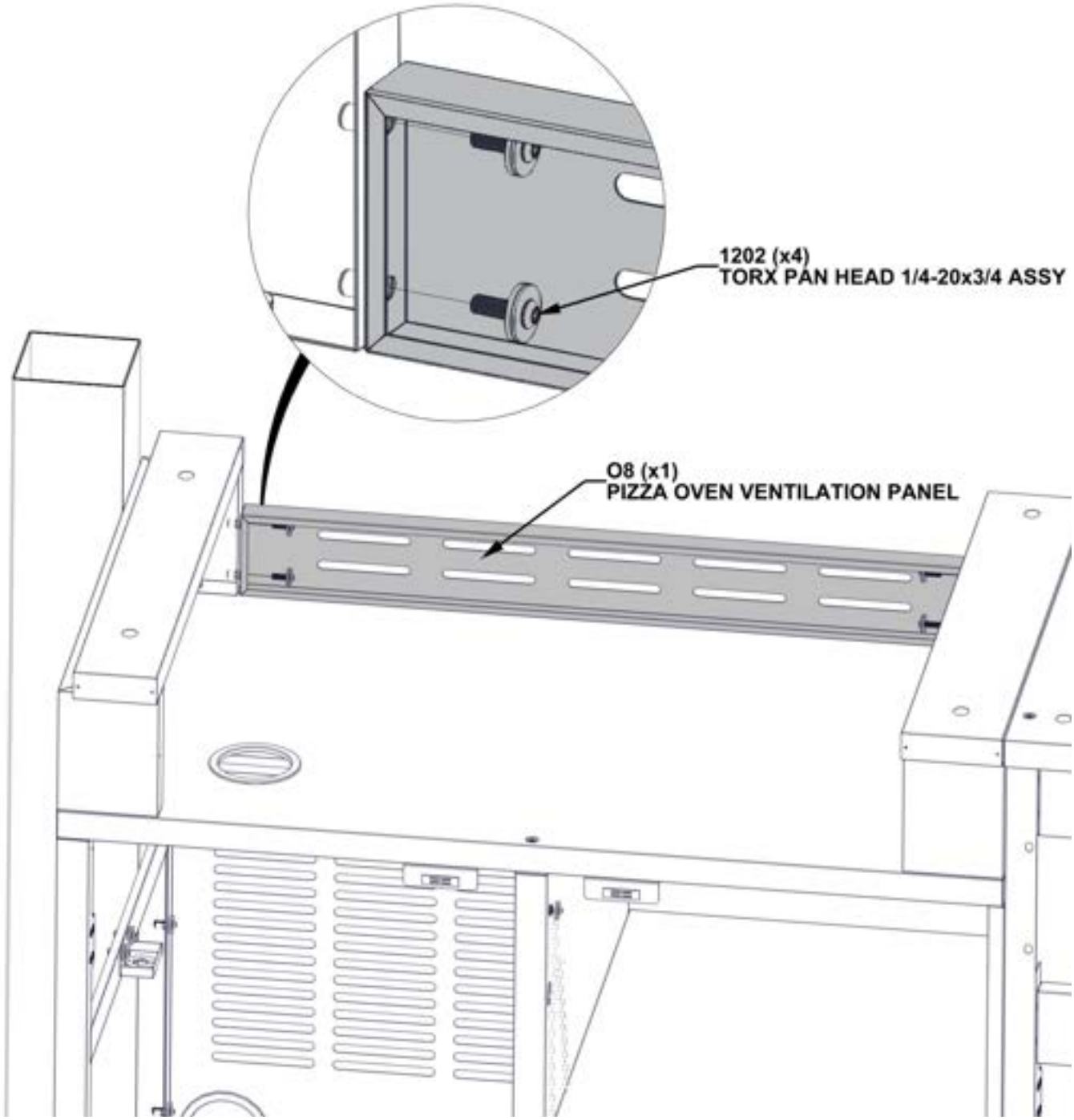

STEP 90 - SINK CABINET FALSE PANEL ASSEMBLY

Qty	PartNo	Description
2	H101289	PAN HEAD SCREW 8-32x1/2" SS

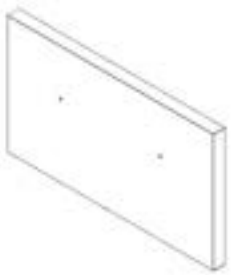

D5 SINK CABINET TRIM PANEL - A4M03576
(x1) 17 13/16"x10 1/4"x1" (26x260x452)



H2 STAINLESS STEEL HANDLE - A4M03024
(x1) 5/8"x1 9/16"x11 13/16" (16x40x300)

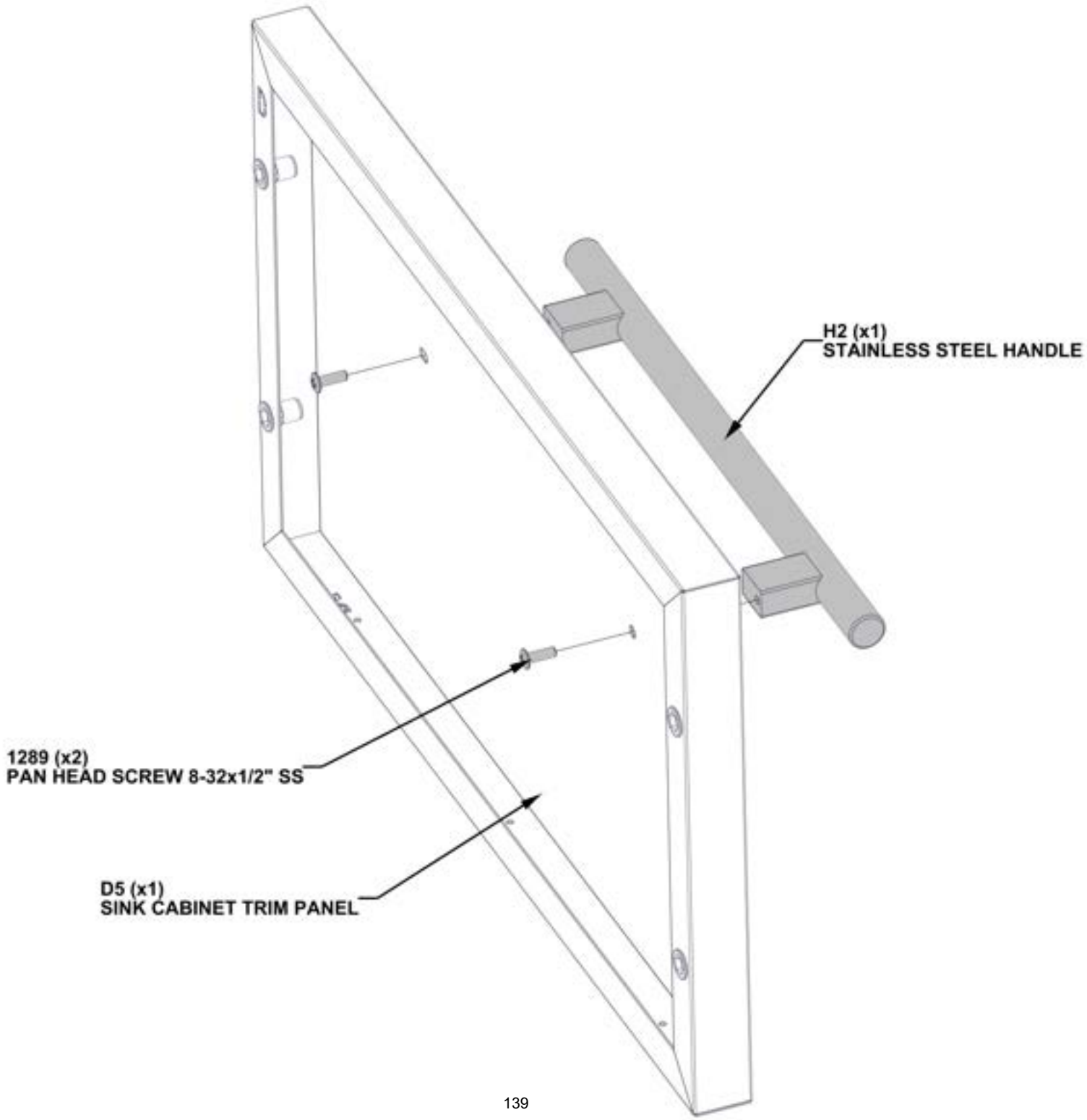

STEP 91 - SINK CABINET FALSE PANEL ATTACHMENT



FALSE PANEL ASSEMBLY
FROM STEP 90

Qty	PartNo	Description
4	H101202	TORX PAN HEAD 1/4-20x3/4 ASSY

- ONLY KITCHEN CABINETS ARE SHOWN FOR DETAIL.
- HARDWARE ATTACHES ON INSIDE OF CABINET.

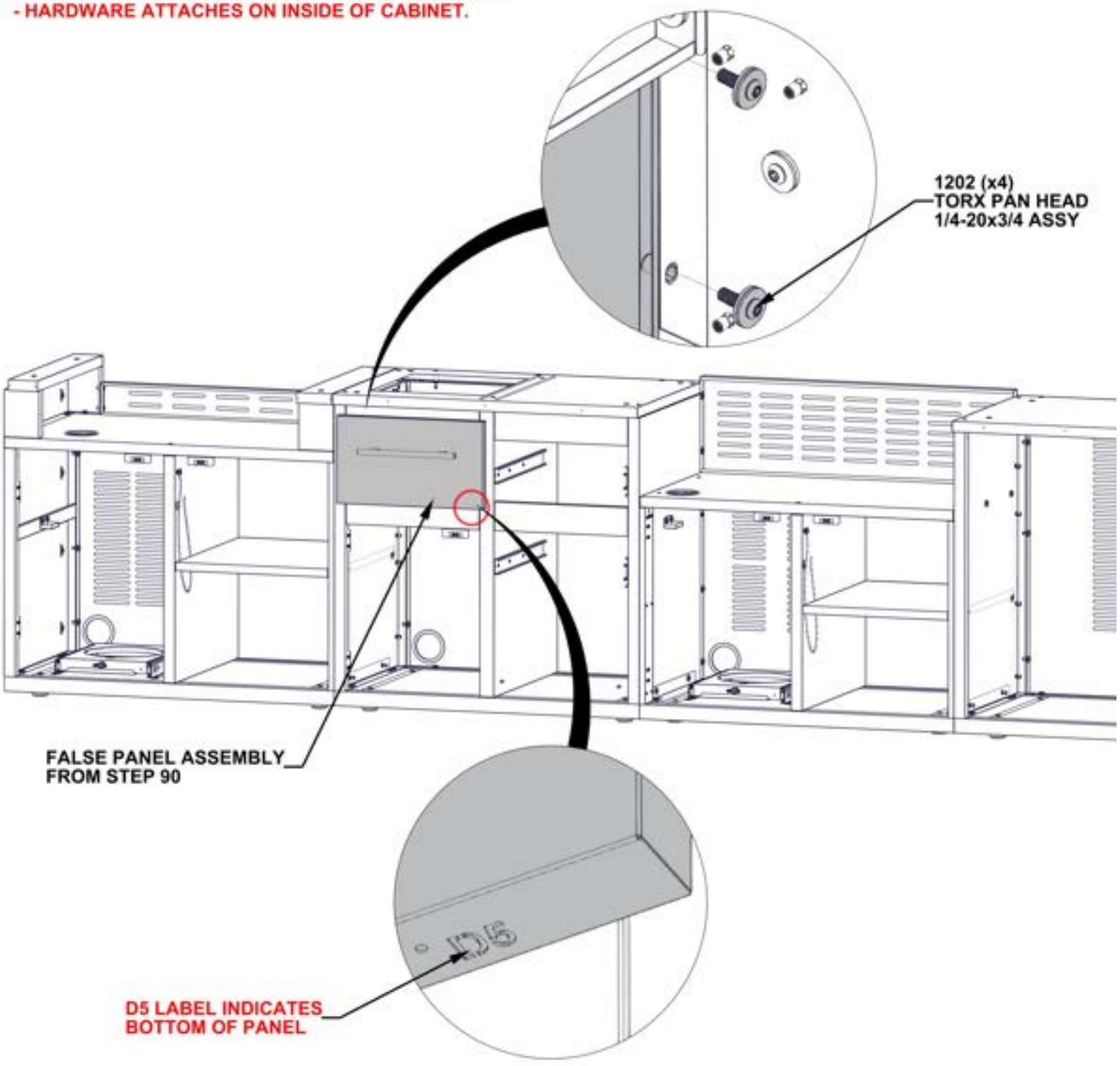

STEP 92A - SINK PRE-ASSEMBLY



A16 SINK ASSEMBLY - A4M03143
(x1) 15 1/8"x15 5/16"x16 7/8" (384x389x429)

---

1. INSTALLING THE SINK DRAIN

- SET DRAIN INSIDE OF SINK BODY, PLACING FOAM GASKET BETWEEN SURFACES.
- FASTEN IN PLACE USING RUBBER GASET AND DRAIN NUT FROM BOTTOM SIDE.

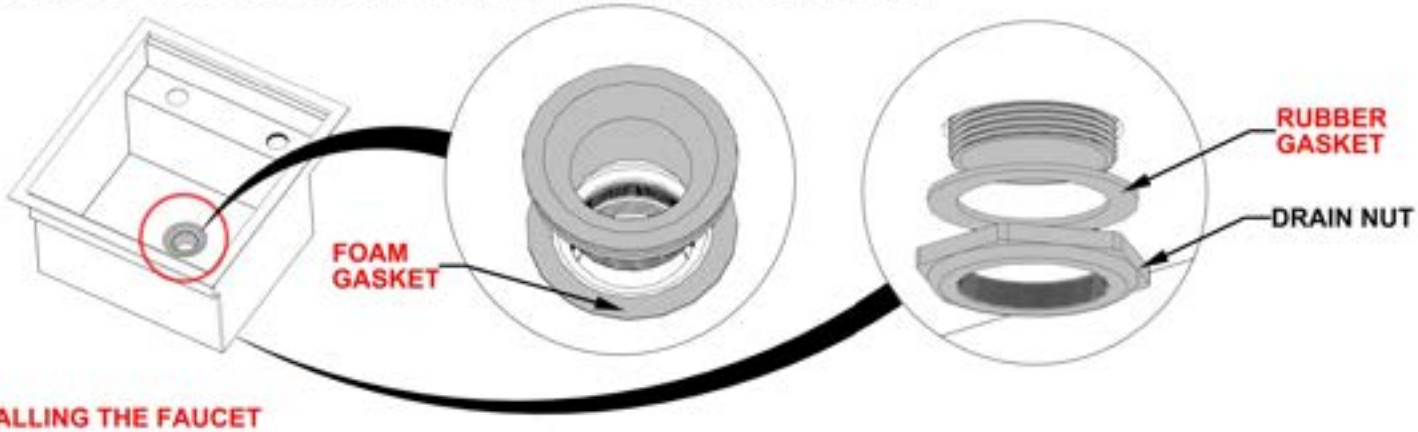

2. INSTALLING THE FAUCET

- INSTALL FAUCET BY PLACING HANDLE AND SPOUT INTO SINK OPENINGS AND SECURING IN PLACE VIA NUT.
- INSERT SCREWS TO LOCK.
- CONNECT WATER FAUCET LINES TOGETHER.

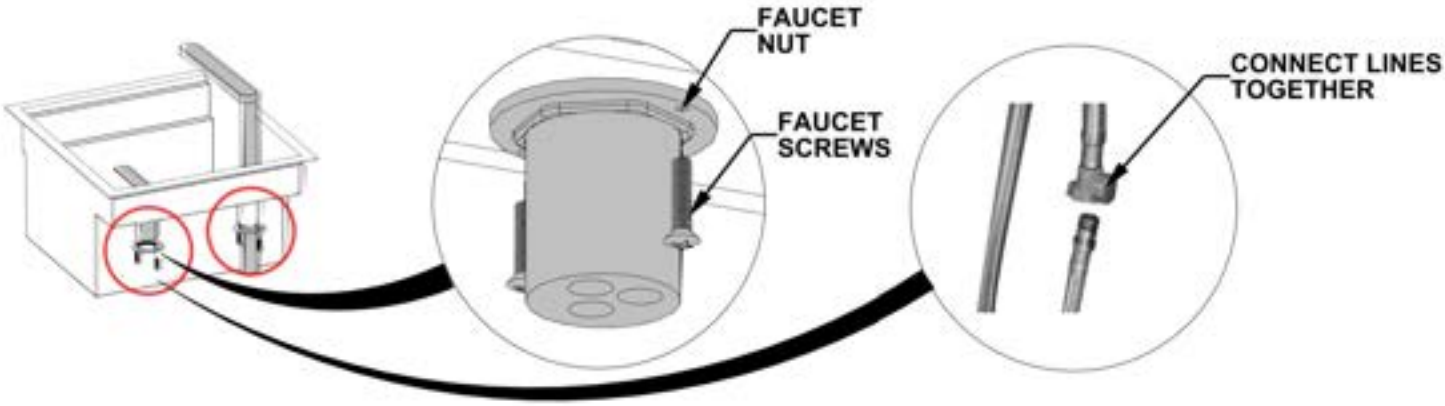

3. INSTALLING THE DRAIN FITTING

- ATTACH DRAIN FITTING TO SINK DRAIN.

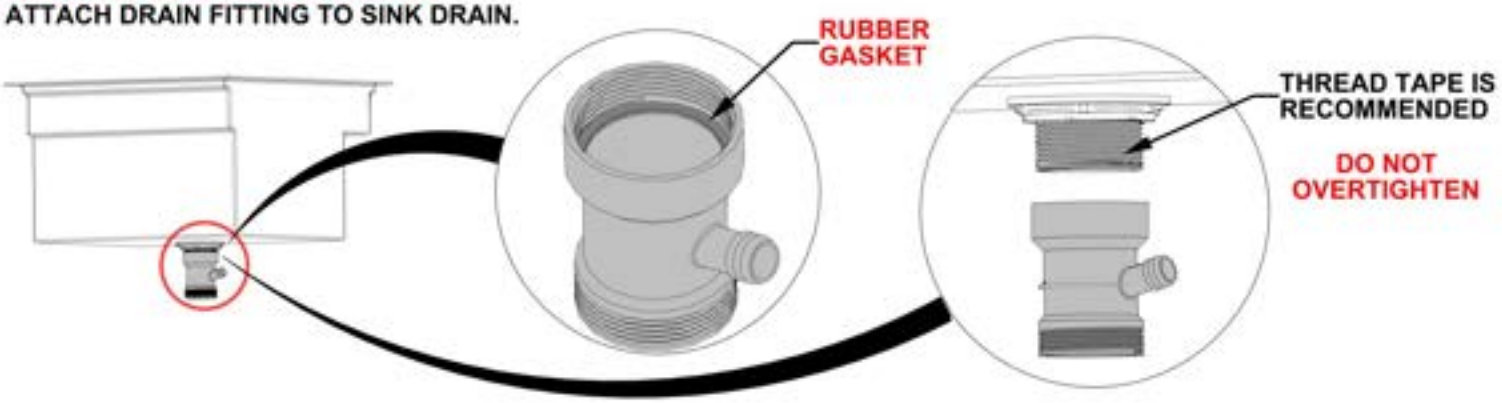

STEP 92B - SINK PRE-ASSEMBLY



A16 (x1) SINK ASSEMBLY - A4M03143
15 1/8"x15 5/16"x16 7/8" (384x389x429)

4. INSTALLING THE OVERFLOW DRAIN

- MAKE SURE RUBBER GASKET IS INSTALLED IN OVERFLOW DRAIN.
- INSERT DRAIN SCREW TO HOLD IN PLACE.

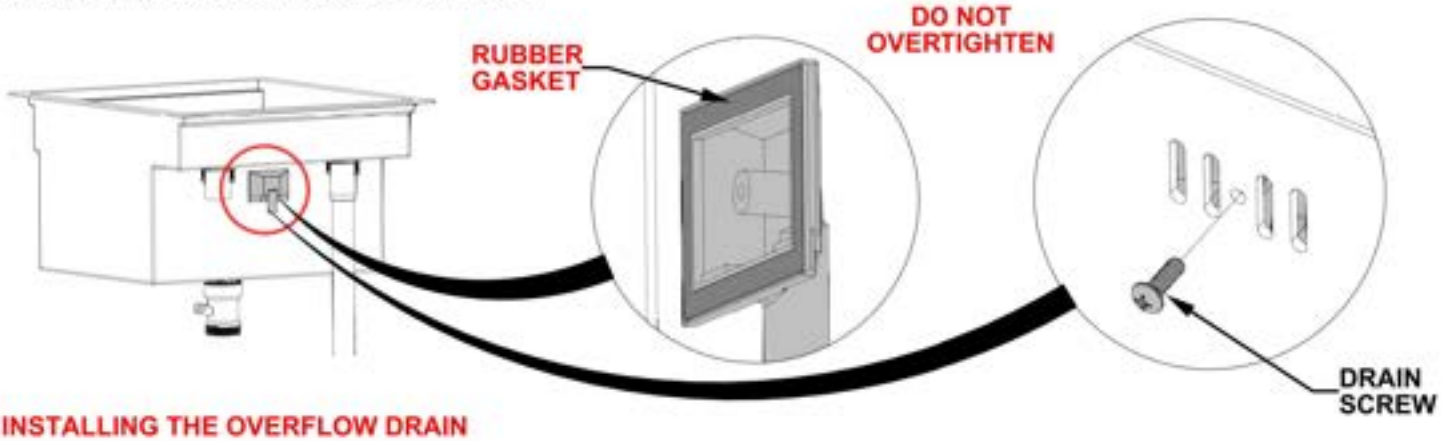

5. INSTALLING THE OVERFLOW DRAIN

- ATTACH OVERFLOW DRAIN BY CONNECTING EACH END AS SHOWN.

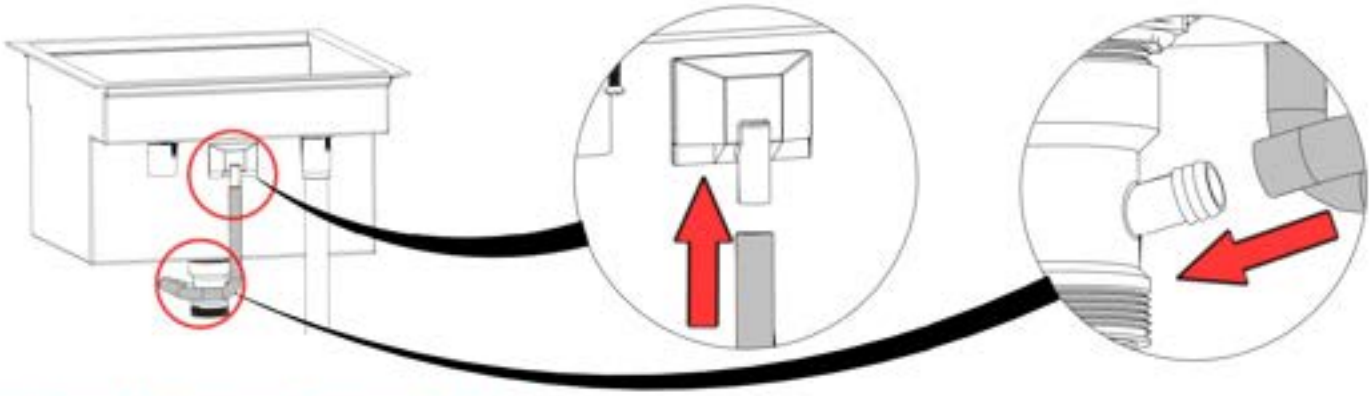

6. INSTALLING THE MAIN DRAIN AND TRAP

- ATTACH TRAP AND CORRUGATED DRAIN HOSE TO DRAIN FITTING.

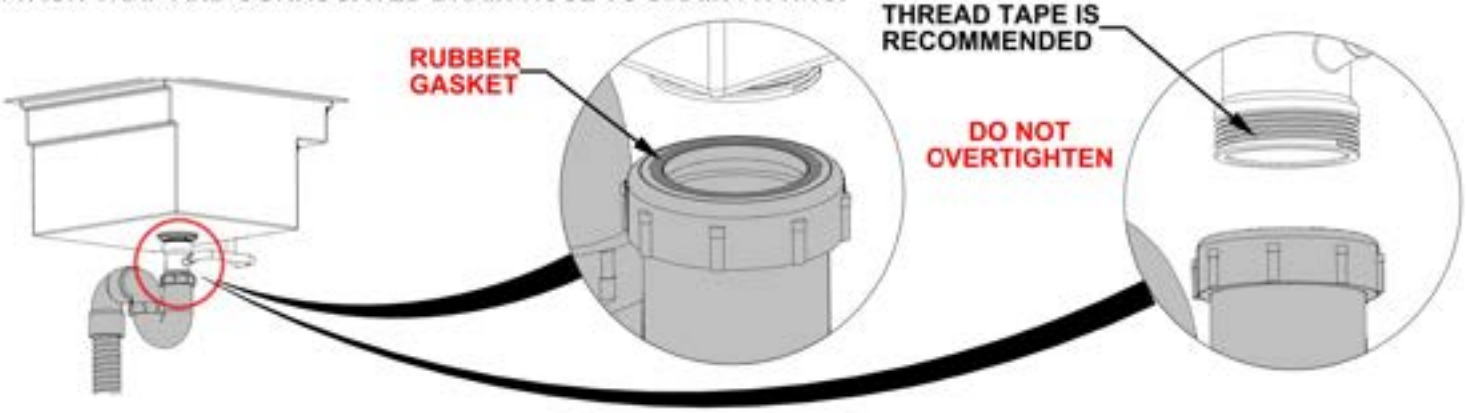

STEP 92C - SINK INSTALLATION



A16 (x1) SINK ASSEMBLY - A4M03143
15 1/8"x15 5/16"x16 7/8" (384x389x429)



A4M03151 (x1) GARDEN HOSE ADAPTER

- DRAIN STRAINER MUST BE USED WHEN DISCARDING FOOD INSIDE OF SINK.
- DO NOT LET SOLID MATERIAL ENTER SINK BASIN.

OPTIONS FOR WATER INLET SUPPLY HOOKUP:

- GARDEN HOSE ATTACHMENT USING PROVIDED ADAPTER
- WATER INLET SUPPLY LINE

OPTIONS FOR DRAIN DISCHARGE:

- BUCKET OR GREY WATER CONTAINER
- FRENCH DRAIN OR DRY BASIN
- INTEGRATED SEWER SYSTEM
- CHECK YOUR LOCAL REQUIRMENTS.

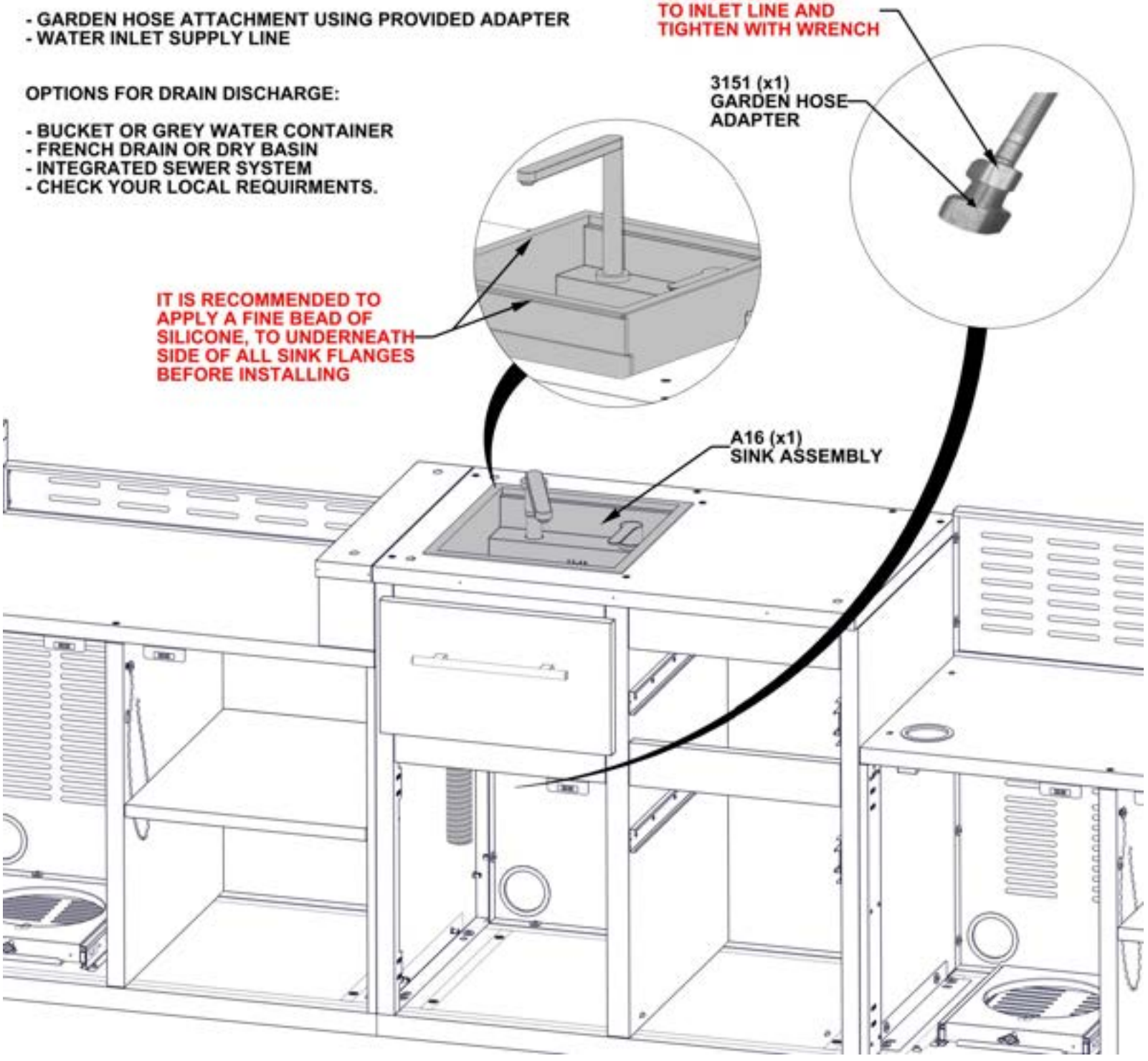

STEP 93A - FRIDGE CABINET MARBLE INSTALLATION

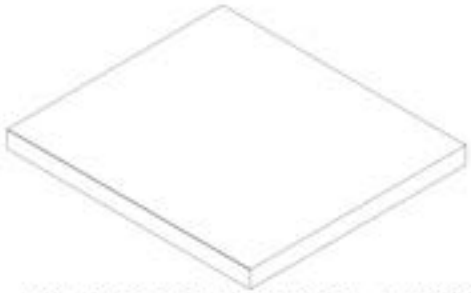

M3 FRIDGE CABINET MARBLE - A4M03602
(x1) 28 1/8"x24 15/16"x1 15/16" (50x634x715)

- ONLY KITCHEN CABINETS ARE SHOWN FOR DETAIL.
- IT IS RECOMMENDED TO HAVE AT LEAST TWO PEOPLE SET MARBLE COUNTERTOP IN PLACE.
- SLIDE IN PLACE UNTIL MARBLE IS TIGHT AGAINST POST AND SIDES ARE FLUSH WITH PANEL.
- WHEN SETTING MARBLE IN PLACE, MAKE SURE YOUR FINGERS ARE CLEAR AND NOT UNDERNEATH MARBLE.

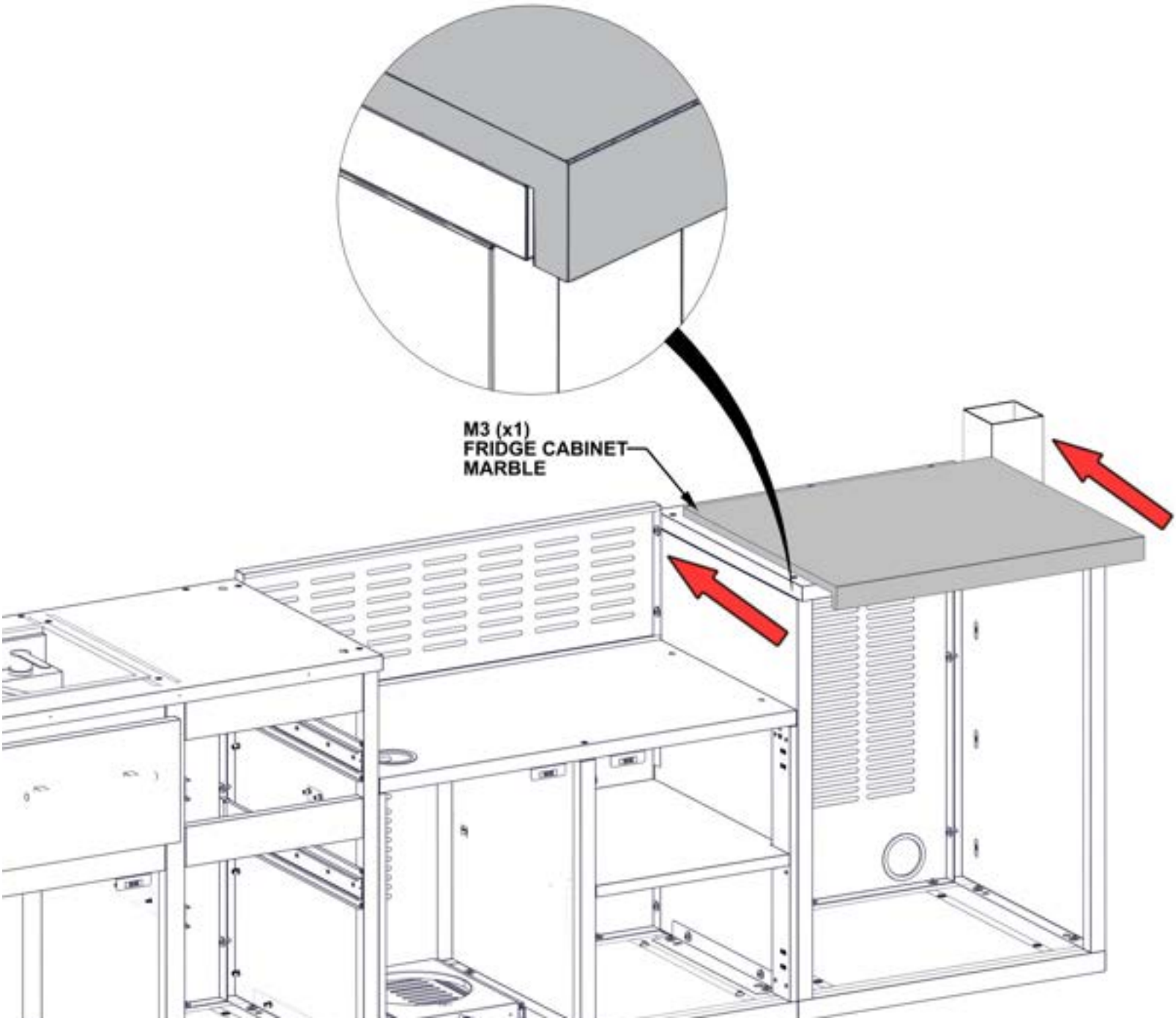

STEP 93B - FRIDGE CABINET MARBLE INSTALLATION

Qty	PartNo	Description
4	H101292	TORX PAN HEAD 1/4-20x13/32"
4	H101053	STEEL WASHER 6x20
4	H101054	SEALANT WASHER

- ONLY KITCHEN CABINETS ARE SHOWN FOR DETAIL.
- MAKE SURE YOU ARE USING THE CORRECT HARDWARE FOR THIS STEP.
- ONCE MARBLE IS IN PLACE, IT IS RECOMMENDED TO COVER WITH A PIECE OF CARDBOARD OR FOAM UNTIL ASSEMBLY IS FINISHED TO PREVENT DAMAGE.
- DO NOT USE MARBLE SURFACE AS A WORK BENCH.

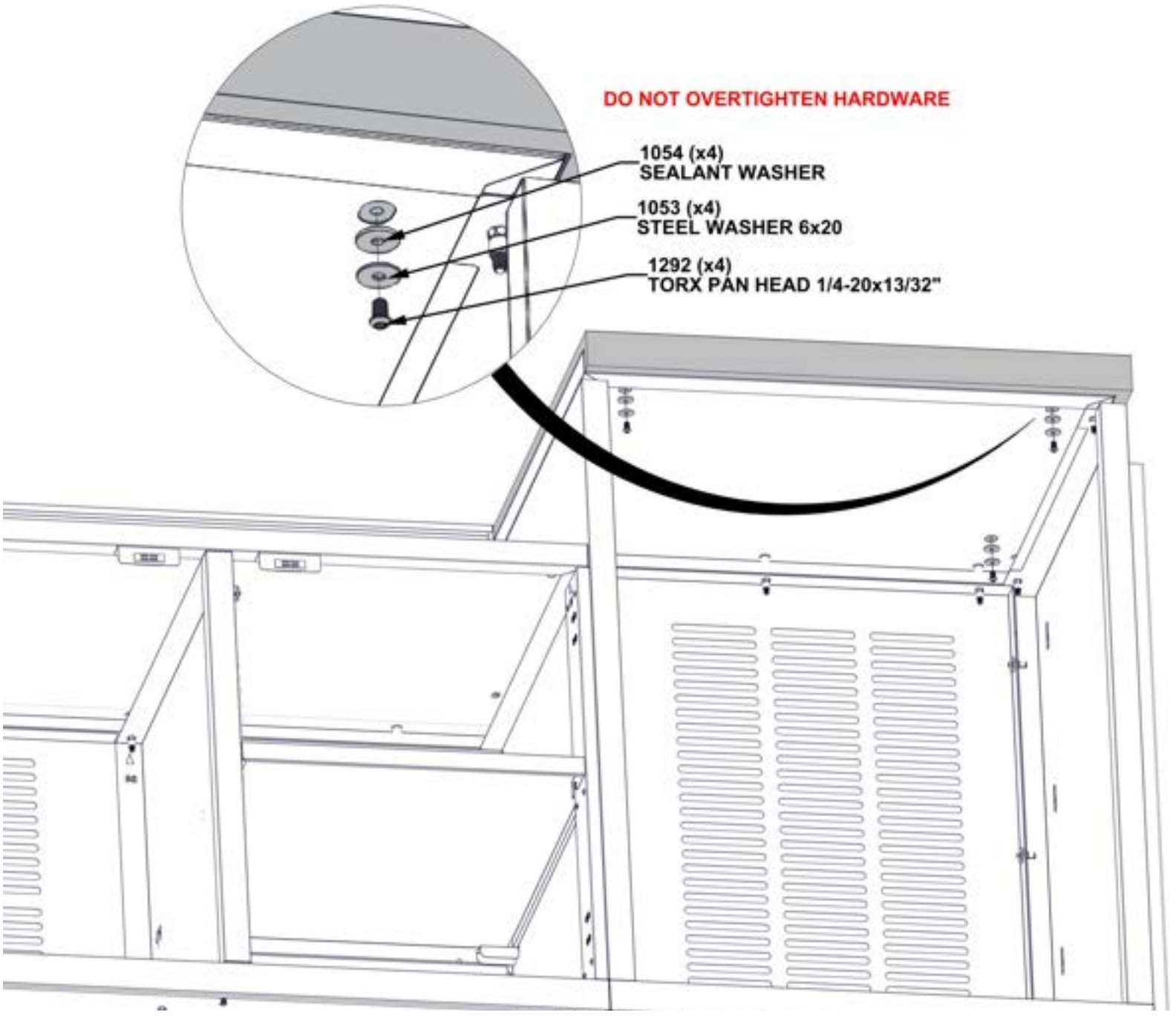

STEP 94A - SINK CABINET MARBLE INSTALLATION



M2 SINK CABINET MARBLE - A4M03568
(x1) 41 1/2"x24 15/16"x1 15/16" (49x633x1054)

- ONLY KITCHEN CABINETS ARE SHOWN FOR DETAIL.
- IT IS RECOMMENDED TO HAVE AT LEAST TWO PEOPLE SET MARBLE COUNTERTOP IN PLACE.
- SLIDE IN PLACE UNTIL MARBLE IS TIGHT AGAINST POST AND SIDES ARE FLUSH WITH PANEL.
- WHEN SETTING MARBLE IN PLACE, MAKE SURE YOUR FINGERS ARE CLEAR AND NOT UNDERNEATH MARBLE.

STEP 94B - SINK CABINET MARBLE INSTALLATION

Qty	PartNo	Description
4	H101292	TORX PAN HEAD 1/4-20x13/32"
4	H101053	STEEL WASHER 6x20
4	H101054	SEALANT WASHER

- ONLY KITCHEN CABINETS ARE SHOWN FOR DETAIL.
- MAKE SURE YOU ARE USING THE CORRECT HARDWARE FOR THIS STEP.
- ONCE MARBLE IS IN PLACE, IT IS RECOMMENDED TO COVER WITH A PIECE OF CARDBOARD OR FOAM UNTIL ASSEMBLY IS FINISHED TO PREVENT DAMAGE.
- DO NOT USE MARBLE SURFACE AS A WORK BENCH.

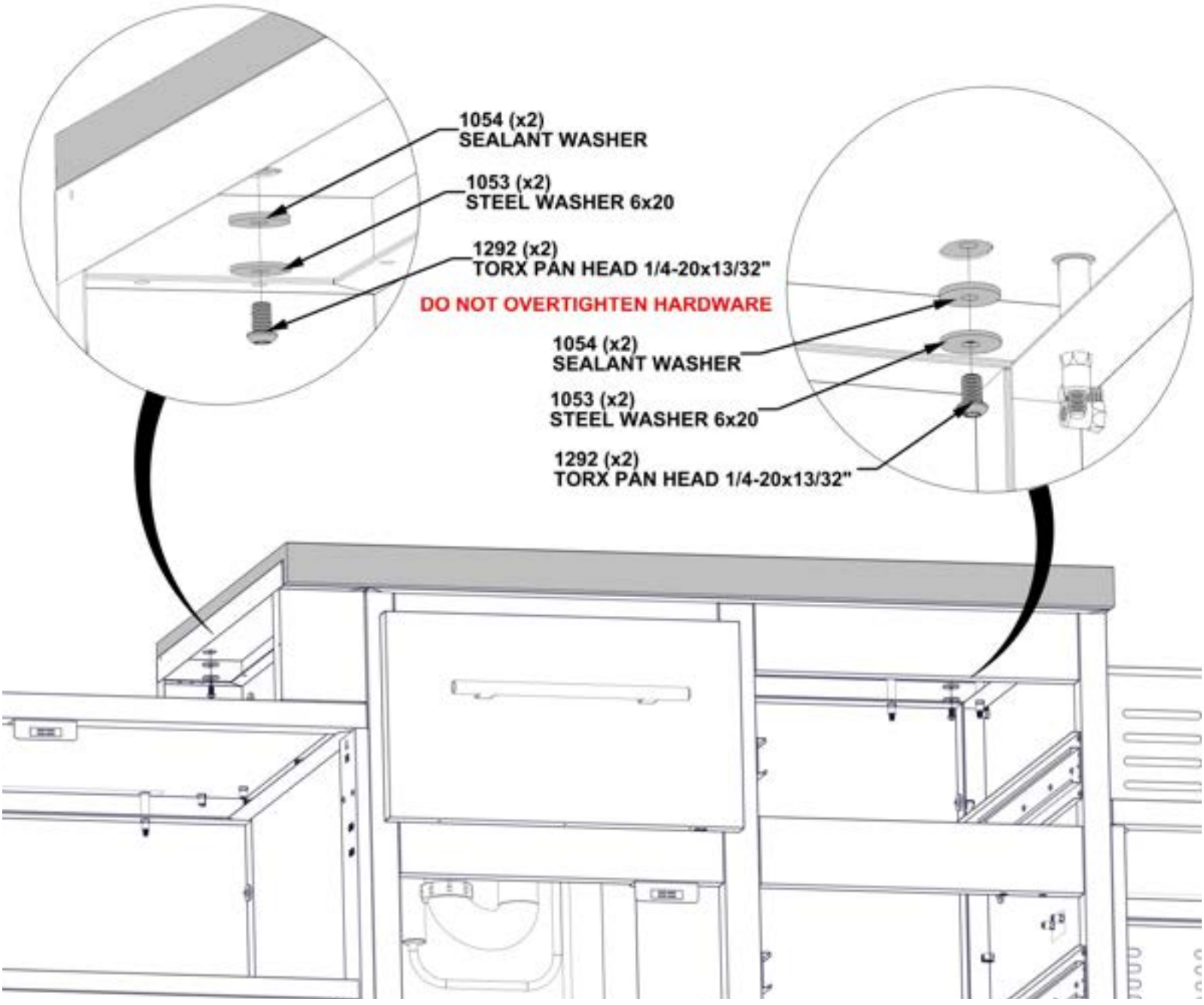

STEP 95 - SINK CABINET MARBLE INSTALLATION

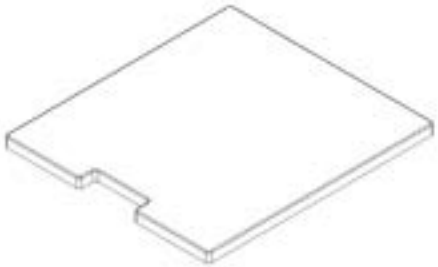

M5 SINK COVER MARBLE - A4M03147
(x1) 11/16"x14 3/4"x16 5/16" (18x375x415)

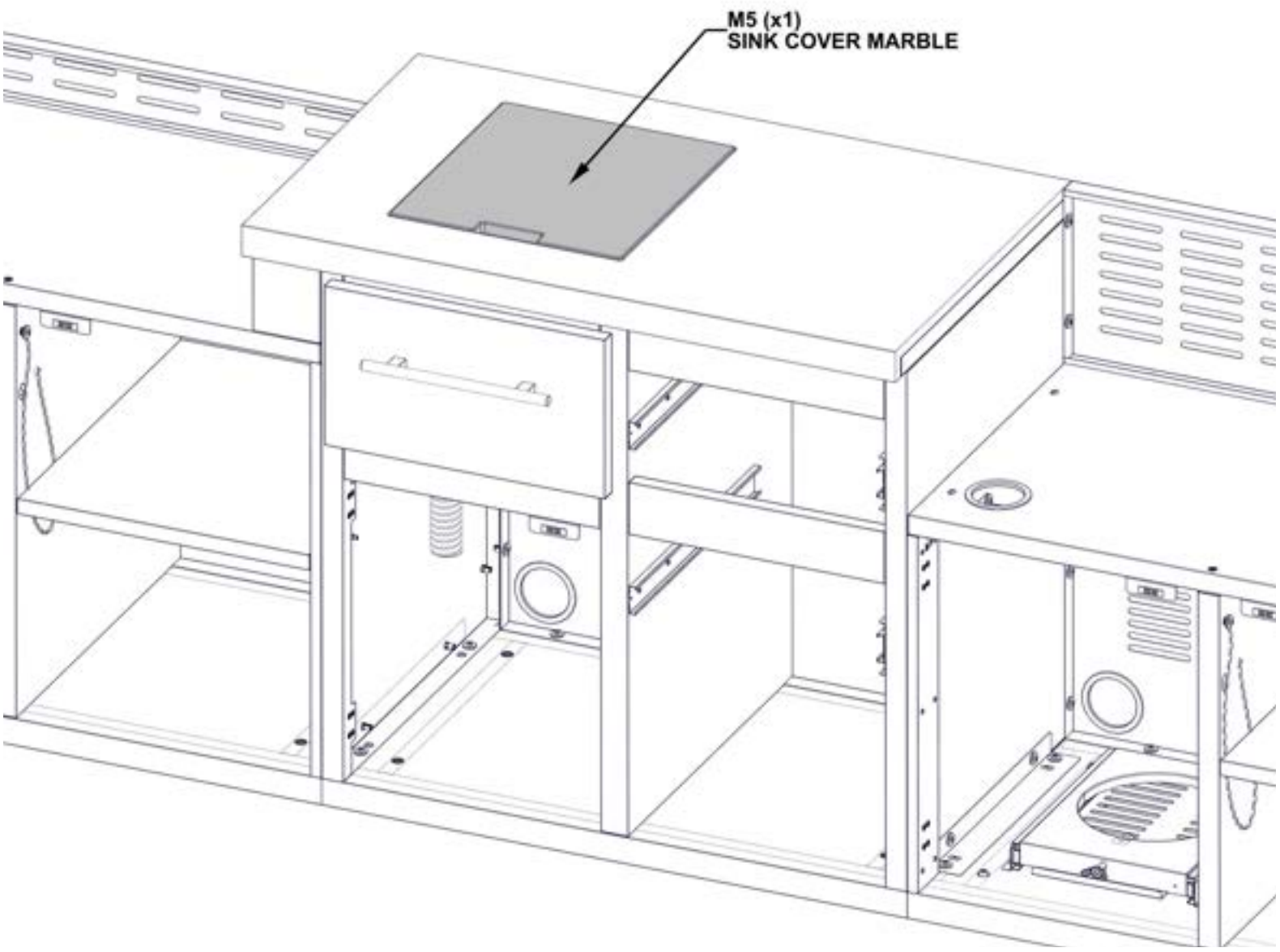

STEP 96A - PIZZA OVEN CABINET MARBLE INSTALLATION



M1 PIZZA OVEN CABINET MARBLE - A4M03553
(x1) 24 13/16"x4 5/16"x1 15/16" (50x109x630)

- ONLY KITCHEN CABINETS ARE SHOWN FOR DETAIL.
- IT IS RECOMMENDED TO HAVE AT LEAST TWO PEOPLE SET MARBLE COUNTERTOP IN PLACE.
- SLIDE IN PLACE UNTIL MARBLE IS TIGHT AGAINST POST AND SIDES ARE FLUSH WITH PANEL.
- WHEN SETTING MARBLE IN PLACE, MAKE SURE YOUR FINGERS ARE CLEAR AND NOT UNDERNEATH MARBLE.

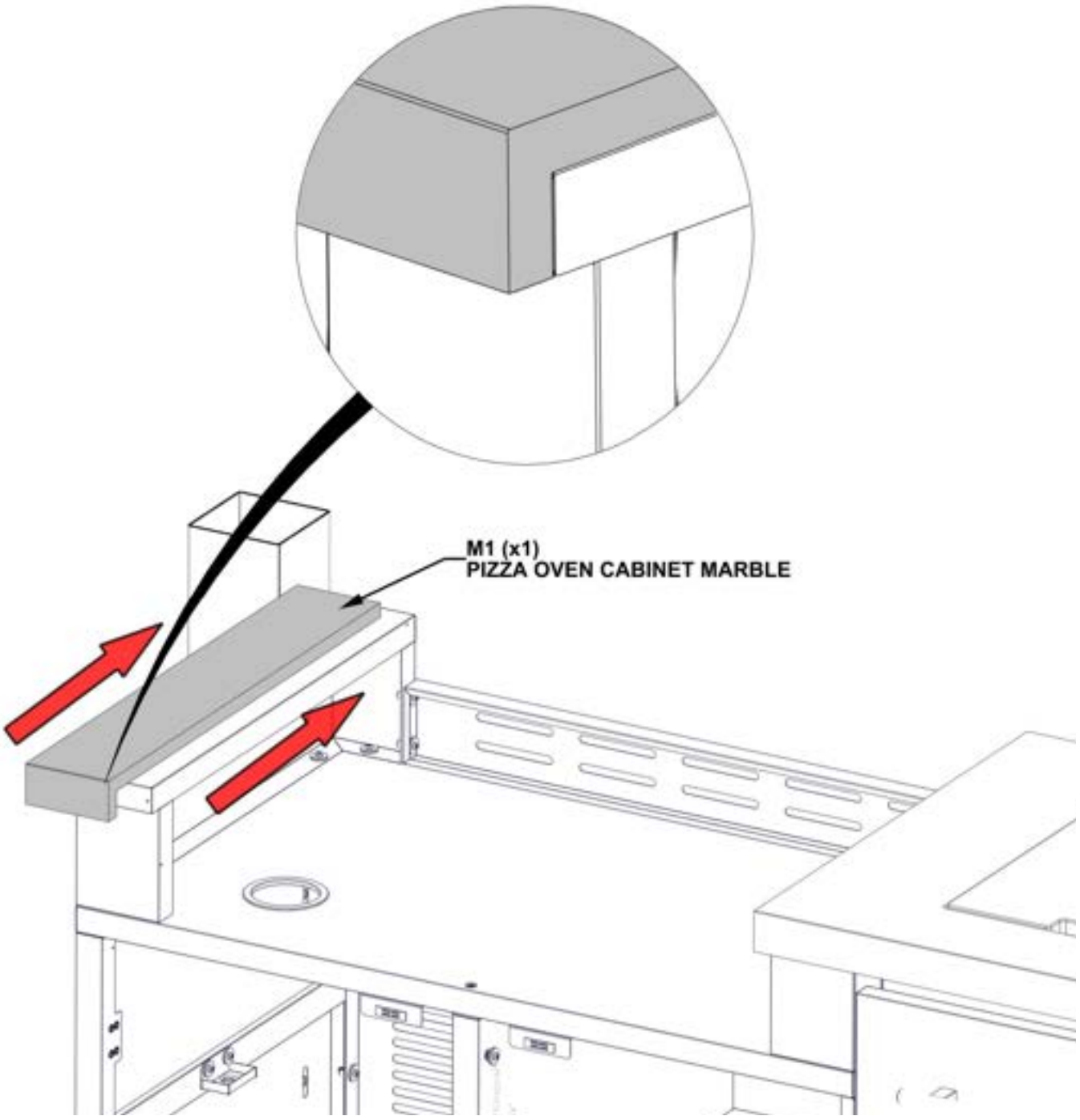

STEP 96B - SINK CABINET MARBLE INSTALLATION

Qty	PartNo	Description
2	H101292	TORX PAN HEAD 1/4-20x13/32"
2	H101053	STEEL WASHER 6x20
2	H101054	SEALANT WASHER

- ONLY KITCHEN CABINETS ARE SHOWN FOR DETAIL.
- MAKE SURE YOU ARE USING THE CORRECT HARDWARE FOR THIS STEP.
- ONCE MARBLE IS IN PLACE, IT IS RECOMMENDED TO COVER WITH A PIECE OF CARDBOARD OR FOAM UNTIL ASSEMBLY IS FINISHED TO PREVENT DAMAGE.
- DO NOT USE MARBLE SURFACE AS A WORK BENCH.

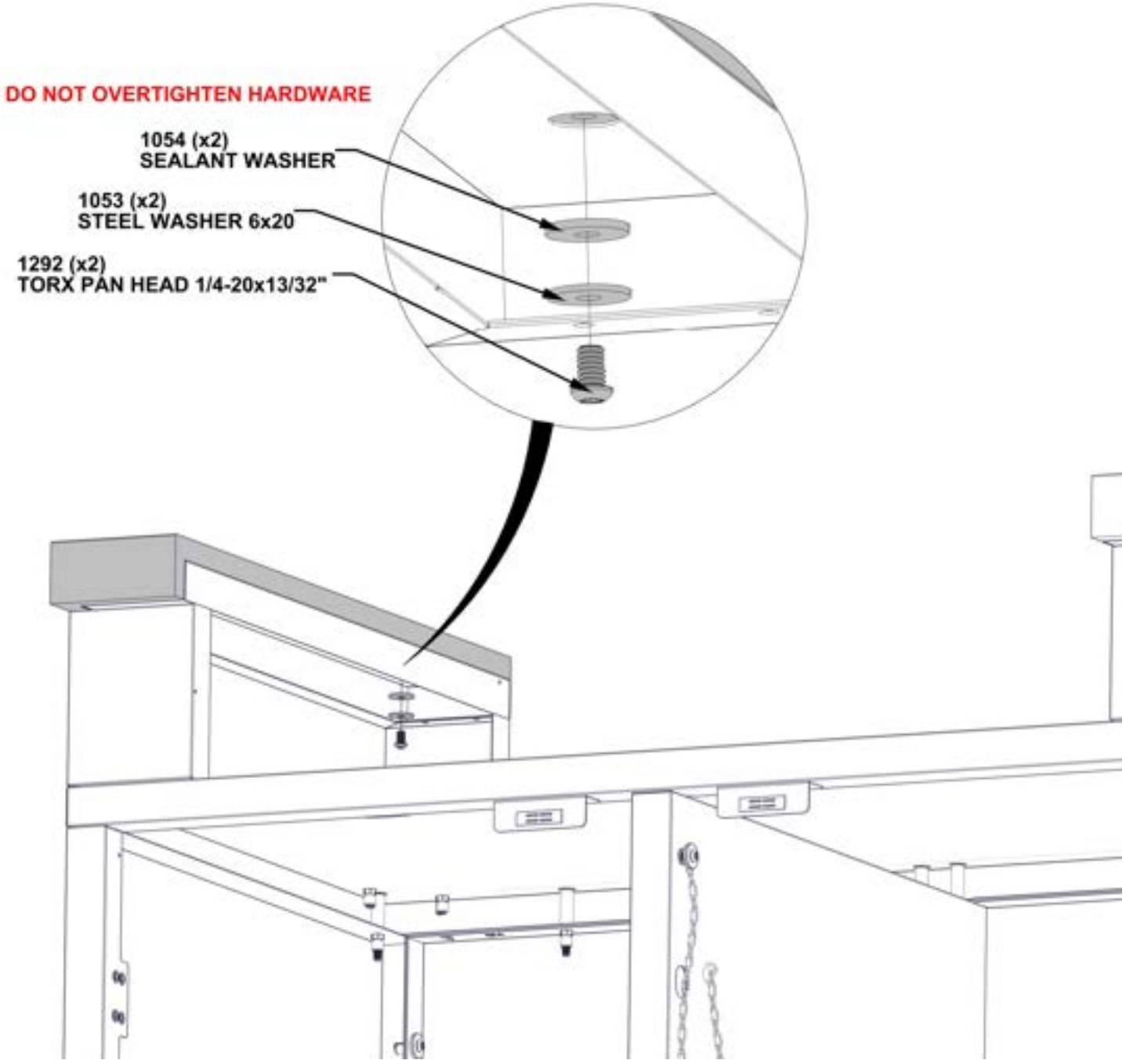

STEP 97A - KITCHEN TRASH CAN ASSEMBLY

Qty	PartNo	Description
6	H101289	PAN HEAD SCREW 8-32x1/2" SS



H3 TRASH CAN BRACKET ASSEMBLY - A4M03610
(x1) 18 1/16"x15 13/16"x (35x401.60x458)



A11 TRIANGLE PANEL - A4M03086
(x2) 13/16"x13 3/4"x13 3/4" (20x350x350)

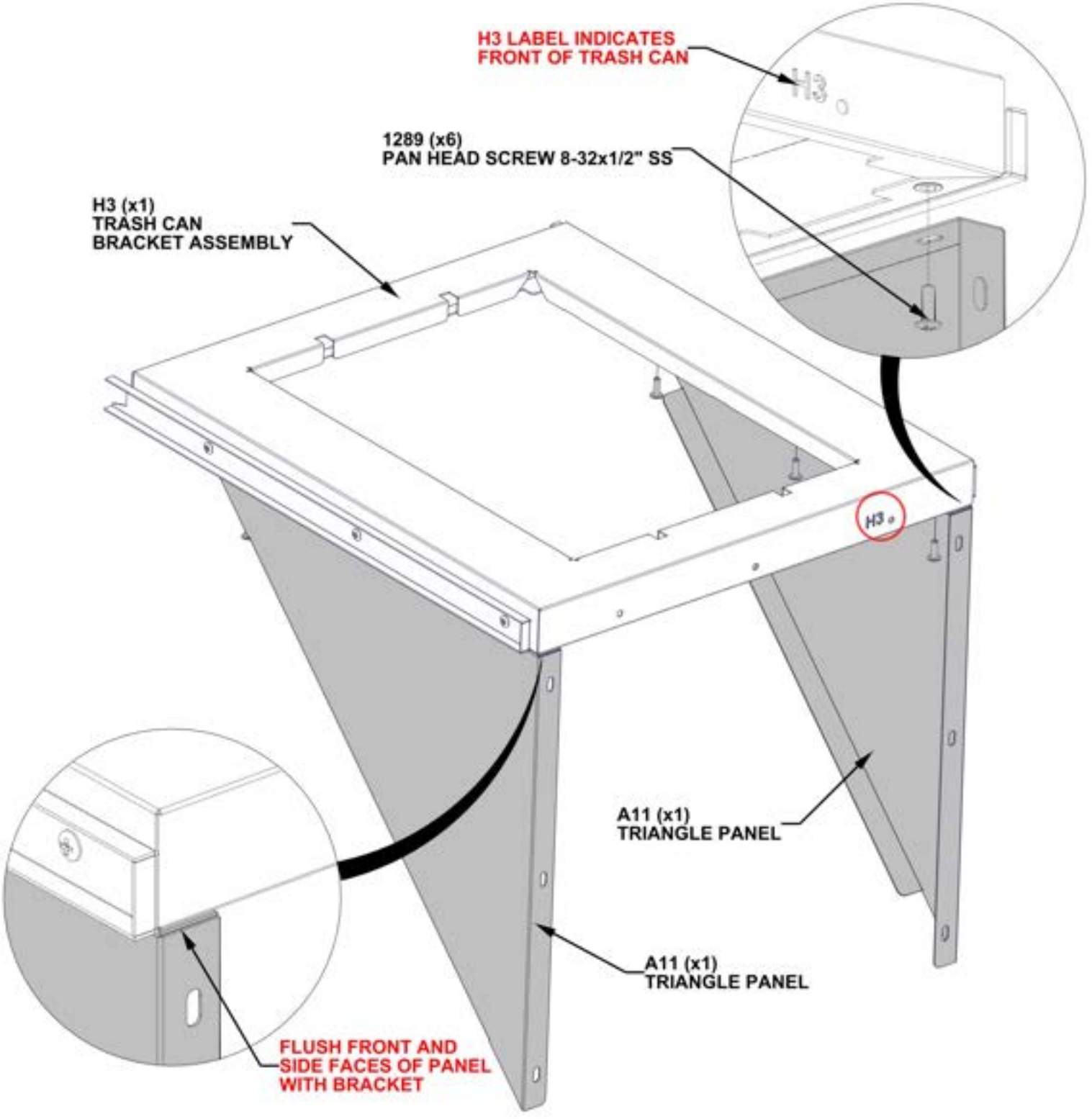

STEP 97B - KITCHEN TRASH CAN ASSEMBLY



D9 TRASH CAN PANEL ASSEMBLY - A4M03608
(x1) 22 1/4"x17 3/4"x15/16" (24.00x451.00x565.00)

Qty	PartNo	Description
9	H101289	PAN HEAD SCREW 8-32x1/2" SS

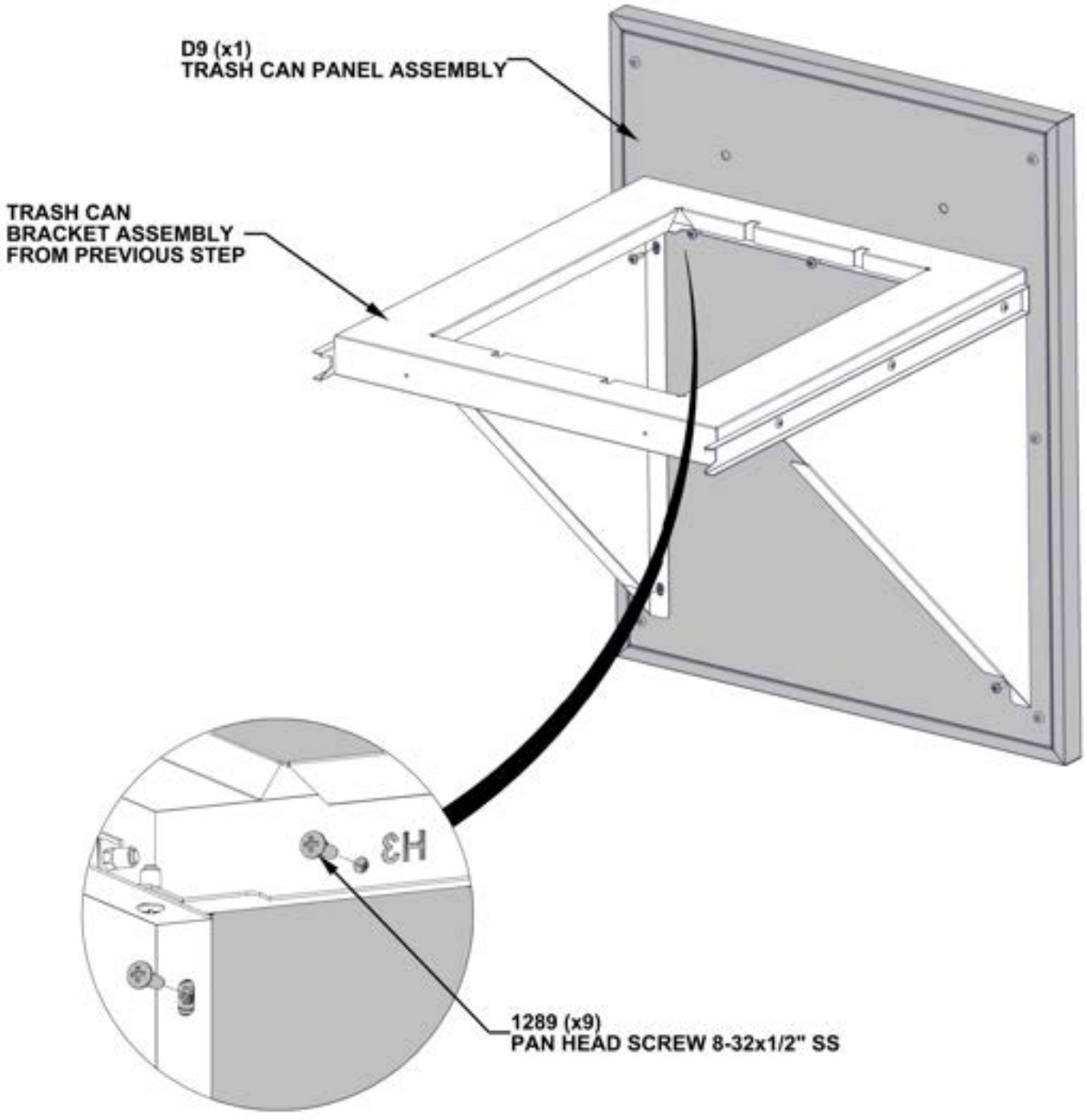

STEP 97C - KITCHEN TRASH CAN ASSEMBLY



H2 STAINLESS STEEL HANDLE - A4M03024
(x1) 5/8"x1 9/16"x11 13/16" (16x40x300)

Qty	PartNo	Description
2	H101307	SHOULDER BOLT 8-32x30mm SS

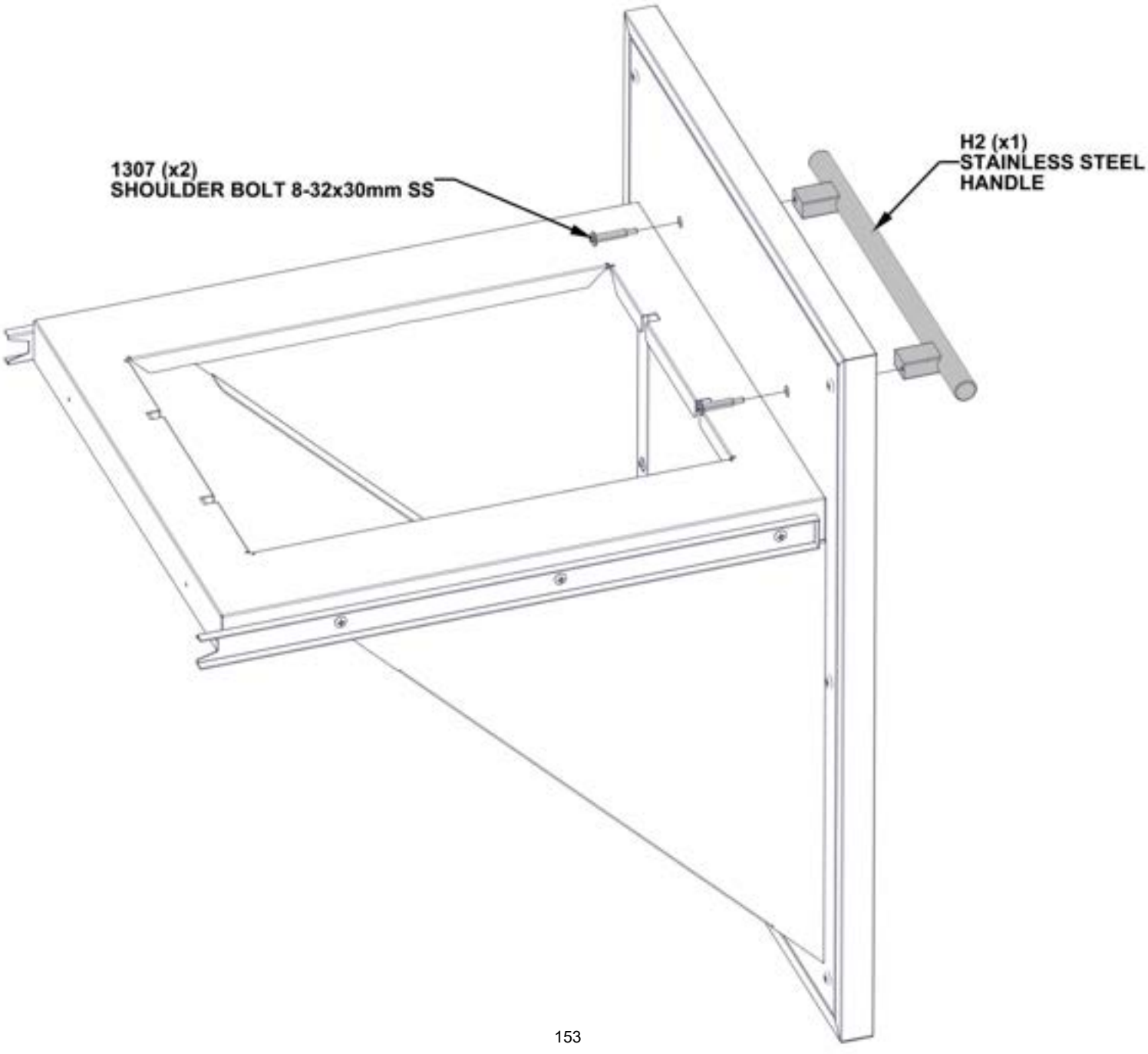

STEP 98 - KITCHEN TRASH CAN INSTALLATION



TRASH CANL ASSEMBLY
FROM STEP 97

- ONLY KITCHEN CABINETS ARE SHOWN FOR DETAIL.
- ATTACH TRASH CAN ASSEMBLY BY ALIGNING BOTH ENDS OF FACTORY ASSEMBLED DRAWER SLIDES WITH ONE ANOTHER.
- PRESS TOGETHER UNTIL DRAWER SLIDES CONNECT.

TRASH CAN
ASSEMBLY

ALIGN DRAWER SLIDES
ON BOTH IDES OF TRASH
CAN HOLDER

SLIDE INNER RACE
OF DRAWER SLIDE OUT
BEFORE ATTACHING SLIDES

STEP 99A - KITCHEN DRAWER ASSEMBLY

Qty	PartNo	Description
9	H101289	PAN HEAD SCREW 8-32x1/2" SS



D4 SINK CABINET DRAWER BODY ASSEMBLY - A4M03571
(x1) 22 1/4"x16 1/16"x6 7/16" (164.2x408.4x565.4)



D3 SINK CABINET DRAWER PANEL ASSEMBLY - A4M03569
(x1) 17 3/4"x10 1/4"x15/16" (24x260x451)

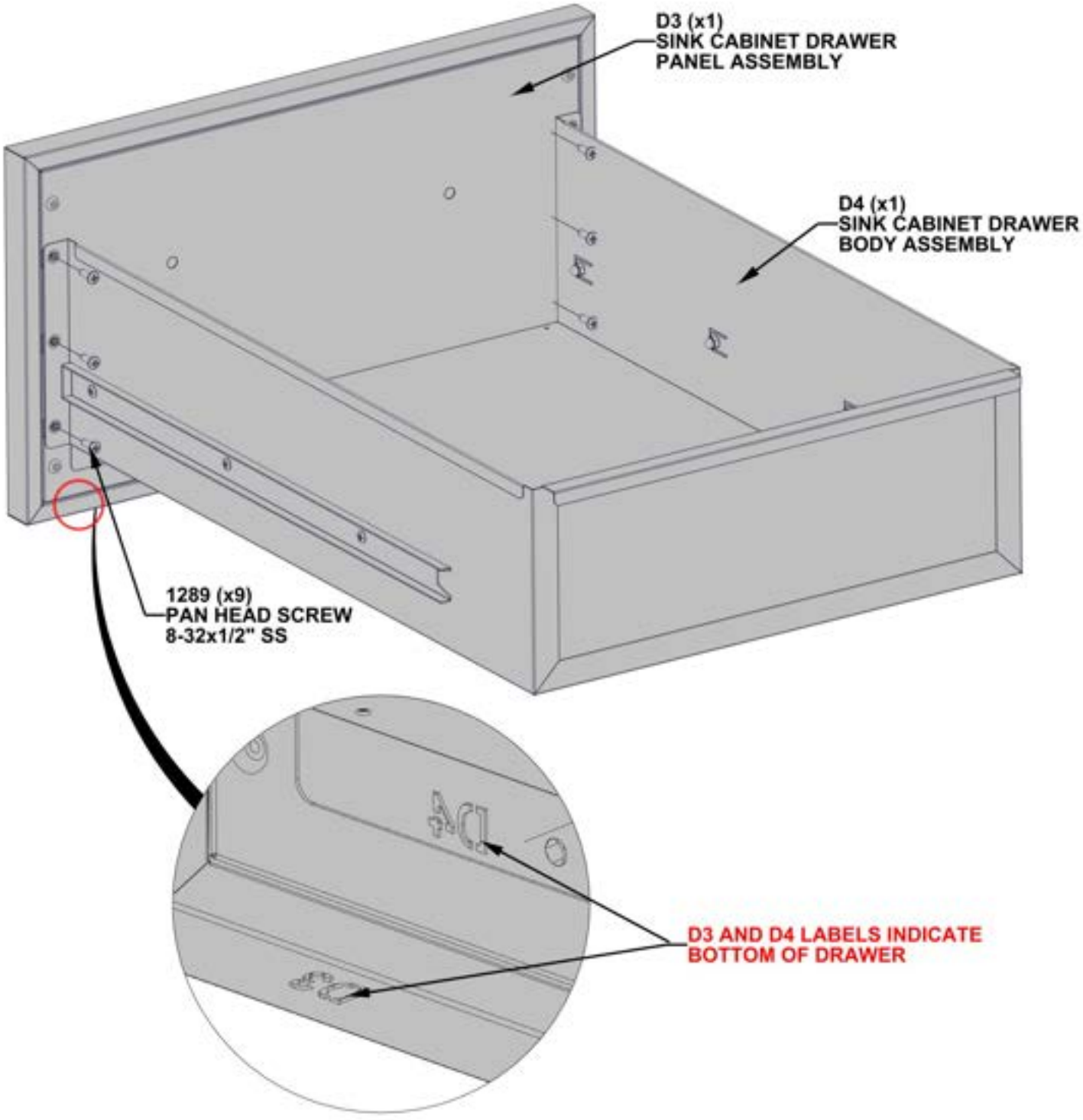

STEP 99B - KITCHEN DRAWER ASSEMBLY



H2 STAINLESS STEEL HANDLE - A4M03024
(x1) 5/8"x1 9/16"x11 13/16" (16x40x300)

Qty	PartNo	Description
2	H101307	SHOULDER BOLT 8-32x30mm SS

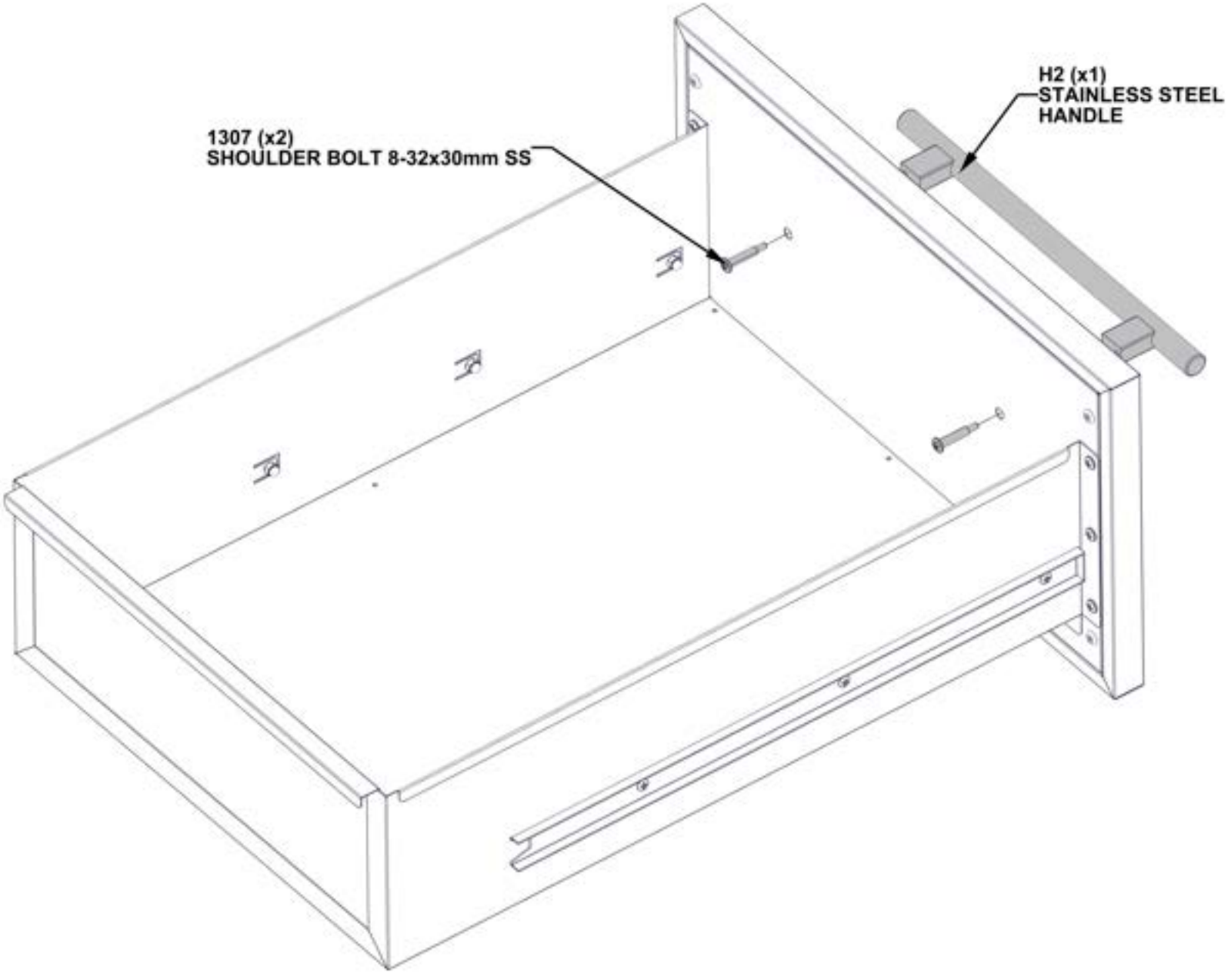

STEP 100 - KITCHEN DRAWER INSTALLATION



DRAWER ASSEMBLY
FROM STEP 99

- ONLY KITCHEN CABINETS ARE SHOWN FOR DETAIL.
- ATTACH DRAWER ASSEMBLY BY ALIGNING BOTH ENDS OF FACTORY ASSEMBLED DRAWER SLIDES WITH ONE ANOTHER.
- PRESS TOGETHER UNTIL DRAWER SLIDES CONNECT.

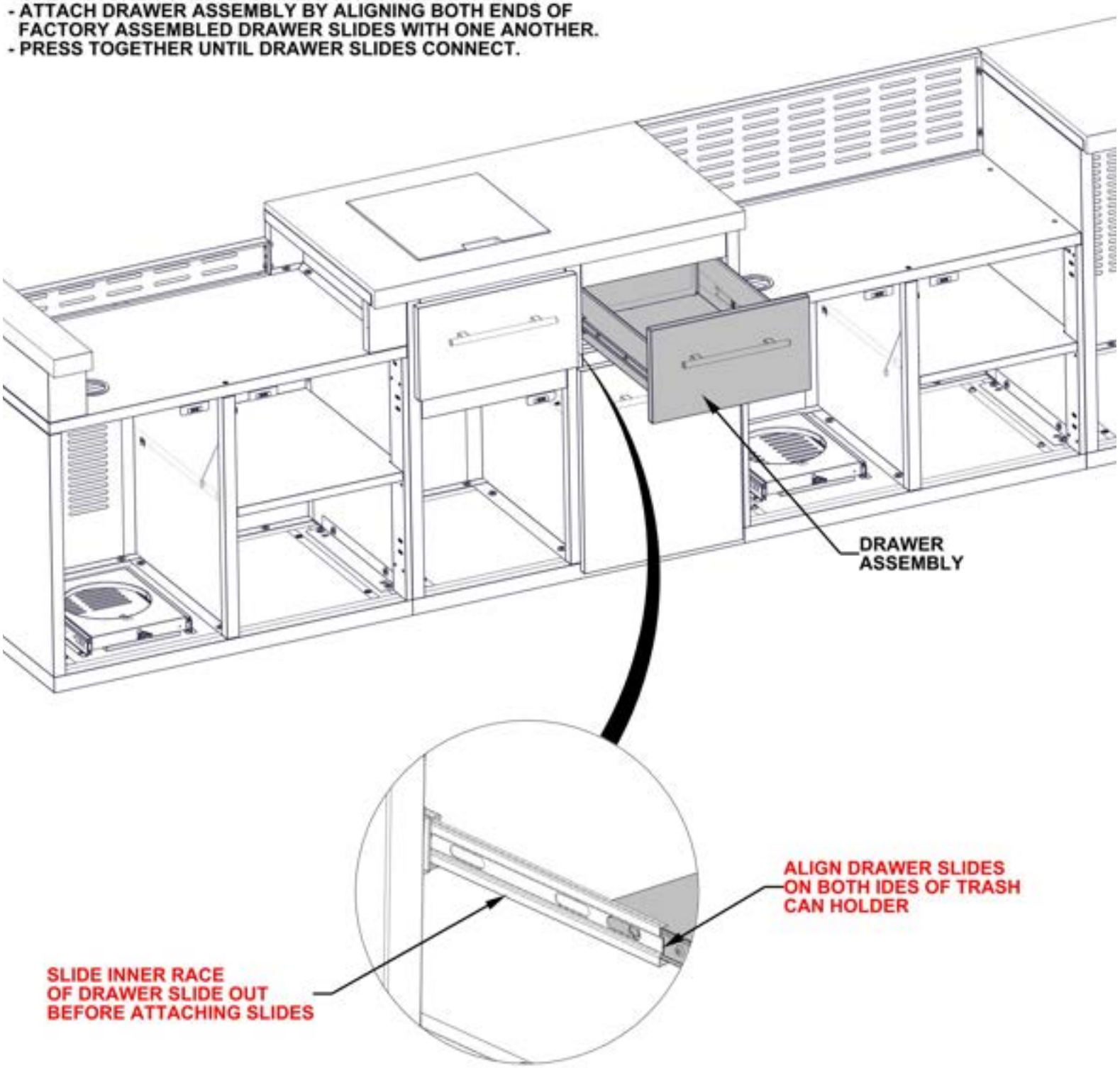

STEP 101A - DOOR ASSEMBLY

Qty	PartNo	Description
20	H101185	PHILLIPS FLAT HEAD 8-32x.5 SCREW

D1 PIZZA OVEN CABINET DOOR ASSEMBLY L - A4M03546
(x1) 28 7/16"x19 5/8"x15/16" (24x498x722.5)

D2 PIZZA OVEN CABINET DOOR ASSEMBLY R - A4M03555
(x1) 28 7/16"x19 5/8"x15/16" (24x498x722.5)

D6 SINK CABINET DOOR ASSEMBLY L - A4M03577
(x1) 22 1/4"x17 13/16"x15/16" (24x452x565)

D7 GRILL CABINET DOOR ASSEMBLY L - A4M03587
(x1) 24 13/16"x19 1/16"x15/16" (24x484.15x630)

D8 GRILL CABINET DOOR ASSEMBLY R - A4M03590
(x1) 24 13/16"x19 1/16"x15/16" (24x484.15x630)

A4M03025 FULL OVERLAY HINGE
(x10)

- INSTALL CABINET HINGES TO THE FIVE DOORS.

DO NOT OVERTIGHTEN HARDWARE

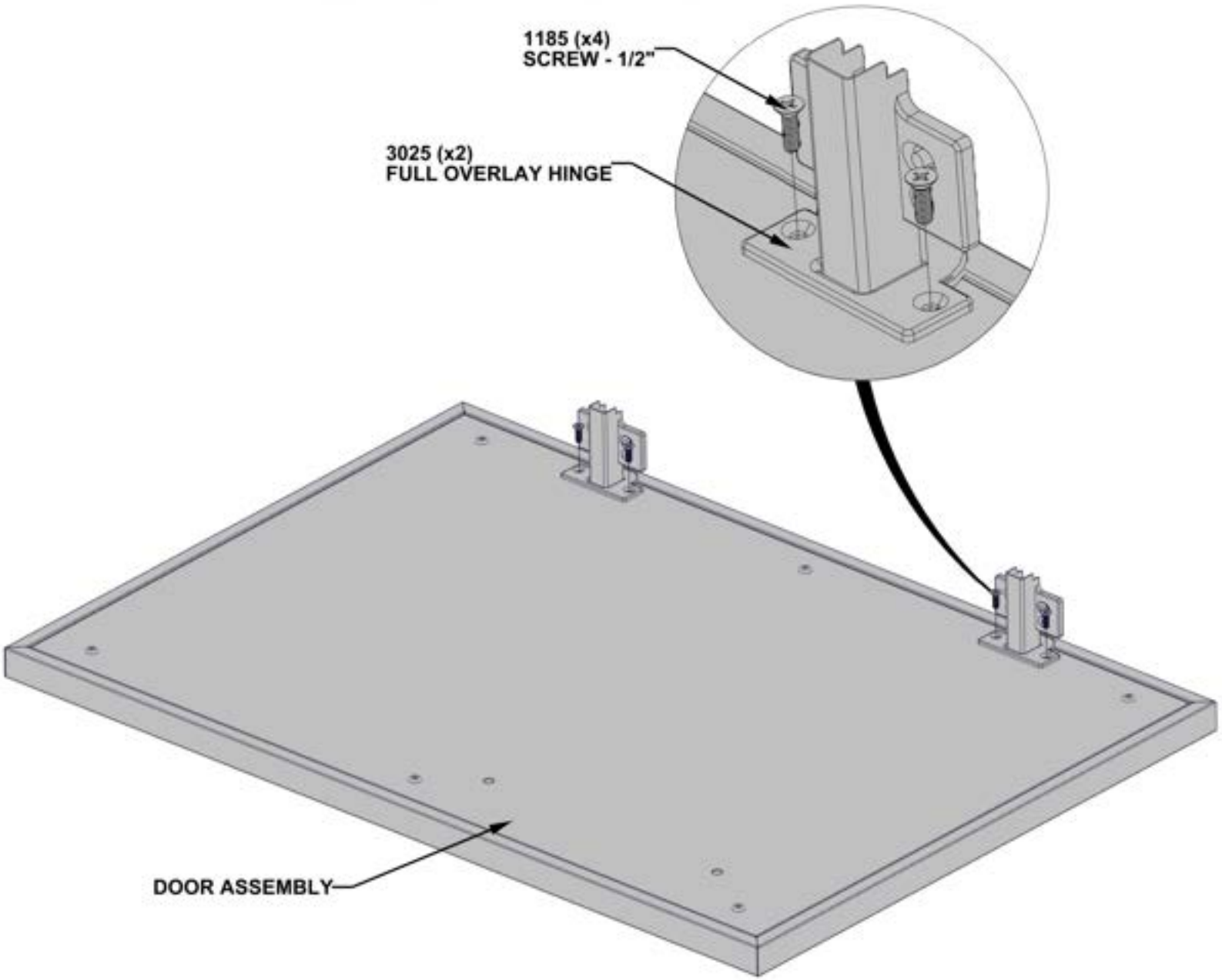

STEP 101B - DOOR ASSEMBLY

Qty	PartNo	Description
10	H101307	SHOULDER BOLT 8-32x30mm SS



H2 STAINLESS STEEL HANDLE - A4M03024
(x5) 5/8"x1 9/16"x11 13/16" (16x40x300)

- INSTALL CABINET HANDLES ON THE FIVE DOORS FROM PREVIOUS STEP.

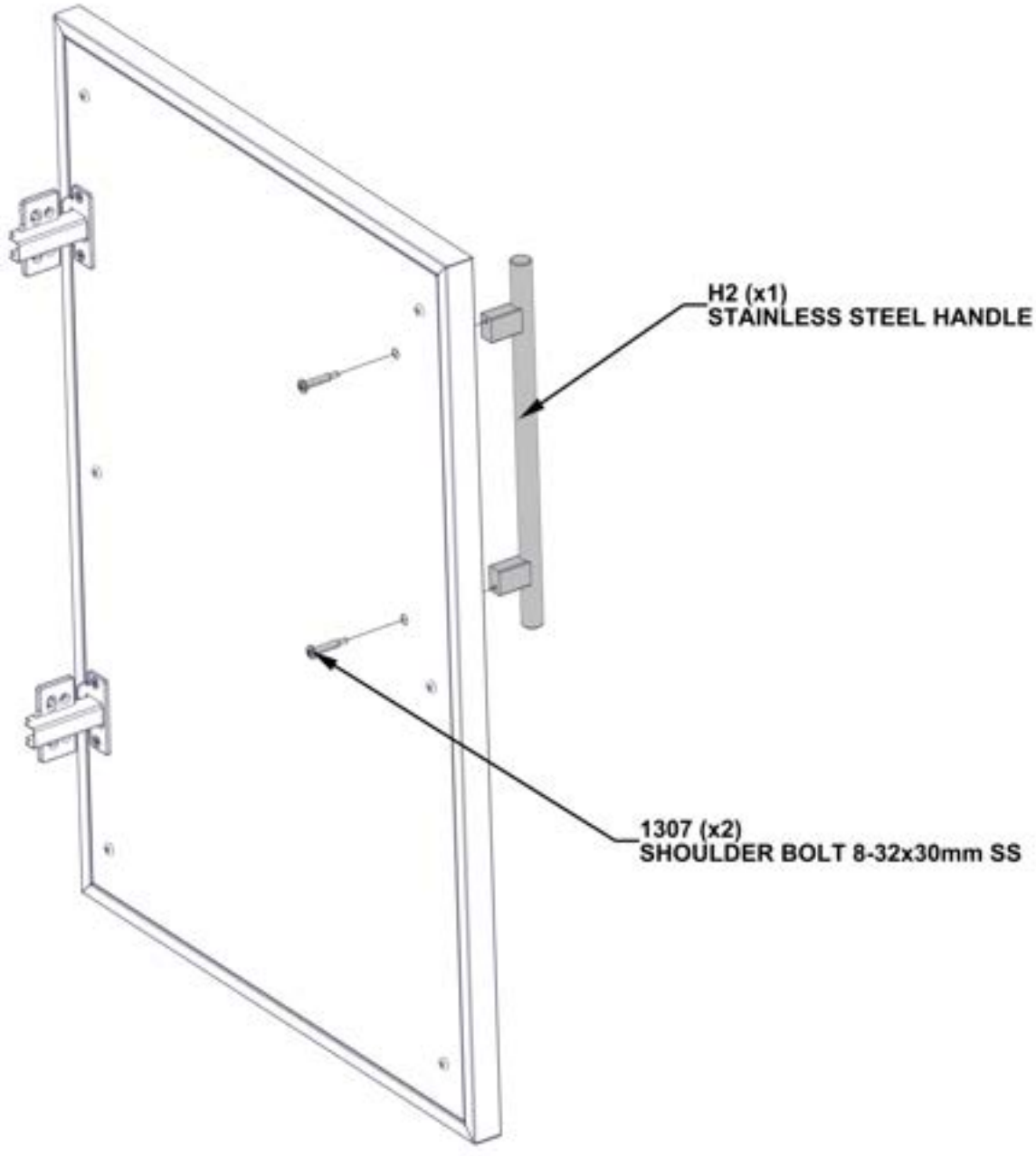

STEP 102 - CABINET DOOR ATTACHMENT



D1 PIZZA OVEN CABINET DOOR ASSEMBLY L - A4M03546
(x1) 28 7/16"x19 5/8"x15/16" (24x498x722.5)

Qty	PartNo	Description
8	H101185	PHILLIPS FLAT HEAD 8-32x.5 SCREW

- ONLY KITCHEN CABINETS ARE SHOWN FOR DETAIL.
- FOR THIS STEP IT IS HELPFUL TO HAVE AN ADDITIONAL PERSON HELP HOLD DOOR IN PLACE.
- WITH CABINET HINGES ATTACHED TO DOOR, ALIGN HOLES IN HINGE BRACKET WITH THREADED INSERTS IN SIDE OF CABINET PANEL.

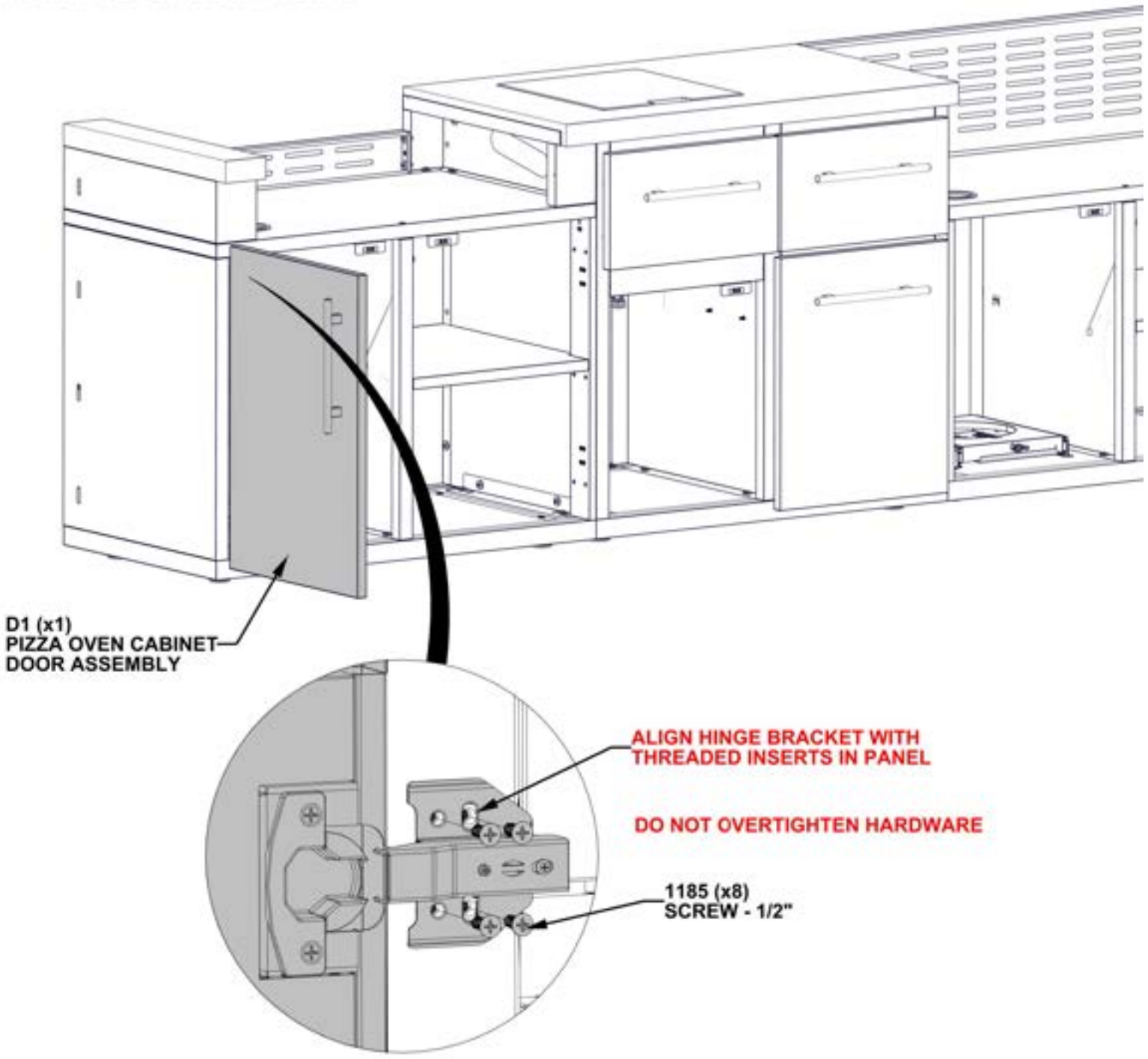

STEP 103 - CABINET DOOR ATTACHMENT



Qty	PartNo	Description
8	H101185	PHILLIPS FLAT HEAD 8-32x.5 SCREW

D2 PIZZA OVEN CABINET DOOR ASSEMBLY R - A4M03555
(x1) 28 7/16"x19 5/8"x15/16" (24x498x722.5)

- ONLY KITCHEN CABINETS ARE SHOWN FOR DETAIL.
- FOR THIS STEP IT IS HELPFUL TO HAVE AN ADDITIONAL PERSON HELP HOLD DOOR IN PLACE.
- WITH CABINET HINGES ATTACHED TO DOOR, ALIGN HOLES IN HINGE BRACKET WITH THREADED INSERTS IN SIDE OF CABINET PANEL.

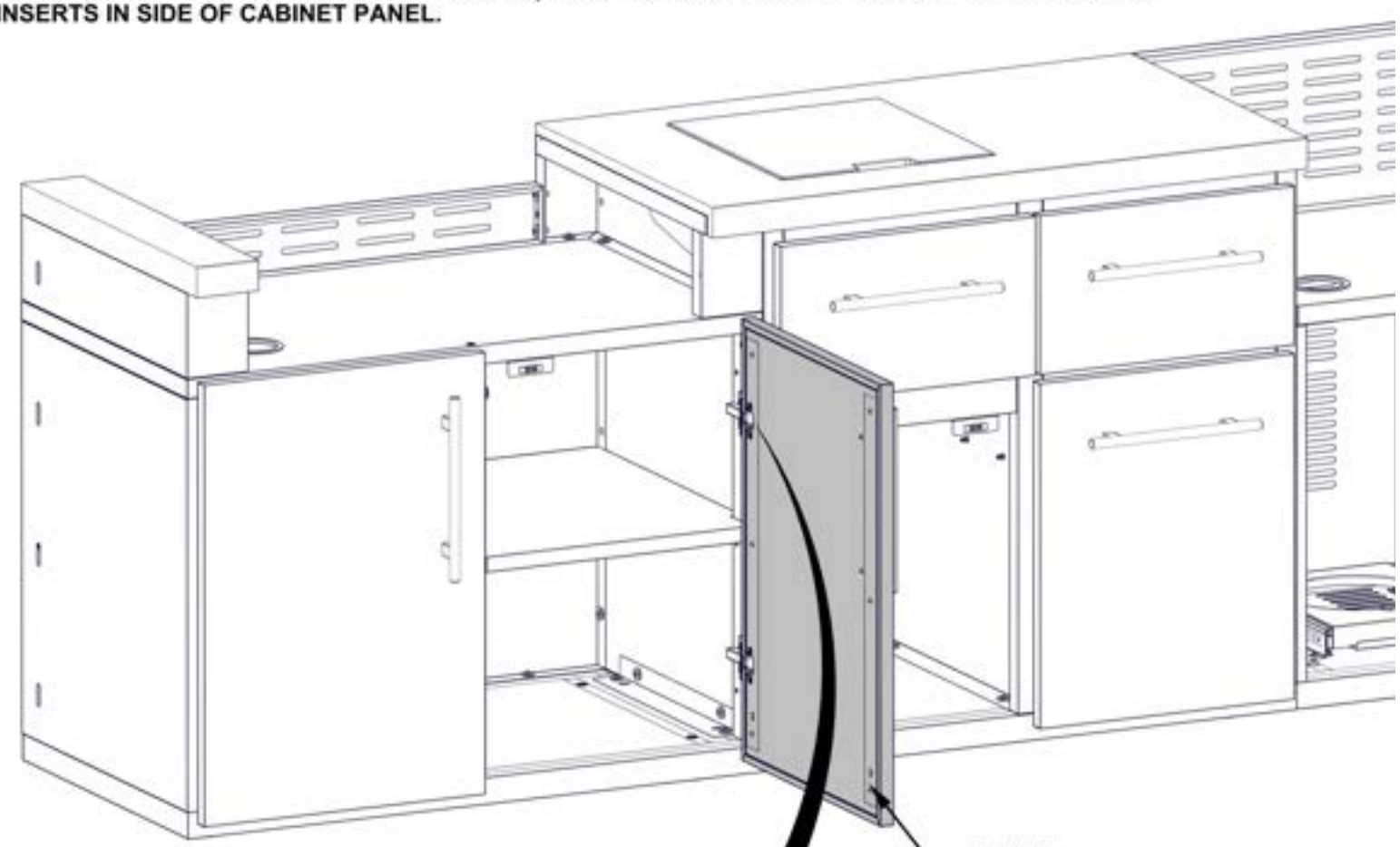

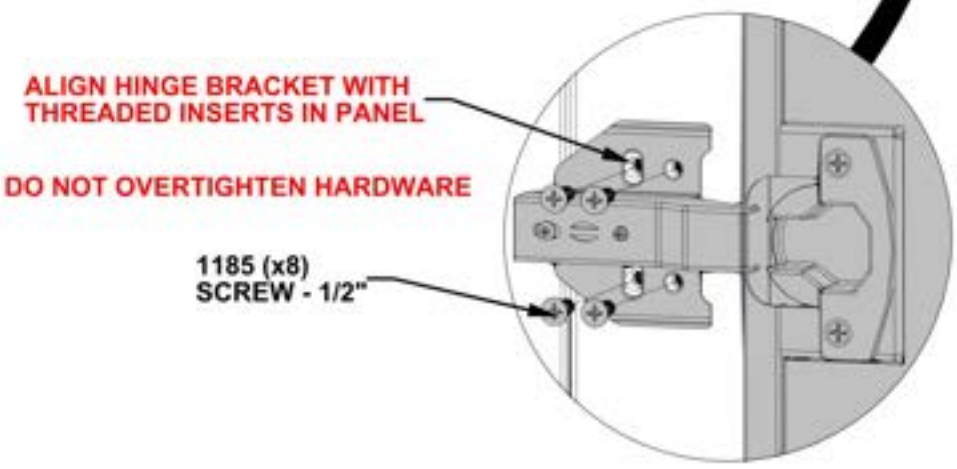

STEP 104 - CABINET DOOR ATTACHMENT



D6 SINK CABINET DOOR ASSEMBLY L - A4M03577
(x1) 22 1/4"x17 13/16"x15/16" (24x452x565)

Qty	PartNo	Description
8	H101185	PHILLIPS FLAT HEAD 8-32x.5 SCREW

- ONLY KITCHEN CABINETS ARE SHOWN FOR DETAIL.
- FOR THIS STEP IT IS HELPFUL TO HAVE AN ADDITIONAL PERSON HELP HOLD DOOR IN PLACE.
- WITH CABINET HINGES ATTACHED TO DOOR, ALIGN HOLES IN HINGE BRACKET WITH THREADED INSERTS IN SIDE OF CABINET PANEL.

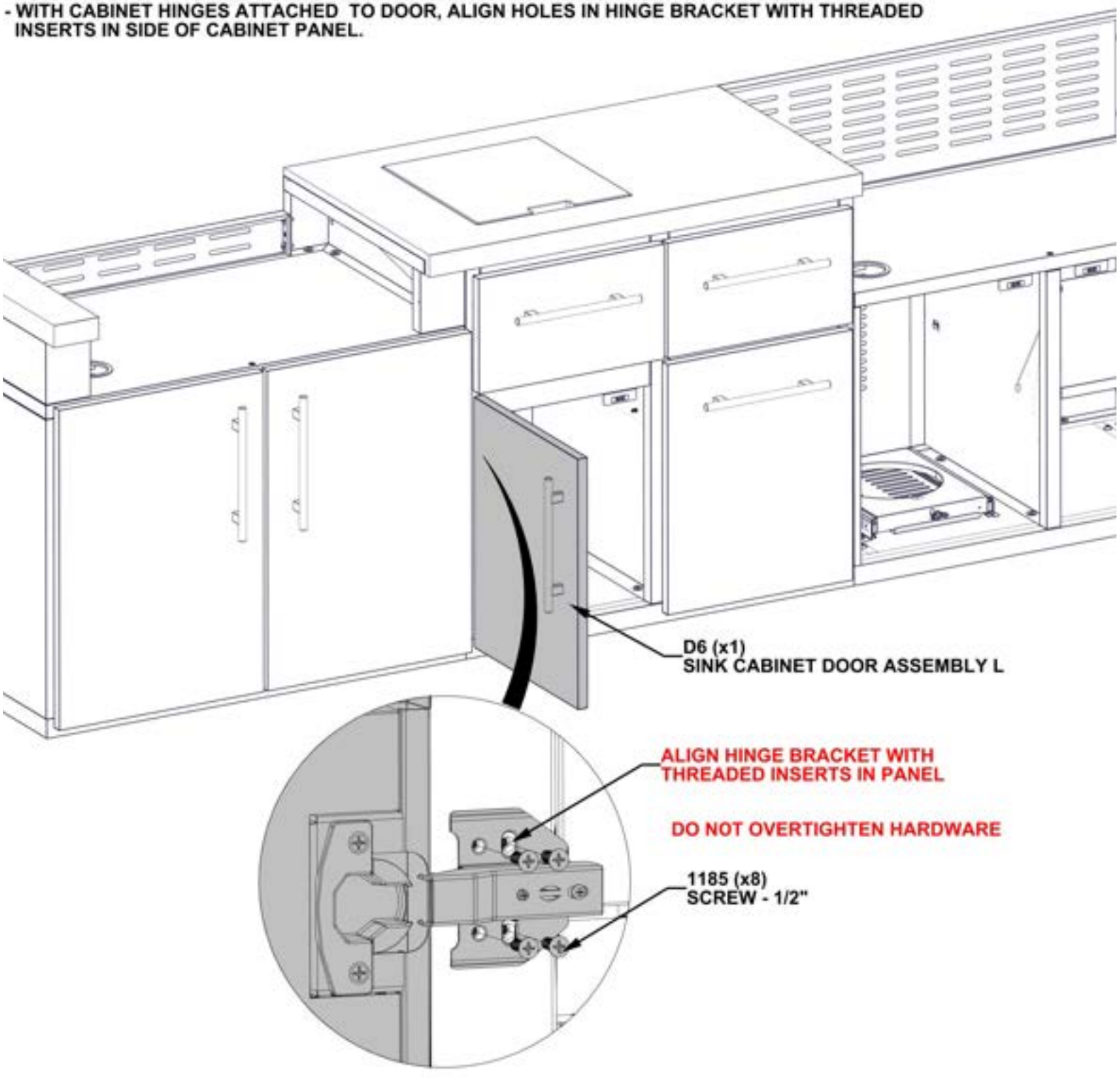

STEP 105 - CABINET DOOR ATTACHMENT



D7 GRILL CABINET DOOR ASSEMBLY L - A4M03587
(x1) 24 13/16"x19 1/16"x15/16" (24x484.15x630)

Qty	PartNo	Description
8	H101185	PHILLIPS FLAT HEAD 8-32x.5 SCREW

- ONLY KITCHEN CABINETS ARE SHOWN FOR DETAIL.
- FOR THIS STEP IT IS HELPFUL TO HAVE AN ADDITIONAL PERSON HELP HOLD DOOR IN PLACE.
- WITH CABINET HINGES ATTACHED TO DOOR, ALIGN HOLES IN HINGE BRACKET WITH THREADED INSERTS IN SIDE OF CABINET PANEL.

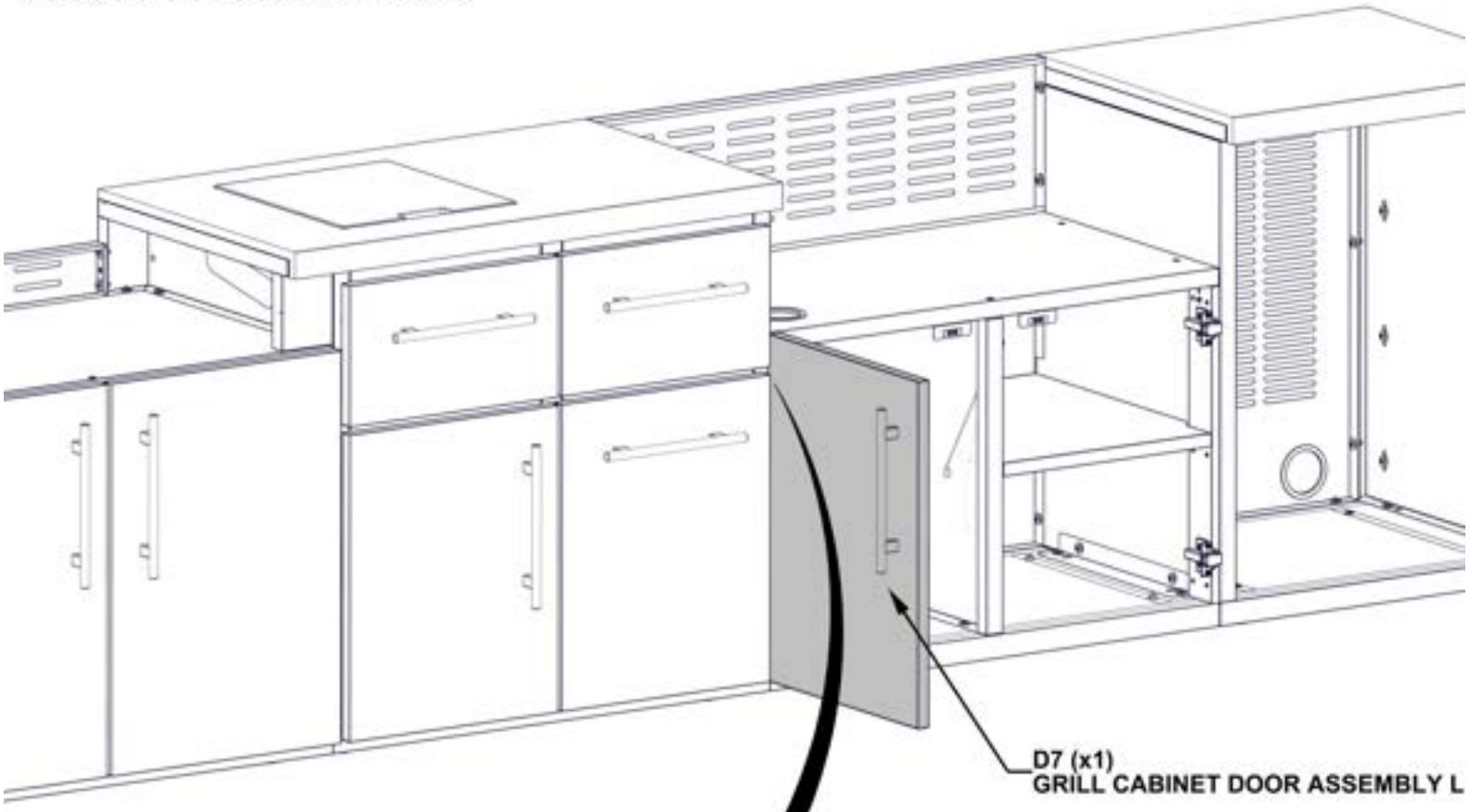

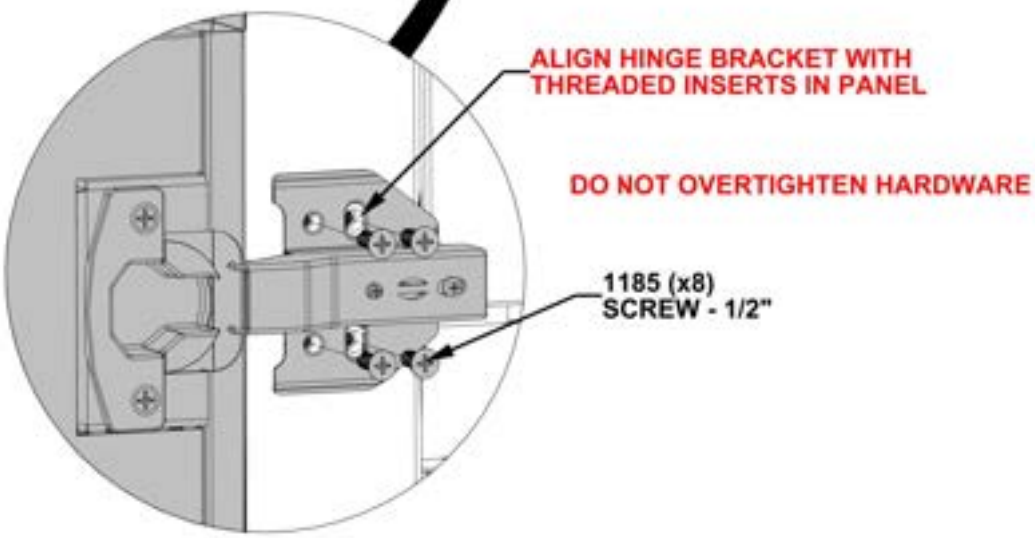

STEP 106 - CABINET DOOR ATTACHMENT



D8 GRILL CABINET DOOR ASSEMBLY R - A4M03590
(x1) 24 13/16"x19 1/16"x15/16" (24x484.15x630)

Qty	PartNo	Description
8	H101185	PHILLIPS FLAT HEAD 8-32x.5 SCREW

- ONLY KITCHEN CABINETS ARE SHOWN FOR DETAIL.
- FOR THIS STEP IT IS HELPFUL TO HAVE AN ADDITIONAL PERSON HELP HOLD DOOR IN PLACE.
- WITH CABINET HINGES ATTACHED TO DOOR, ALIGN HOLES IN HINGE BRACKET WITH THREADED INSERTS IN SIDE OF CABINET PANEL.

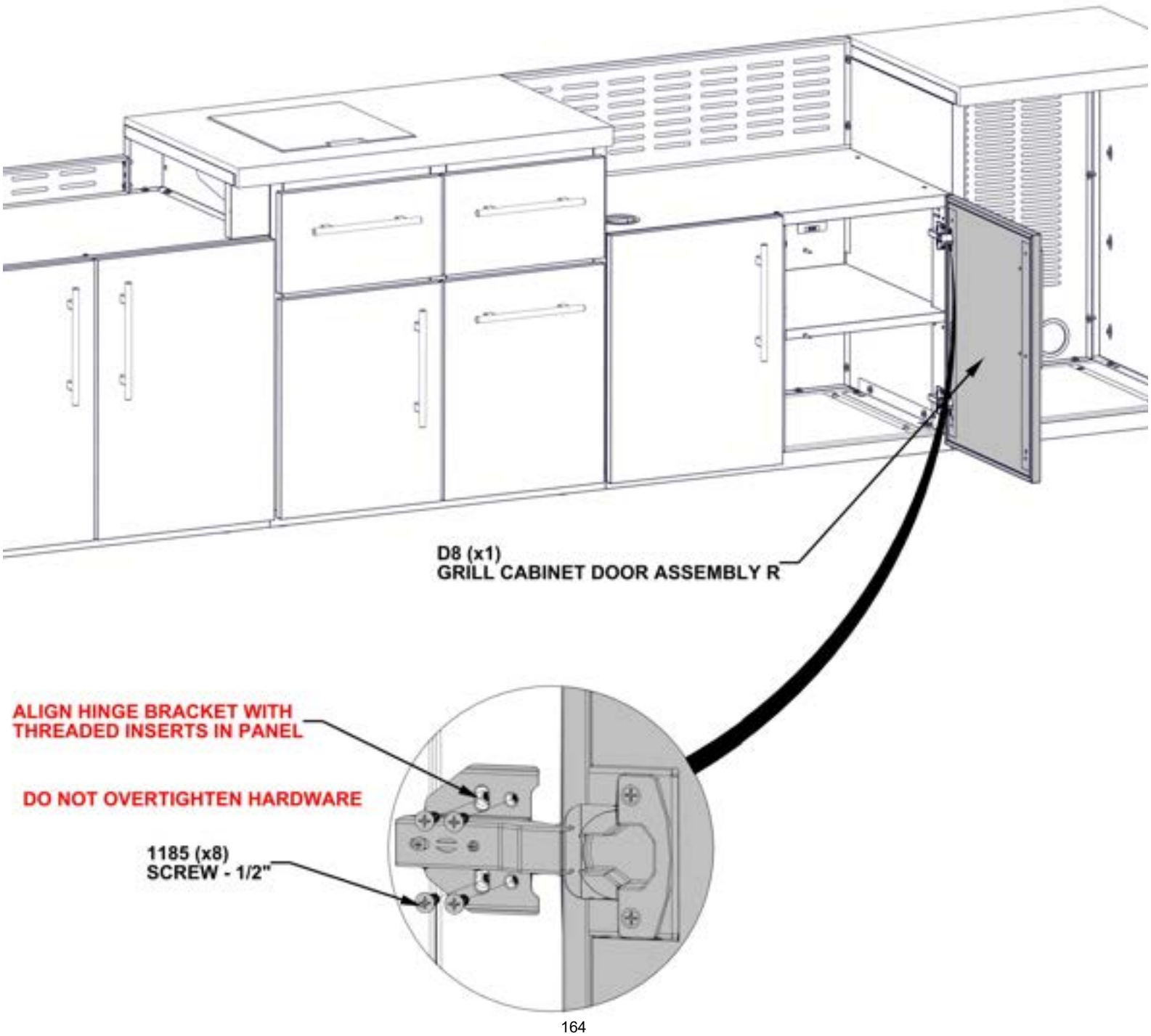

STEP 107 - BAR CABINET ASSEMBLY

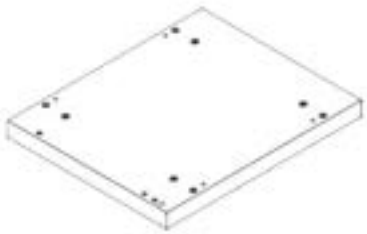

F5 FLOOR PANEL ASSEMBLY - A4M03611
(x1) 23 3/8"x19 1/8"x2 5/8" (66x486x594)

- ONLY KITCHEN CABINETS ARE SHOWN FOR DETAIL.
- POSITION FLOOR PANEL AS SHOWN BELOW.
- EACH FLOOR PANEL HAS FACTORY INSTALLED ADJUSTABLE FEET. USE PROVIDED HEX DRIVER TO ADJUST EACH FOOT UNTIL PANEL IS LEVEL.

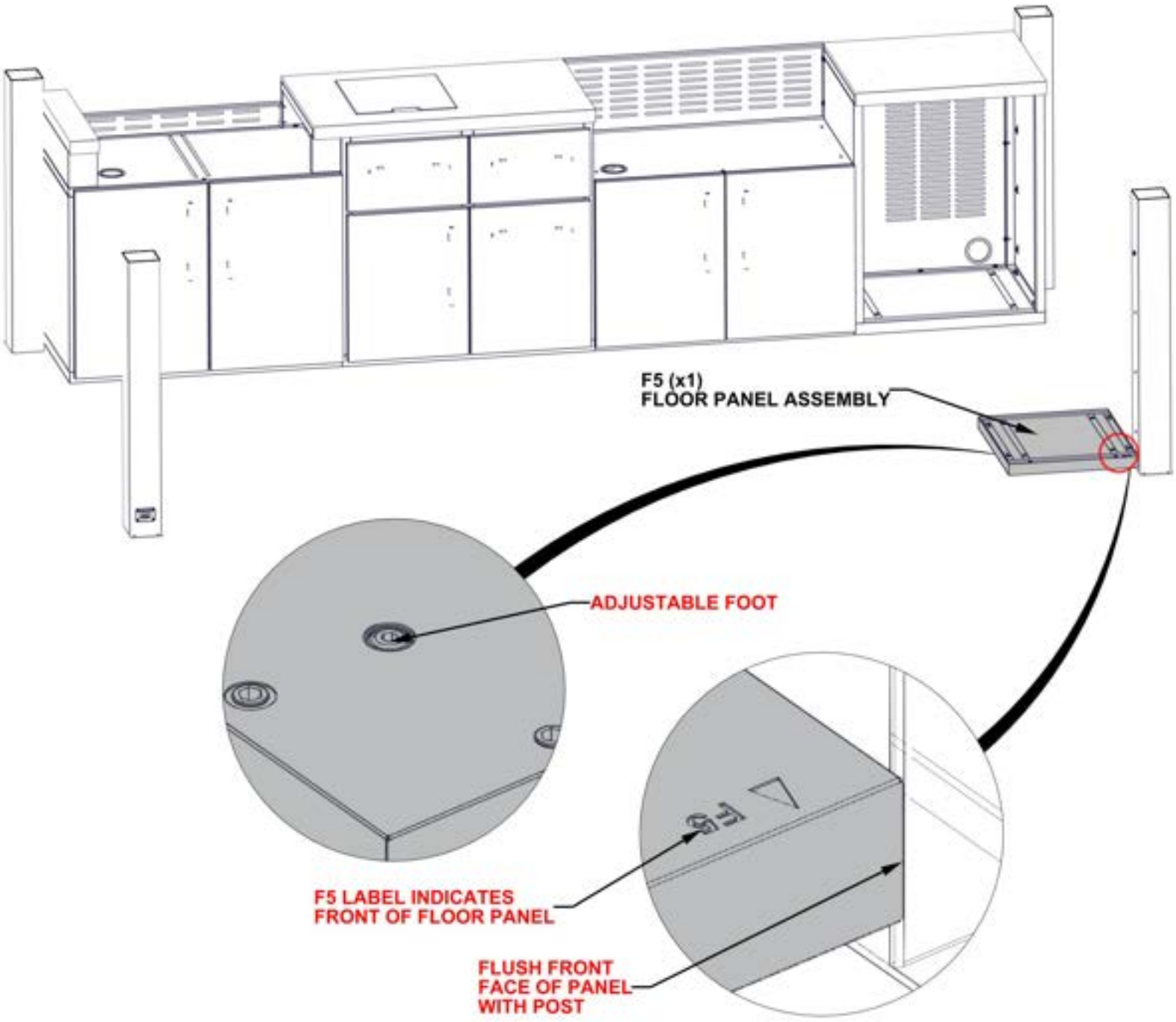

STEP 108A - BAR CABINET ASSEMBLY



S10 SIDE PANEL ASSEMBLY - A4M03613
(x1) 33 3/8"x23 3/8"x1 15/16" (50x594x848.2)

Qty	PartNo	Description
2	H101202	TORX PAN HEAD 1/4-20x3/4 ASSY

- ONLY BAR CABINET IS SHOWN FOR DETAIL.

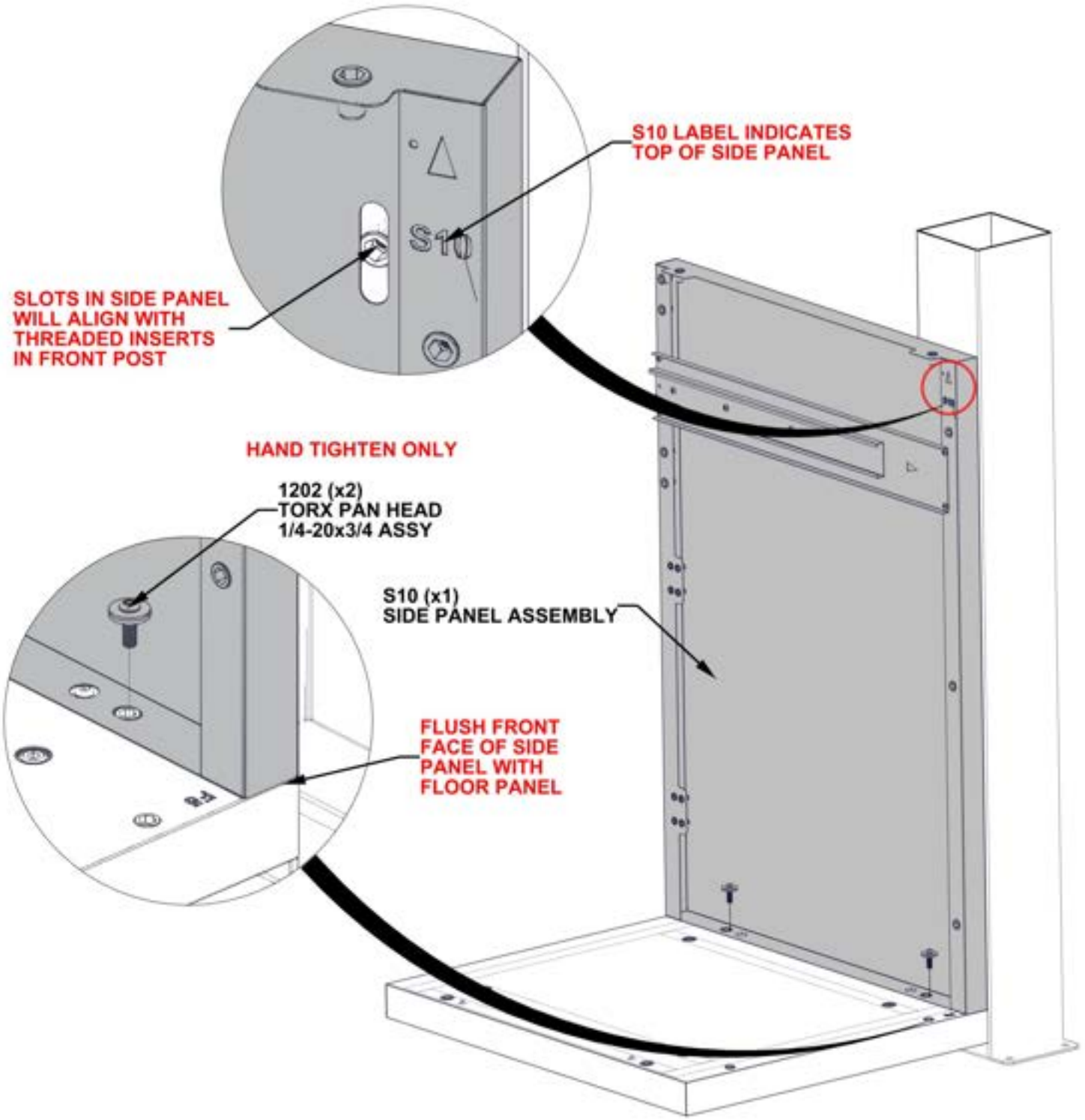

STEP 108B - BAR CABINET ASSEMBLY

Qty	PartNo	Description
4	H101202	TORX PAN HEAD 1/4-20x3/4 ASSY

- ONLY BAR CABINET IS SHOWN FOR DETAIL.

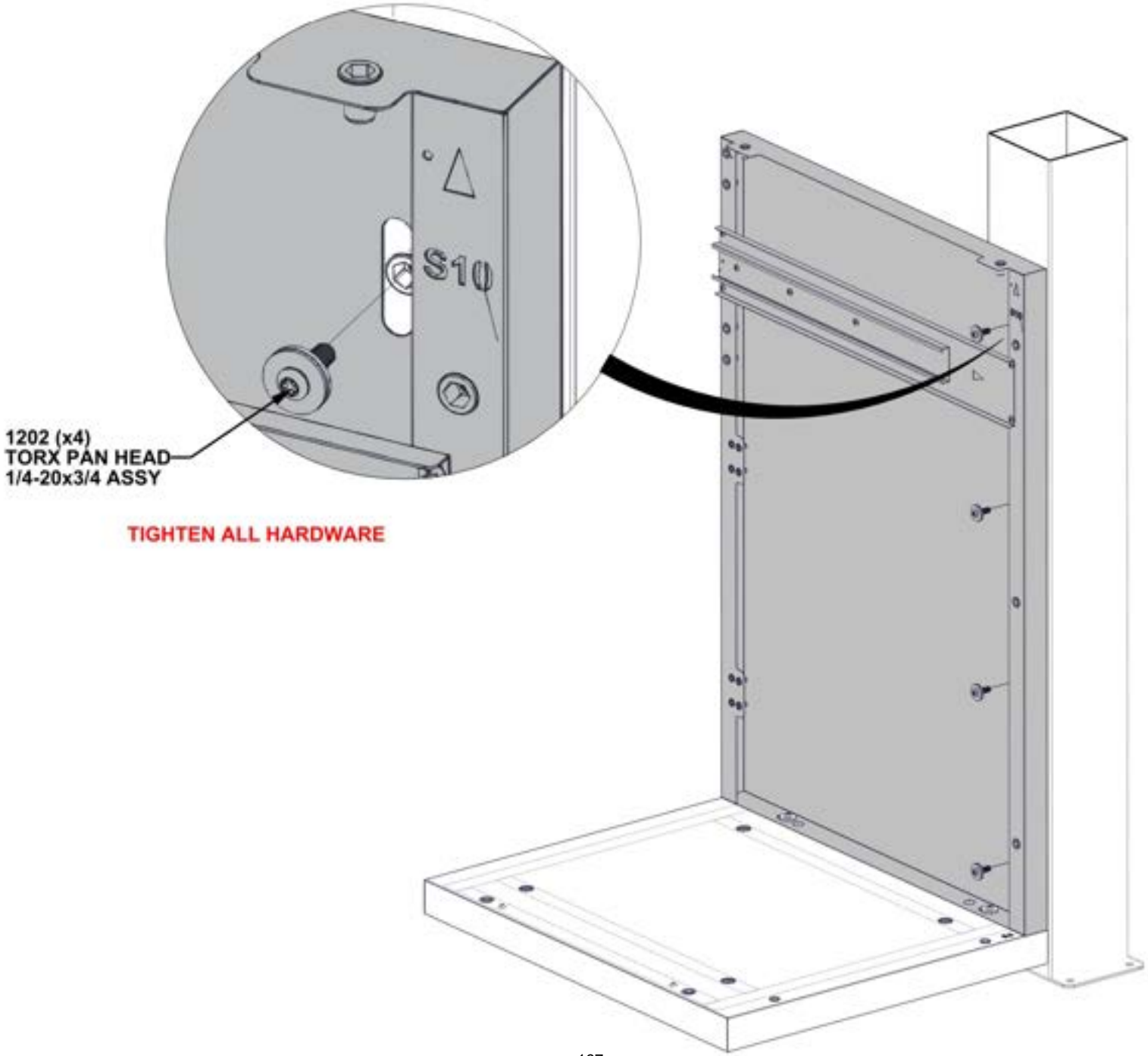

TIGHTEN ALL HARDWARE

STEP 109 - BAR CABINET ASSEMBLY



G5 BACK PANEL ASSEMBLY - A4M03624
(x1) 33 3/8"x16 5/16"x1 3/4" (45x414x847.2)

Qty	PartNo	Description
5	H101202	TORX PAN HEAD 1/4-20x3/4 ASSY

- ONLY BAR CABINET IS SHOWN FOR DETAIL.

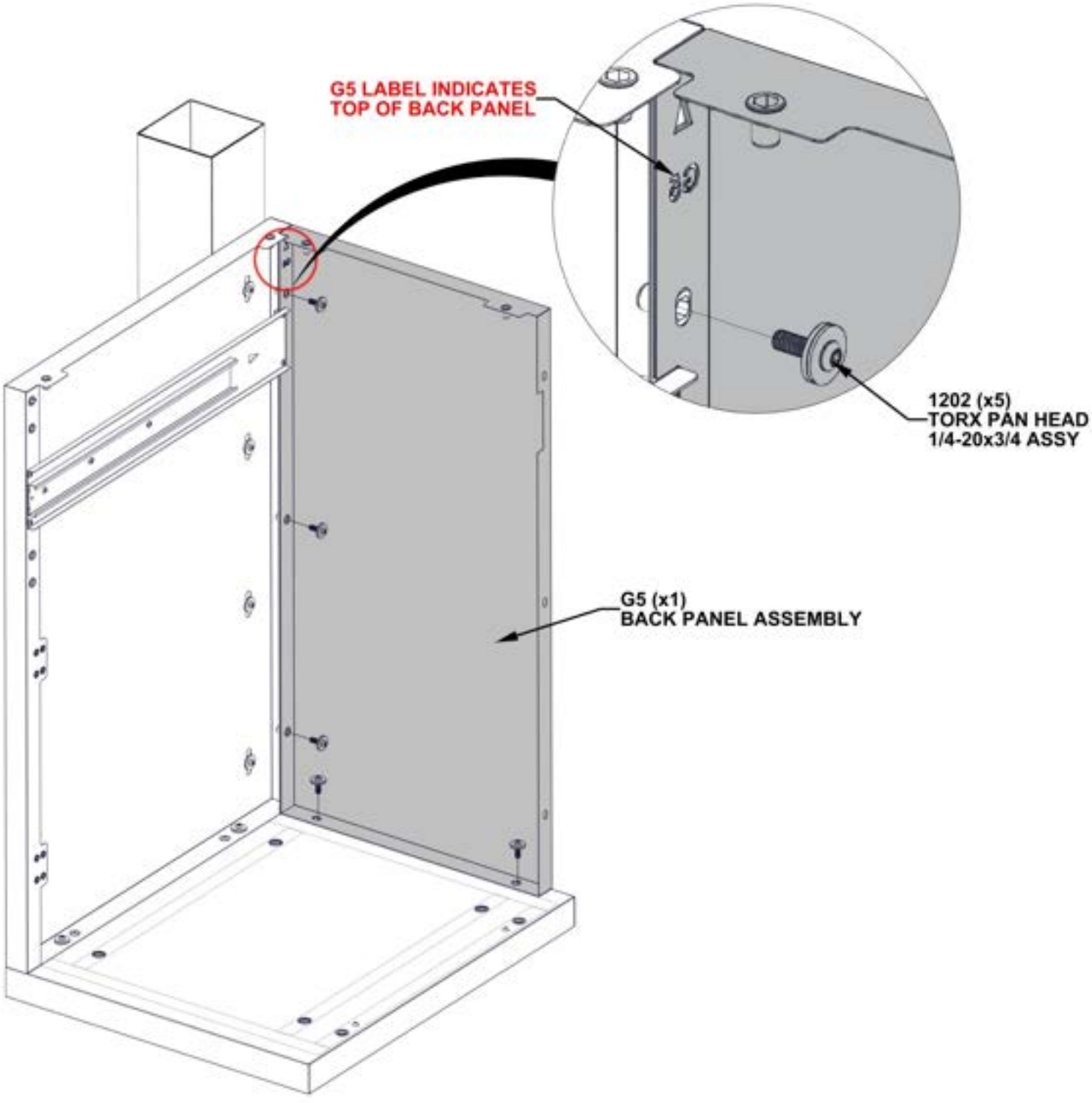

STEP 110 - BAR CABINET ASSEMBLY



S11 SIDE PANEL ASSEMBLY - A4M03614
(x1) 33 3/8"x23 3/8"x1 15/16" (49.2x594x848.2)

Qty	PartNo	Description
5	H101202	TORX PAN HEAD 1/4-20x3/4 ASSY

- ONLY BAR CABINET IS SHOWN FOR DETAIL.

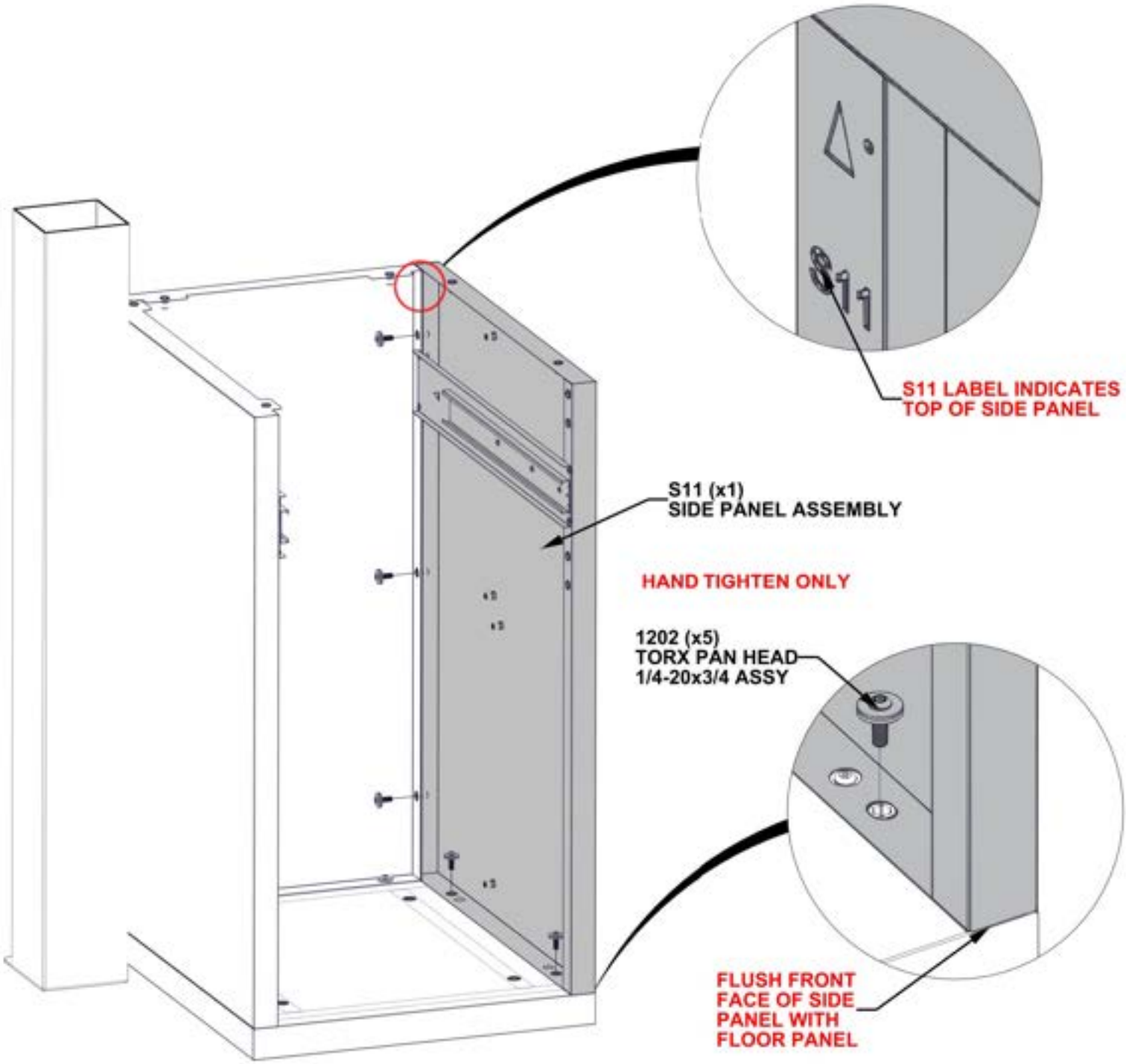

STEP 111 - BAR CABINET ASSEMBLY

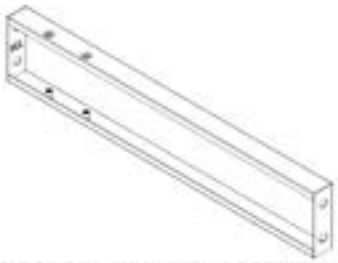

H7 HORIZONTAL CHANNEL ASSEMBLY - A4M03623
(x2) 16 5/16"x2 15/16"x1" (25x75x414)

Qty	PartNo	Description
8	H101202	TORX PAN HEAD 1/4-20x3/4 ASSY

- ONLY BAR CABINET IS SHOWN FOR DETAIL.
- HARDWARE ATTACHES ON INSIDE OF CABINET

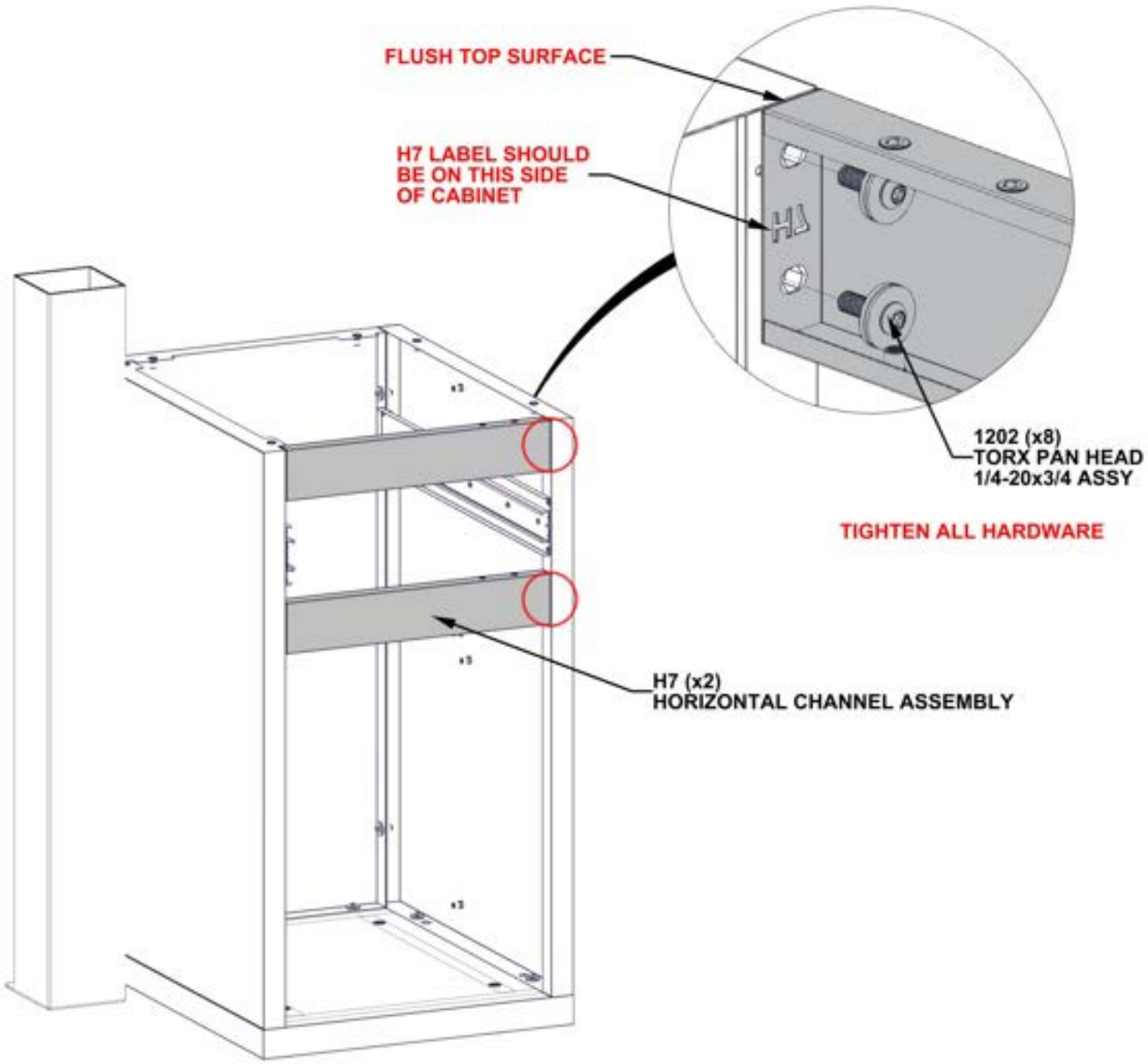

STEP 112 - BAR CABINET ASSEMBLY



A2 MAGNET BRACKET - A4M03026
(x1) 1"x1 1/4"x3 1/8" (25x31x80)

Qty	PartNo	Description
2	H101289	PAN HEAD SCREW 8-32x1/2" SS

- ONLY BAR CABINET IS SHOWN FOR DETAIL.

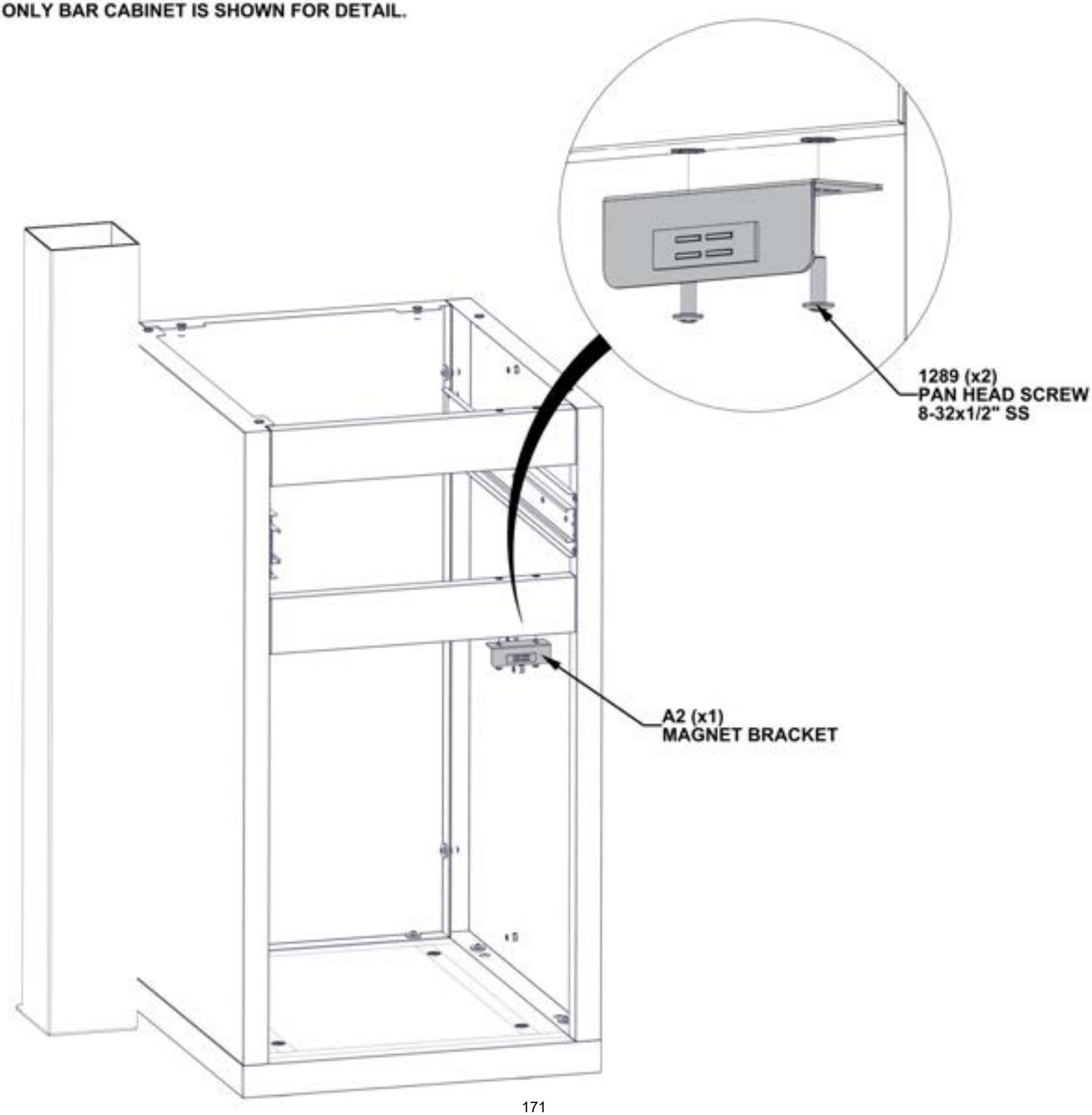

STEP 113 - BAR CABINET ASSEMBLY

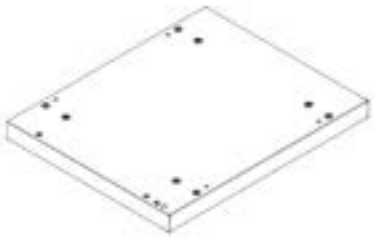

F5 FLOOR PANEL ASSEMBLY - A4M03611
(x1) 23 3/8"x19 1/8"x2 5/8" (66x486x594)

- ONLY KITCHEN CABINETS ARE SHOWN FOR DETAIL.
- POSITION FLOOR PANEL AS SHOWN BELOW.
- EACH FLOOR PANEL HAS FACTORY INSTALLED ADJUSTABLE FEET. USE PROVIDED HEX DRIVER TO ADJUST EACH FOOT UNTIL PANEL IS LEVEL.

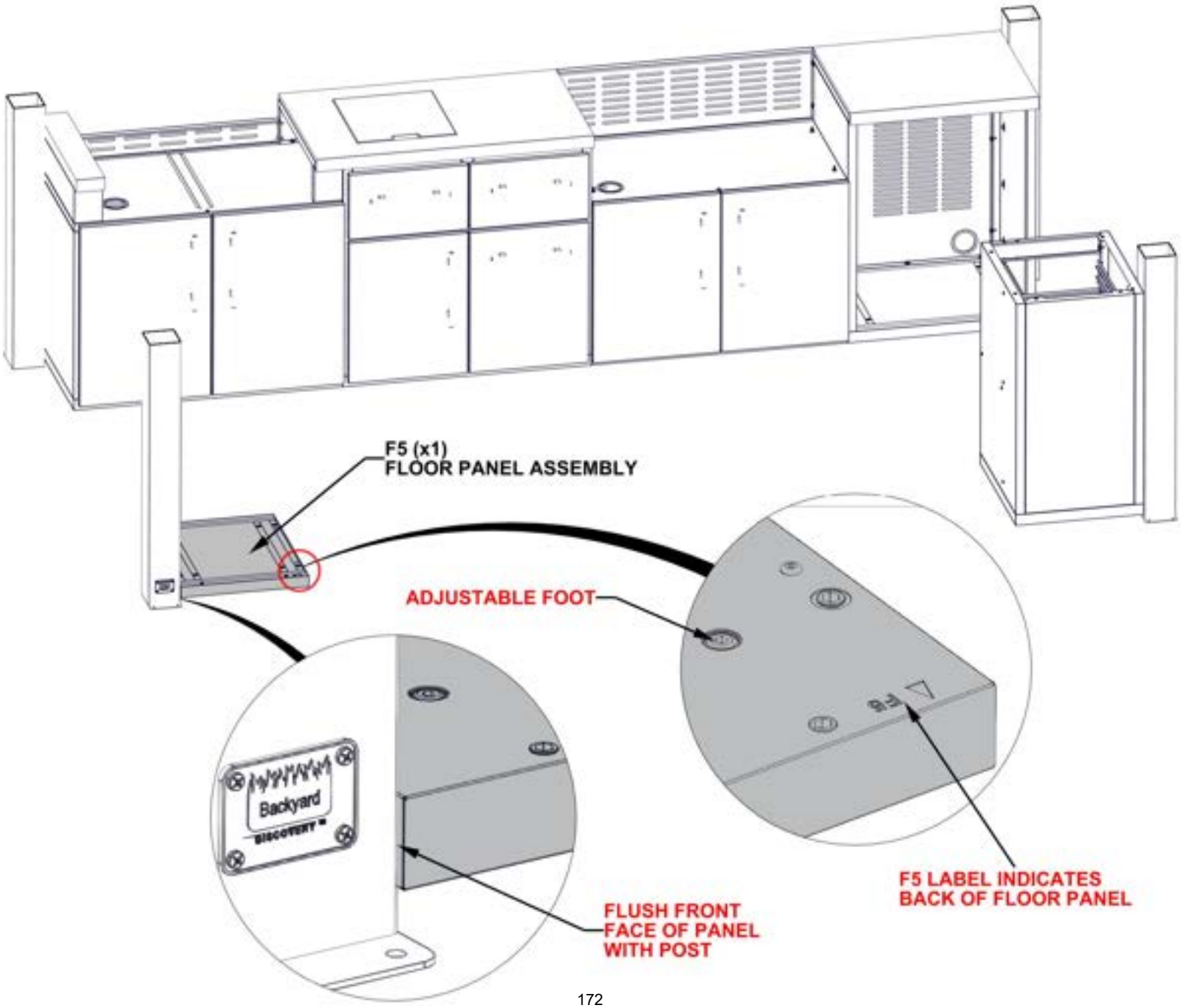

STEP 114A - BAR CABINET ASSEMBLY



S9 SIDE PANEL ASSEMBLY - A4M03638
(x1) 33 3/8"x23 3/8"x1 15/16" (50x594x848.2)

Qty	PartNo	Description
2	H101202	TORX PAN HEAD 1/4-20x3/4 ASSY

- ONLY BAR CABINET IS SHOWN FOR DETAIL.

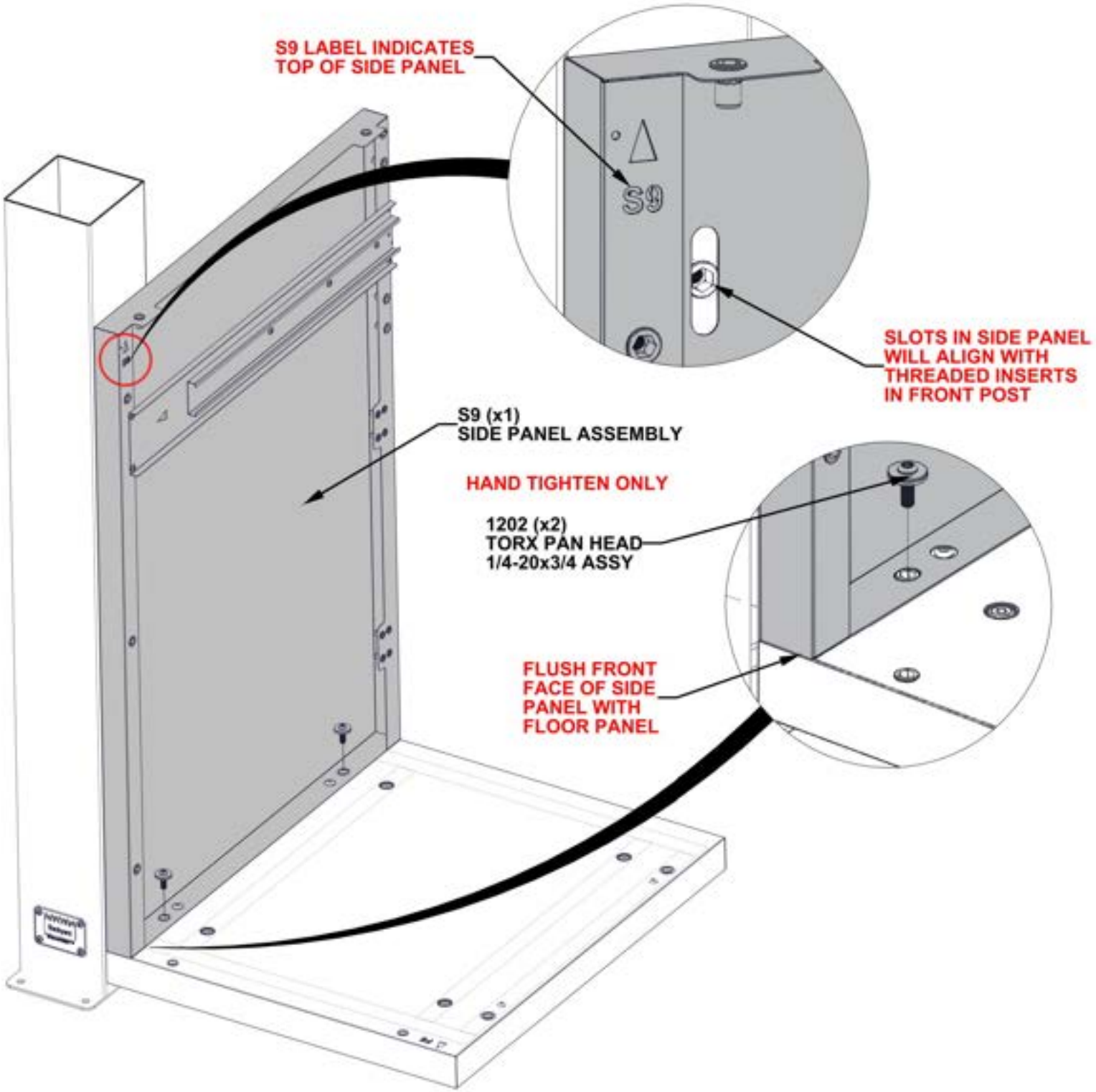

STEP 114B - BAR CABINET ASSEMBLY

Qty	PartNo	Description
4	H101202	TORX PAN HEAD 1/4-20x3/4 ASSY

- ONLY BAR CABINET IS SHOWN FOR DETAIL.

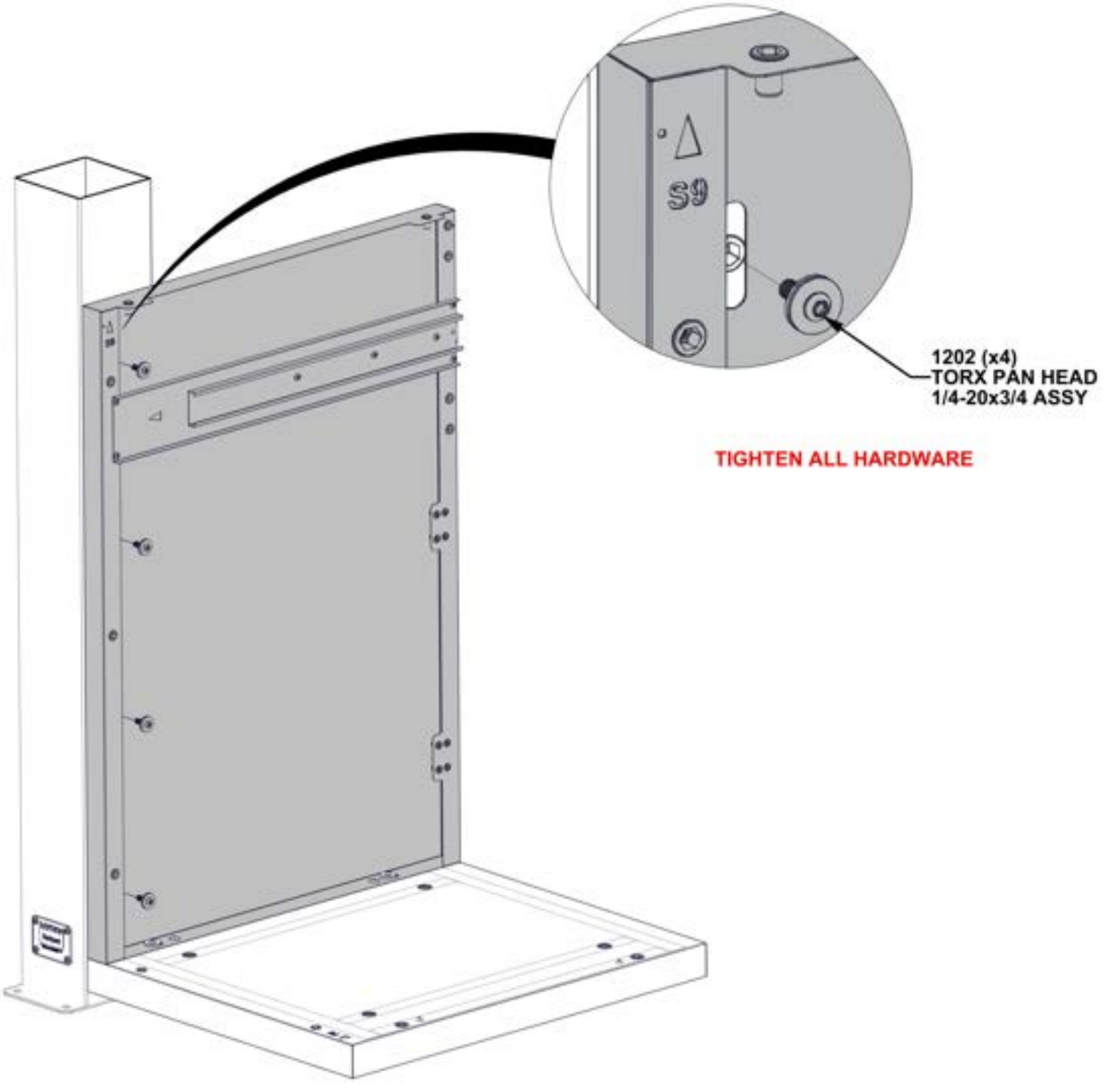

TIGHTEN ALL HARDWARE

STEP 115 - BAR CABINET ASSEMBLY



G5 BACK PANEL ASSEMBLY - A4M03624
(x1) 33 3/8"x16 5/16"x1 3/4" (45x414x847.2)

Qty	PartNo	Description
5	H101202	TORX PAN HEAD 1/4-20x3/4 ASSY

- ONLY BAR CABINET IS SHOWN FOR DETAIL.

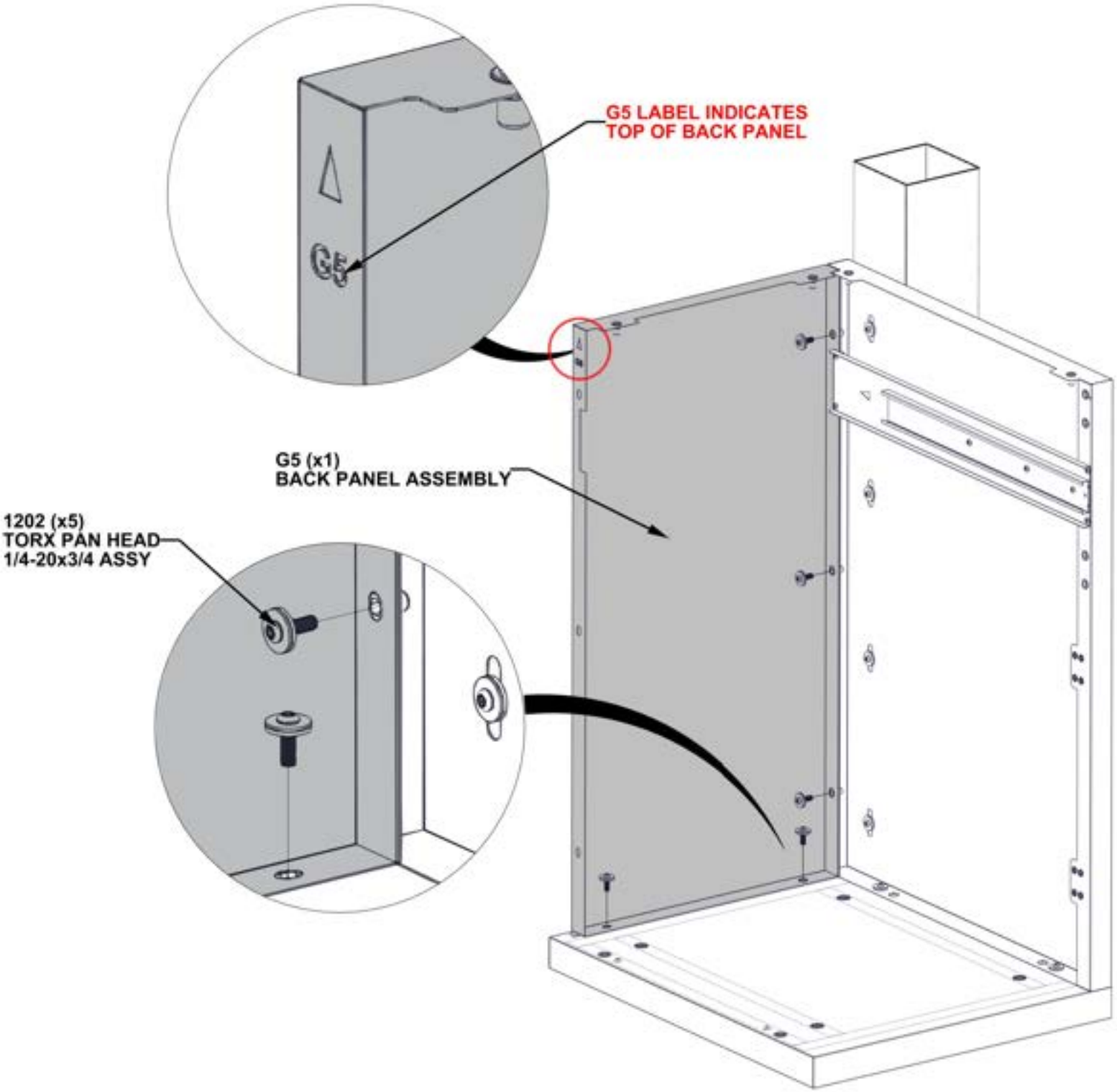

STEP 116 - BAR CABINET ASSEMBLY

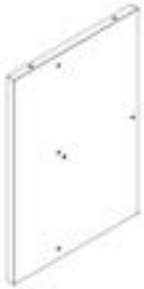

Qty	PartNo	Description
5	H101202	TORX PAN HEAD 1/4-20x3/4 ASSY

S12 (x1) SIDE PANEL ASSEMBLY - A4M03637
33 3/8"x23 3/8"x1 15/16" (49.2x594x848.2)

- ONLY BAR CABINET IS SHOWN FOR DETAIL.

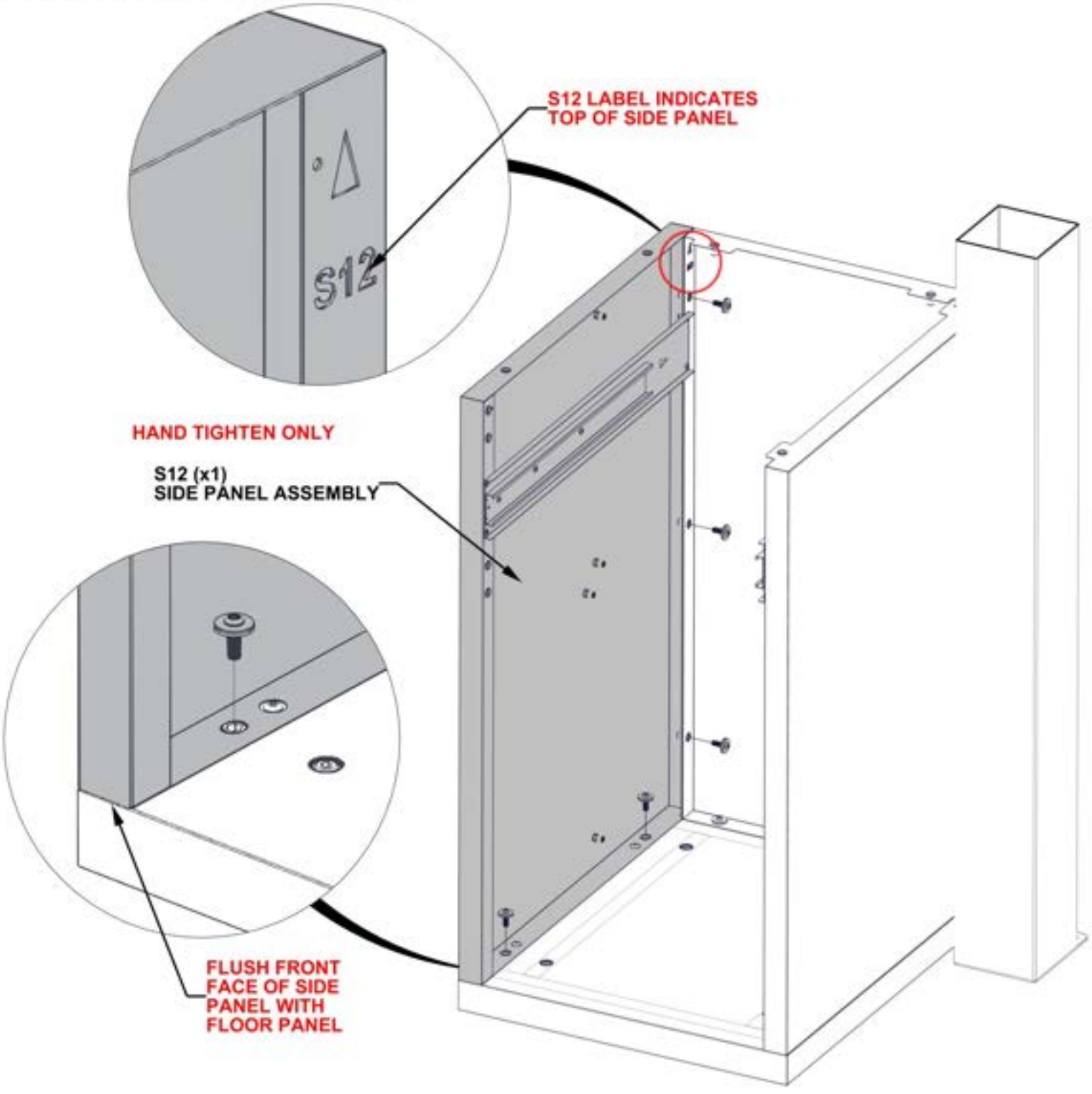

STEP 117 - BAR CABINET ASSEMBLY

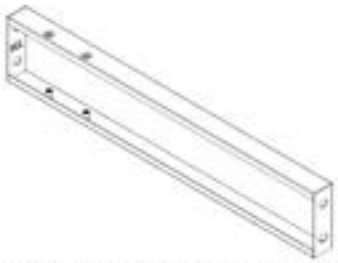

H7 HORIZONTAL CHANNEL ASSEMBLY - A4M03623
(x1) 16 5/16"x2 15/16"x1" (25x75x414)

Qty	PartNo	Description
8	H101202	TORX PAN HEAD 1/4-20x3/4 ASSY

- ONLY BAR CABINET IS SHOWN FOR DETAIL.
- HARDWARE ATTACHES ON INSIDE OF CABINET

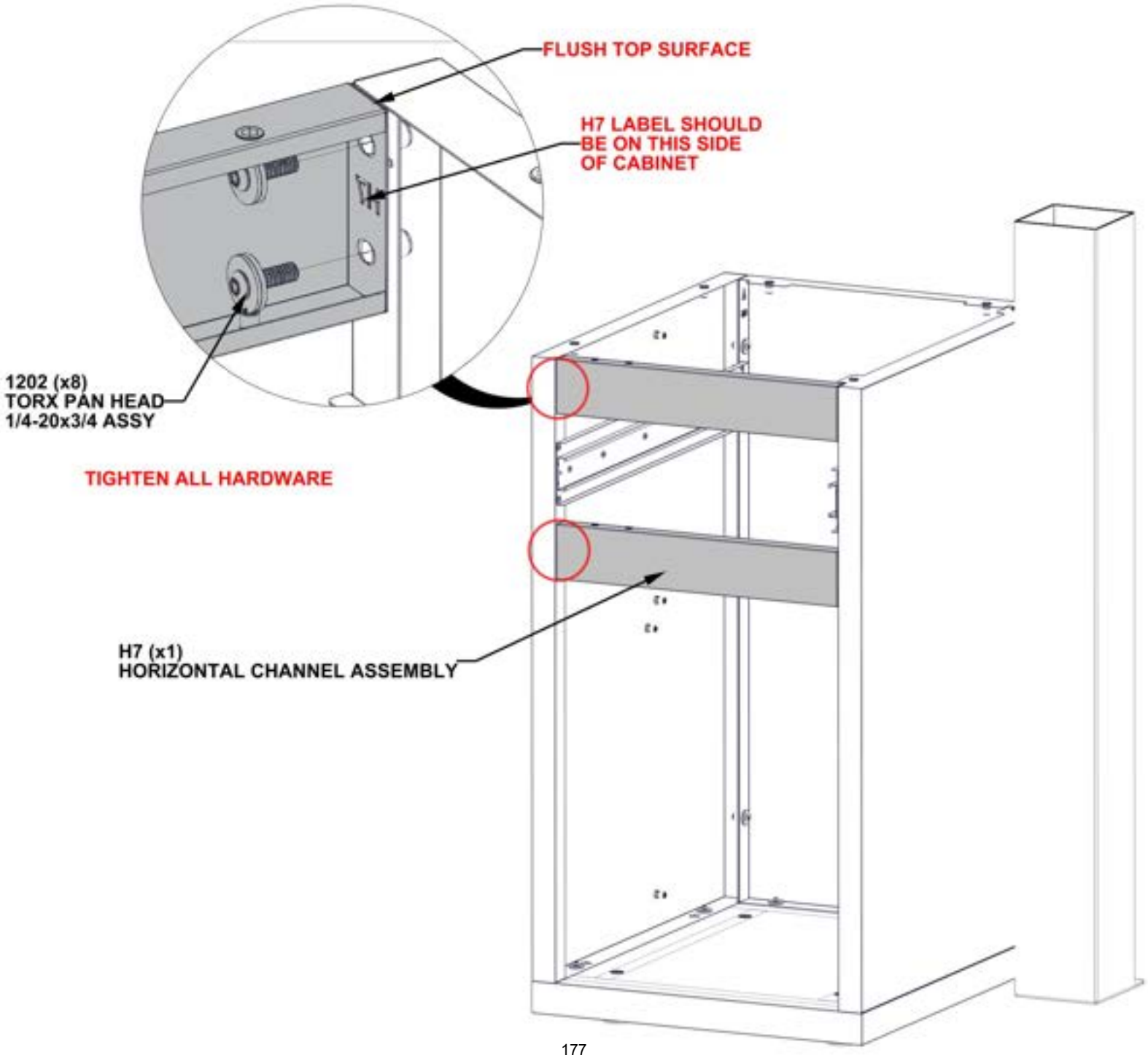

STEP 118 - BAR CABINET ASSEMBLY



A2 MAGNET BRACKET - A4M03026
(x1) 1"x1 1/4"x3 1/8" (25x31x80)

Qty	PartNo	Description
2	H101289	PAN HEAD SCREW 8-32x1/2" SS

- ONLY BAR CABINET IS SHOWN FOR DETAIL.

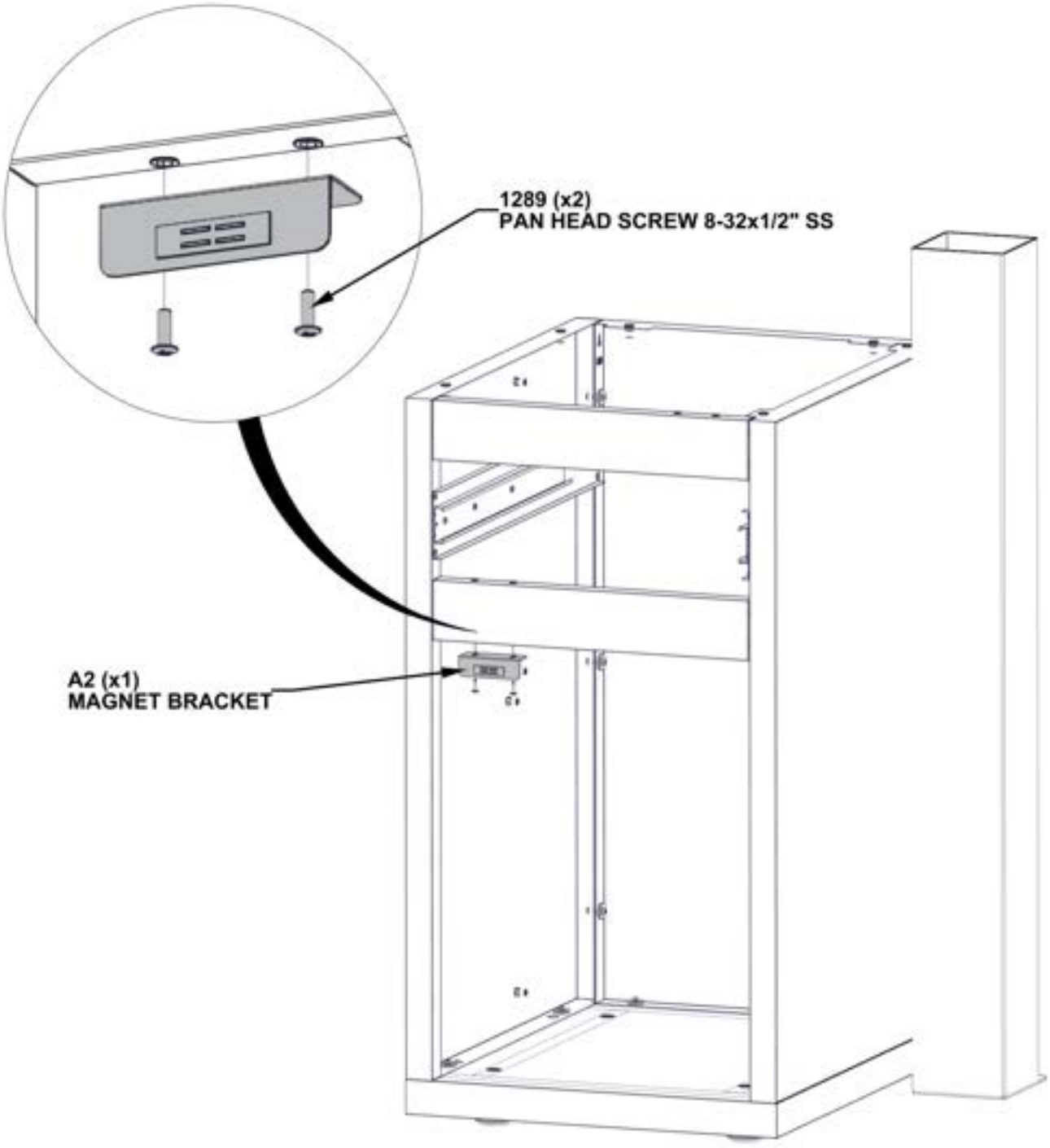

STEP 119 - BAR CABINET ASSEMBLY

Qty	PartNo	Description
6	H101202	TORX PAN HEAD 1/4-20x3/4 ASSY



H6 TUBE FRAME SUPPORT - A4M03627
(x1) 35 15/16"x15 9/16"x1 15/16" (50x394.5x912.5)



G6 BACK PANEL - A4M03631
(x1) 34"x27 3/4"x1" (25x705x864)

- ONLY BAR CABINET IS SHOWN FOR DETAIL.
- EACH TUBE FRAME SUPPORT HAS FACTORY INSTALLED ADJUSTABLE FEET.
- ADJUST EACH FOOT UNTIL FRAME IS LEVEL.
- MAKE SURE THE TUBE FRAME IS ORIENTED CORRECTLY BASED ON THE TWO THREADED INSERTS ON BACKSIDE OF TUBE.

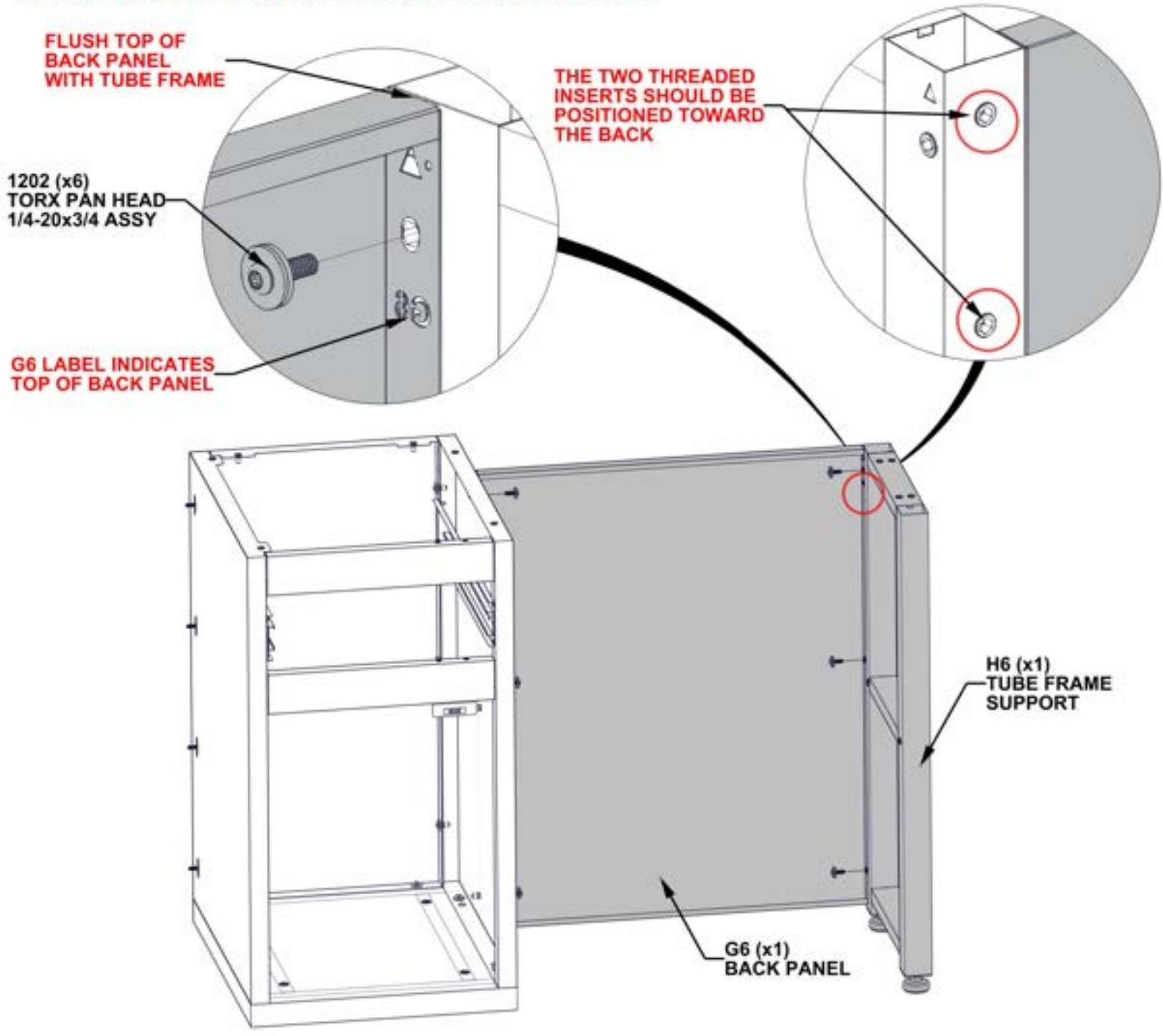

STEP 120 - BAR CABINET ASSEMBLY

Qty	PartNo	Description
6	H101202	TORX PAN HEAD 1/4-20x3/4 ASSY



H6 TUBE FRAME SUPPORT - A4M03627
(x1) 35 15/16"x15 9/16"x1 15/16" (50x394.5x912.5)



G6 BACK PANEL - A4M03631
(x1) 34"x27 3/4"x1" (25x705x864)

- ONLY BAR CABINET IS SHOWN FOR DETAIL.
- EACH TUBE FRAME SUPPORT HAS FACTORY INSTALLED ADJUSTABLE FEET.
- ADJUST EACH FOOT UNTIL FRAME IS LEVEL.
- MAKE SURE THE TUBE FRAME IS ORIENTED CORRECTLY BASED ON THE TWO THREADED INSERTS ON BACKSIDE OF TUBE.

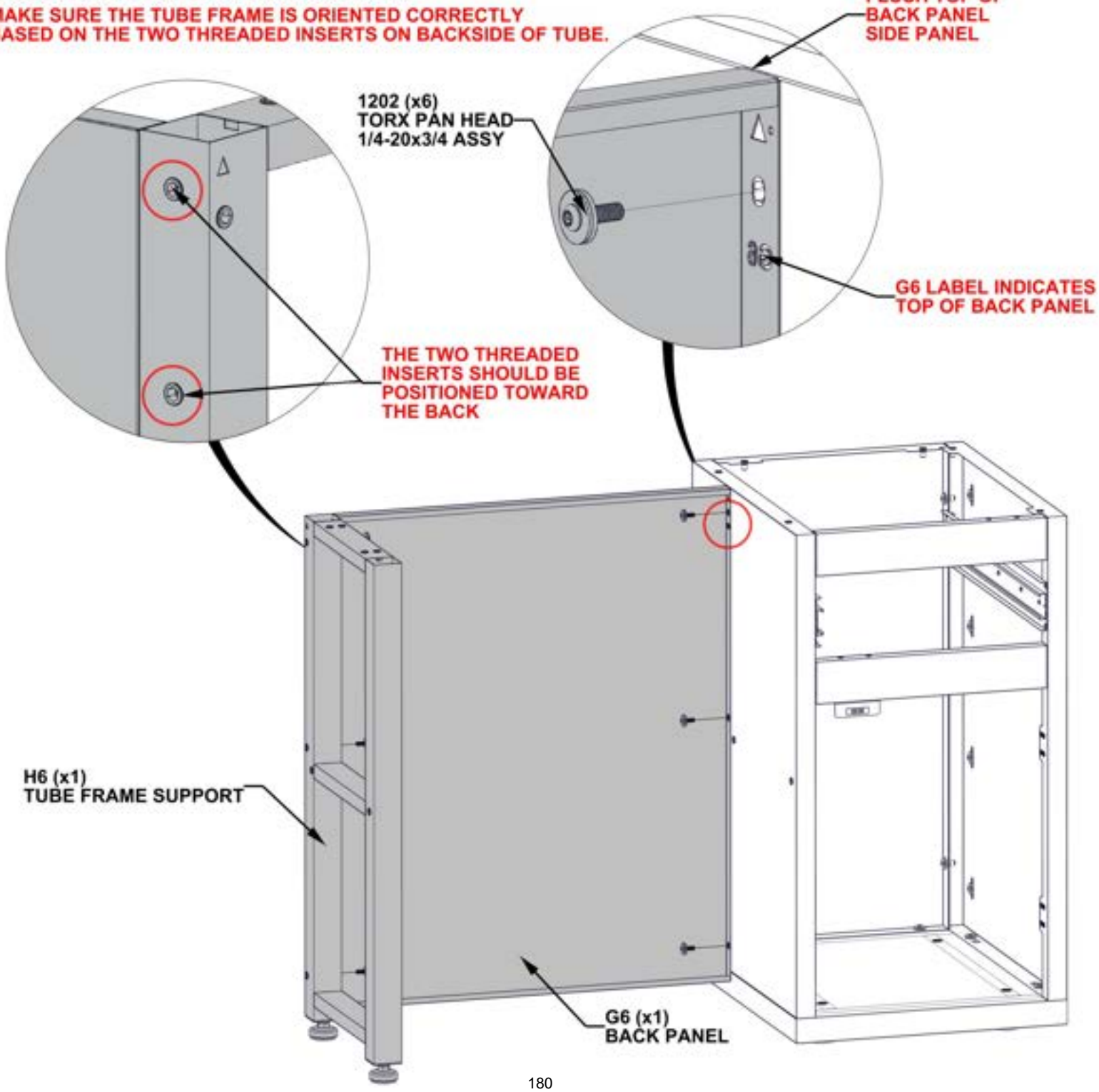

STEP 121 - BAR CABINET ASSEMBLY



G7 BACK PANEL - A4M03629
(x1) 45 7/8"x34"x1" (25x864x1166)

Qty	PartNo	Description
6	H101202	TORX PAN HEAD 1/4-20x3/4 ASSY

- ONLY BAR CABINET IS SHOWN FOR DETAIL.

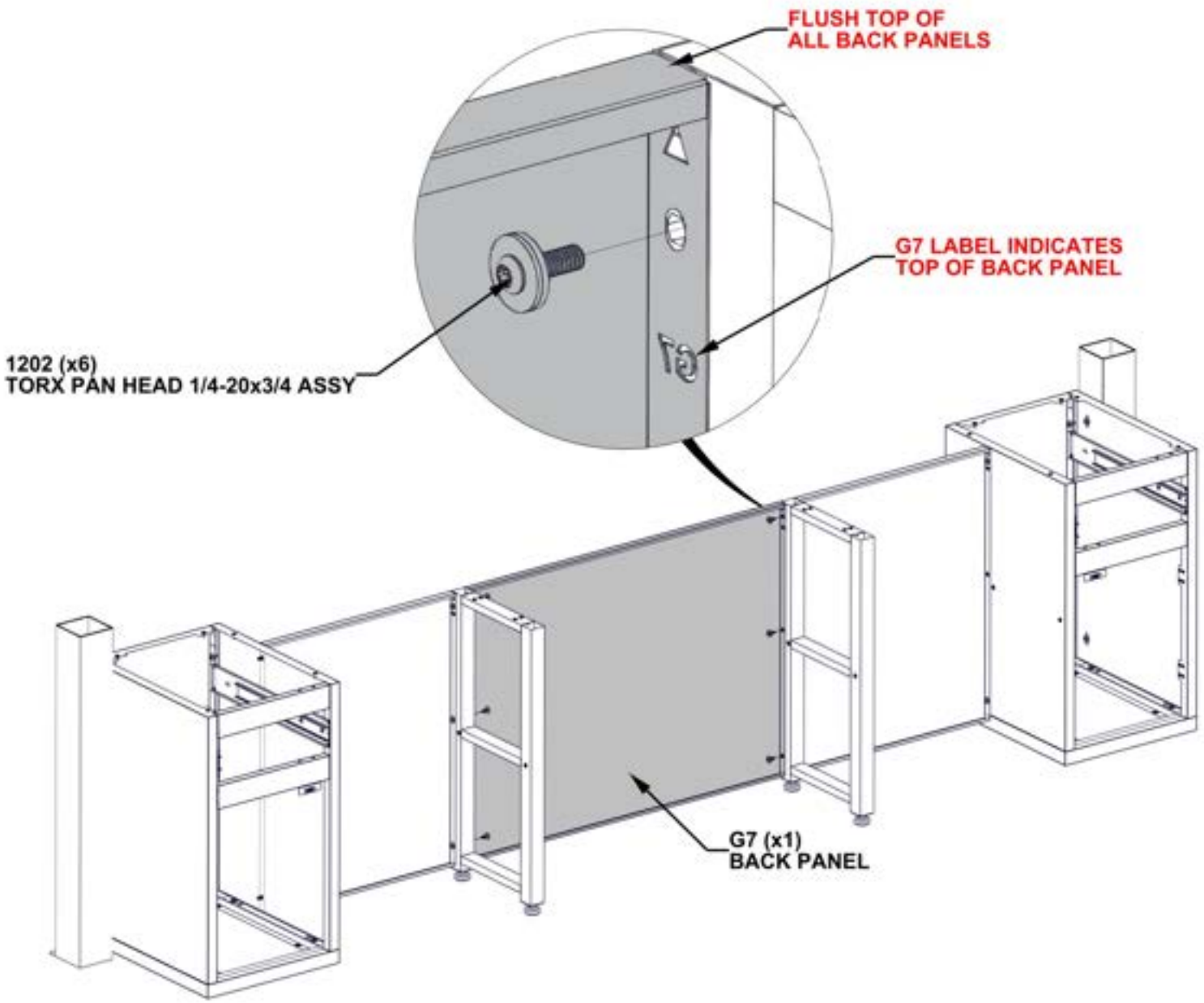

STEP 122 - BAR CABINET ASSEMBLY

Qty	PartNo	Description
8	H101202	TORX PAN HEAD 1/4-20x3/4 ASSY



L4 SHELF ASSEMBLY - A4M03644
(x2) 27 3/4"x15 7/16"1" (25x392.2x705)

- ONLY BAR CABINET IS SHOWN FOR DETAIL.

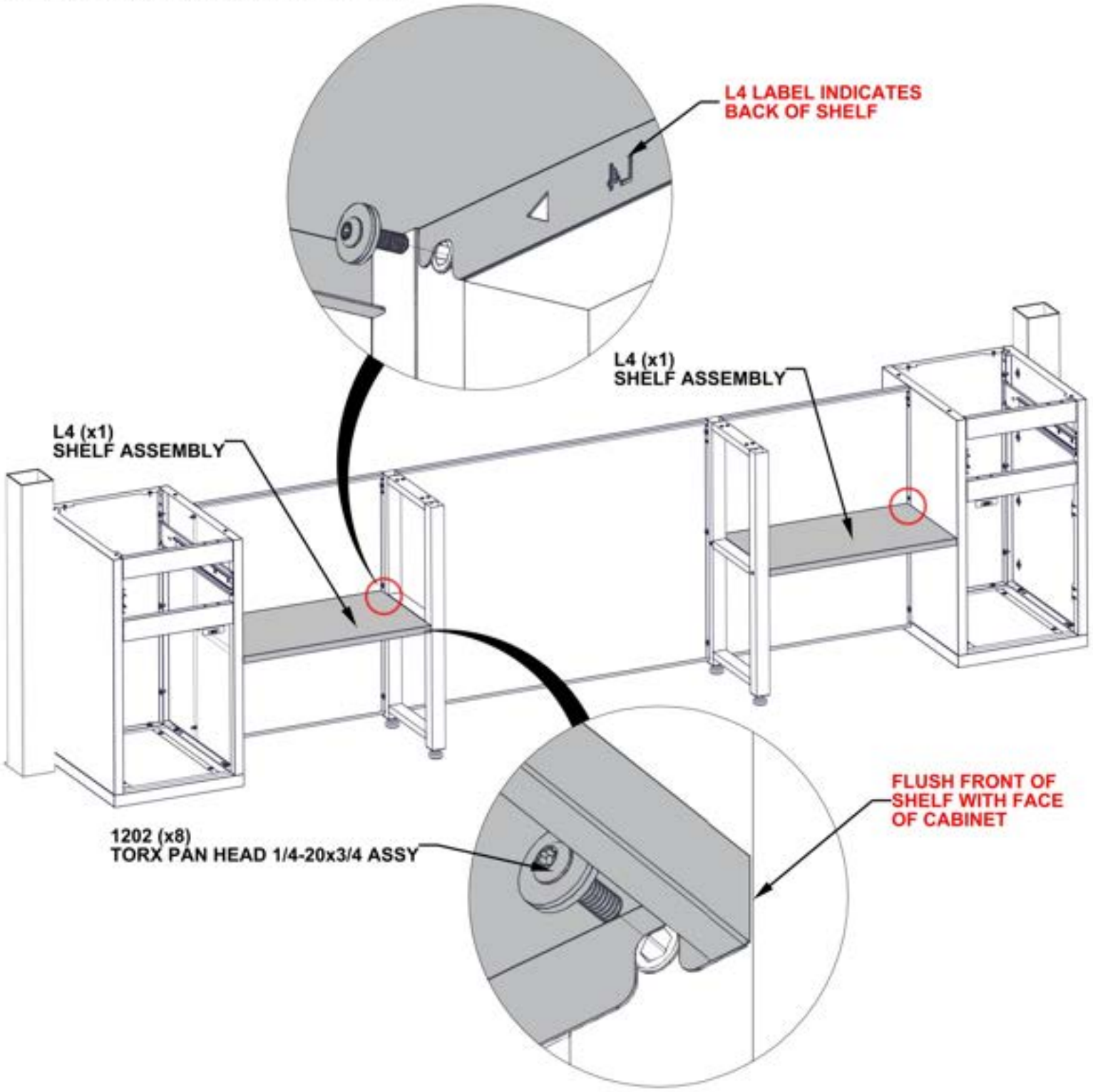

STEP 123 - BAR CABINET ASSEMBLY



L3 SHELF ASSEMBLY M - A4M03645
(x1) 45 7/8"x15 7/16"x1" (25x392.2x1166)

Qty	PartNo	Description
4	H101202	TORX PAN HEAD 1/4-20x3/4 ASSY

- ONLY BAR CABINET IS SHOWN FOR DETAIL.

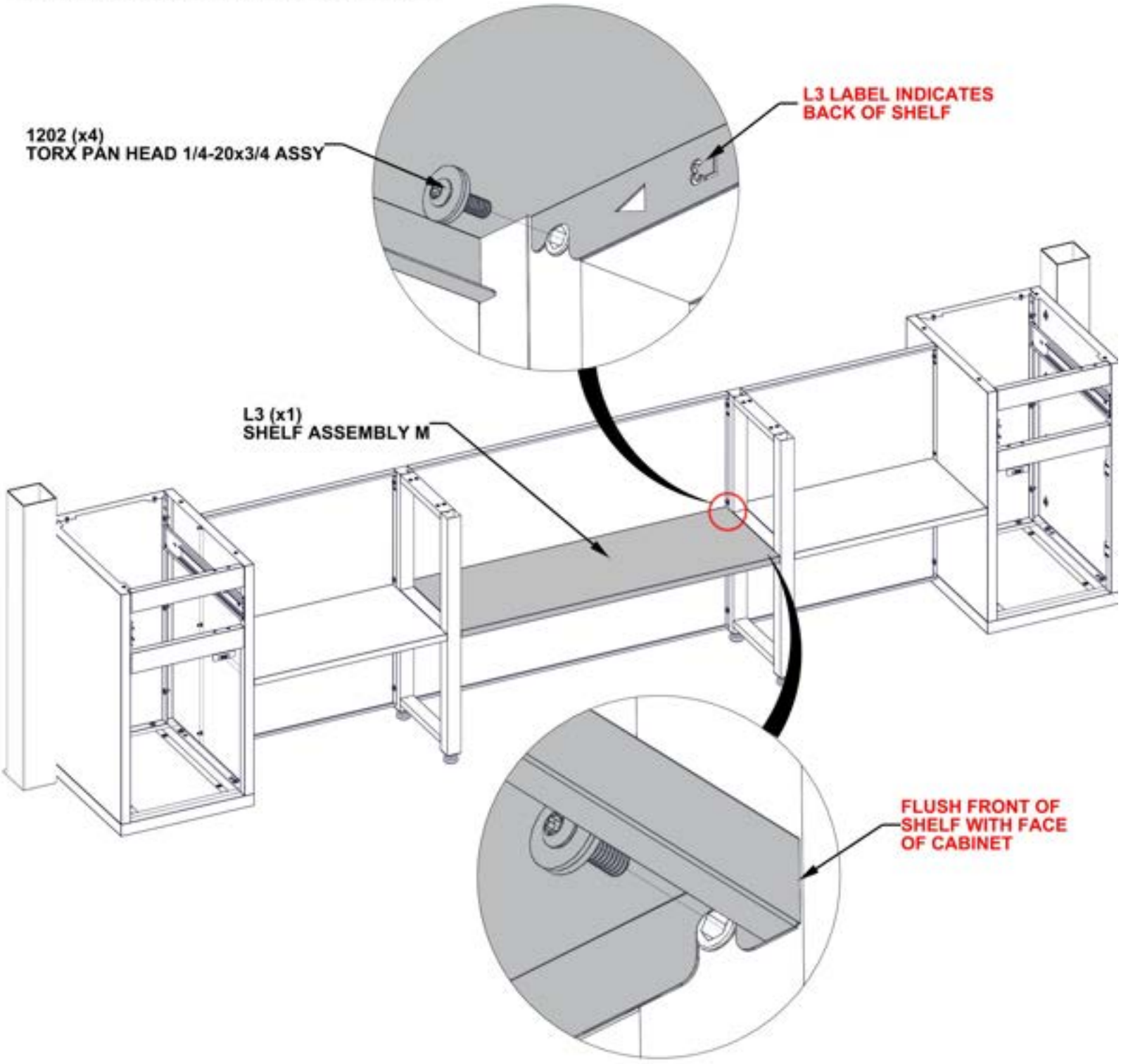

STEP 124 - BAR CABINET ASSEMBLY

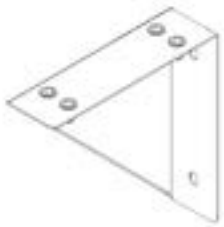

A1 TABLE BRACKET ASSEMBLY - A4M03634
(x2) 6 15/16"x6 15/16"x1 15/16" (50x176x176)

Qty	PartNo	Description
4	H101202	TORX PAN HEAD 1/4-20x3/4 ASSY

- ONLY BAR CABINET IS SHOWN FOR DETAIL.

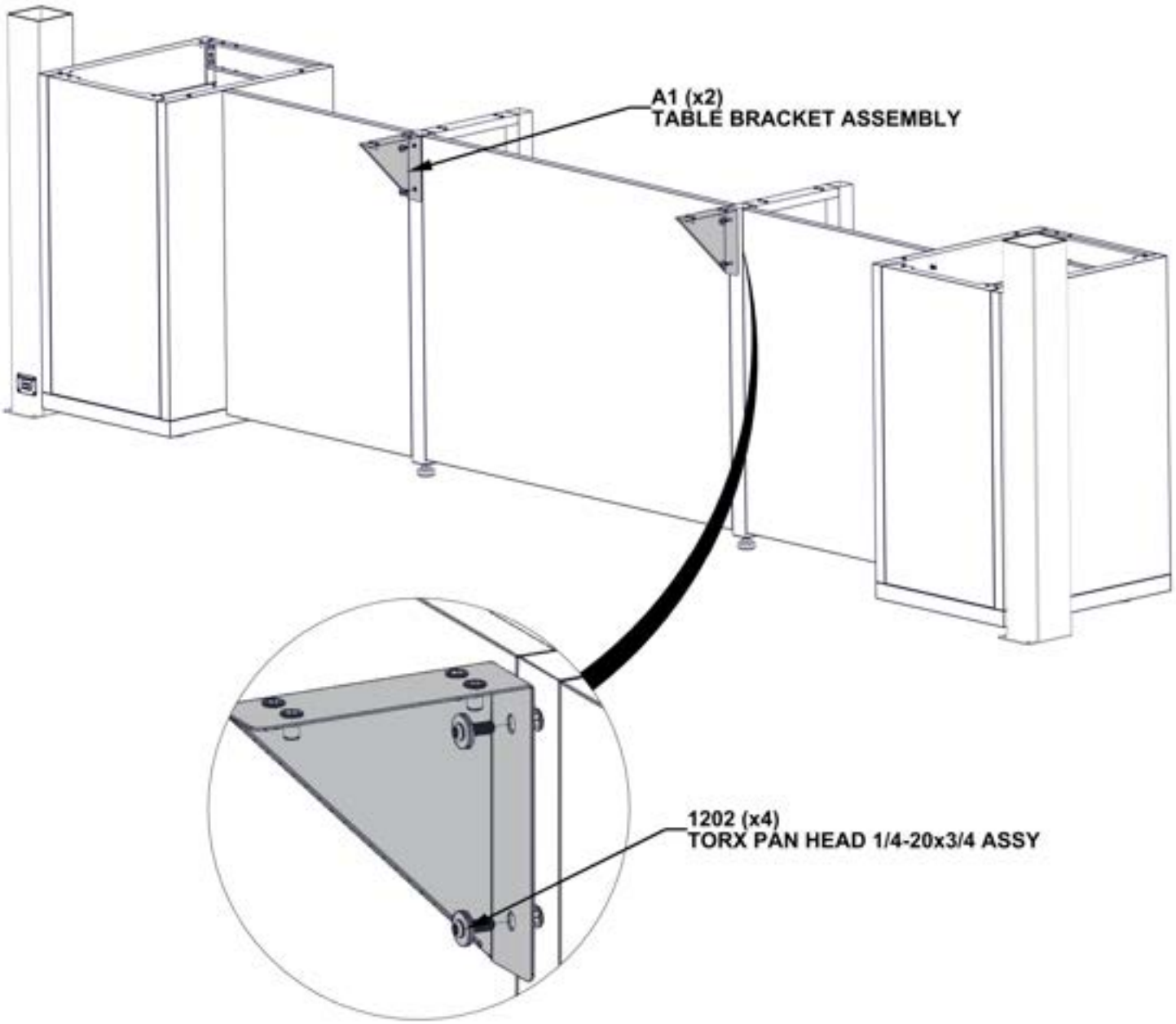

STEP 125 - BAR CABINET ASSEMBLY



T6 TABLETOP PANEL ASSEMBLY - A4M03615
(x1) 47 3/16"x23 3/8"x1 1/4" (32x593x1199)

Qty	PartNo	Description
10	H101103	TORX SOCKET SCREW 1/4-20

- ONLY BAR CABINET IS SHOWN FOR DETAIL.
- SQUARE ALL SIDES OF CABINET BEFORE TIGHTENING HARDWARE.

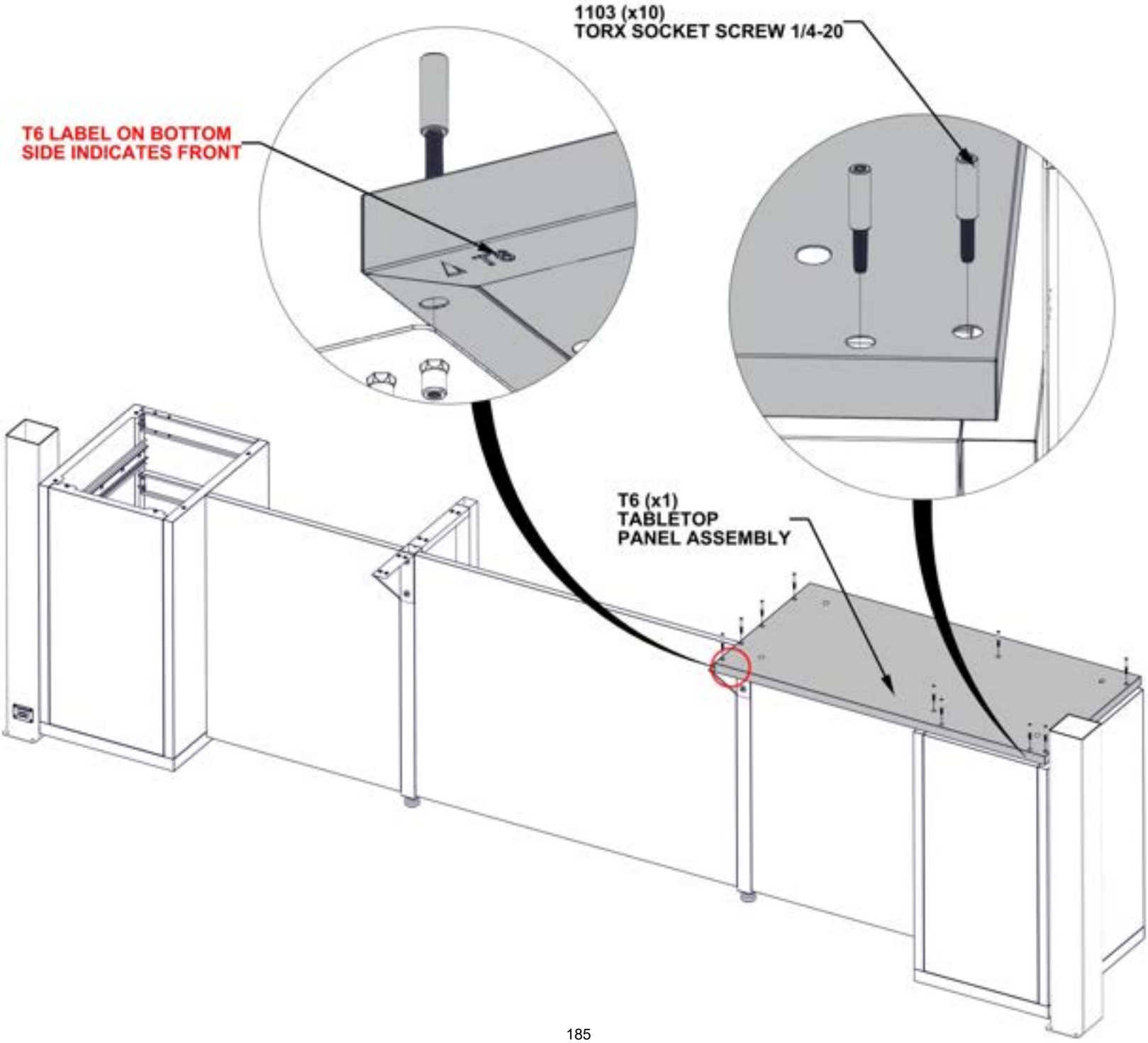

STEP 126 - BAR CABINET ASSEMBLY



T8 TABLETOP PANEL - A4M03625
(x1) 47 7/8"x23 3/8"x1 1/4" (32x593x1216)

Qty	PartNo	Description
8	H101103	TORX SOCKET SCREW 1/4-20

- ONLY BAR CABINET IS SHOWN FOR DETAIL.
- SQUARE ALL SIDES OF CABINET BEFORE TIGHTENING HARDWARE.

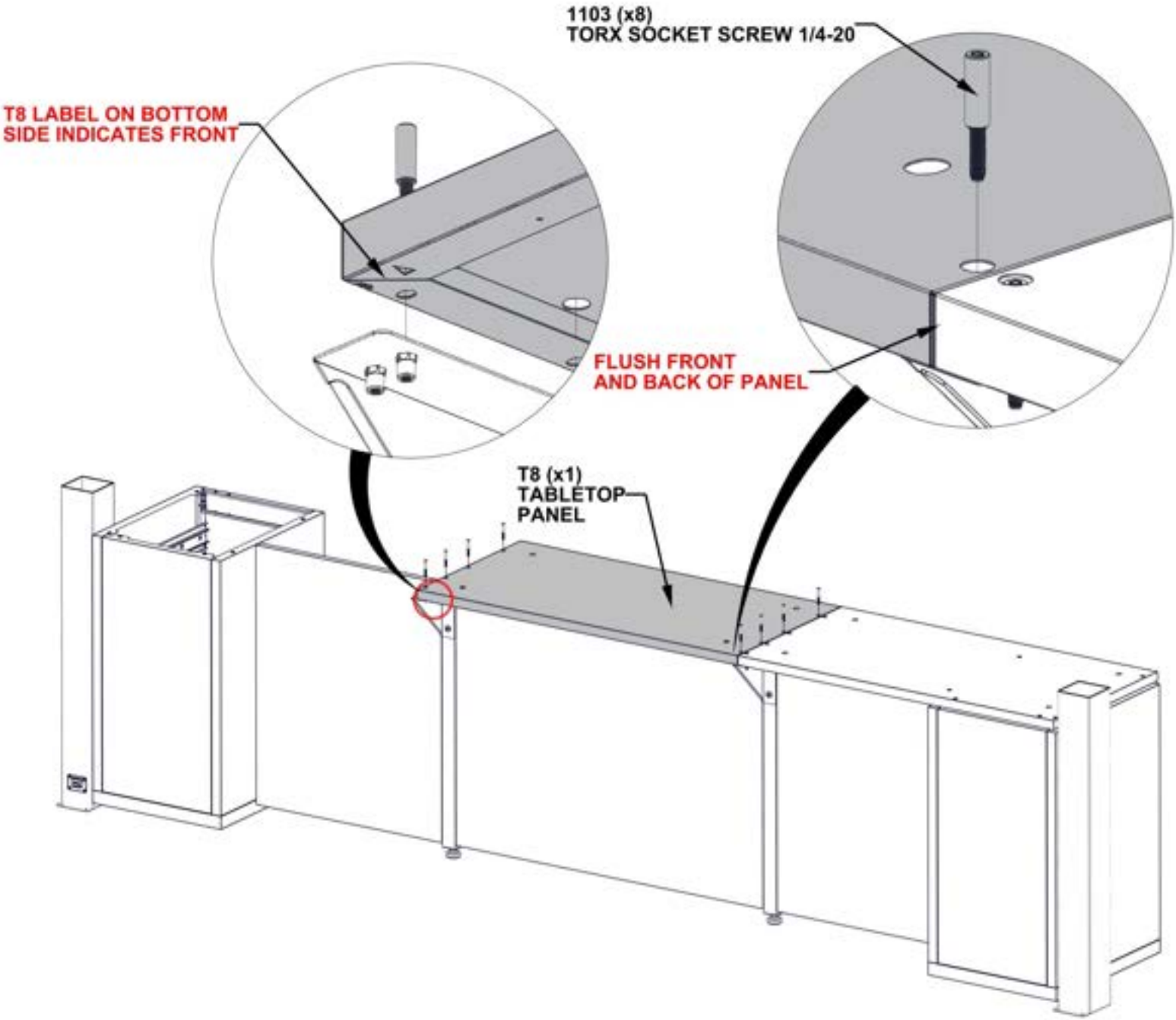

STEP 127 - BAR CABINET ASSEMBLY



T9 TABLETOP PANEL ASSEMBLY - A4M03639
(x1) 47 3/16"x23 3/8"x1 1/4"1 1/4" (32x593x1199)

Qty	PartNo	Description
10	H101103	TORX SOCKET SCREW 1/4-20

- ONLY BAR CABINET IS SHOWN FOR DETAIL.
- SQUARE ALL SIDES OF CABINET BEFORE TIGHTENING HARDWARE.

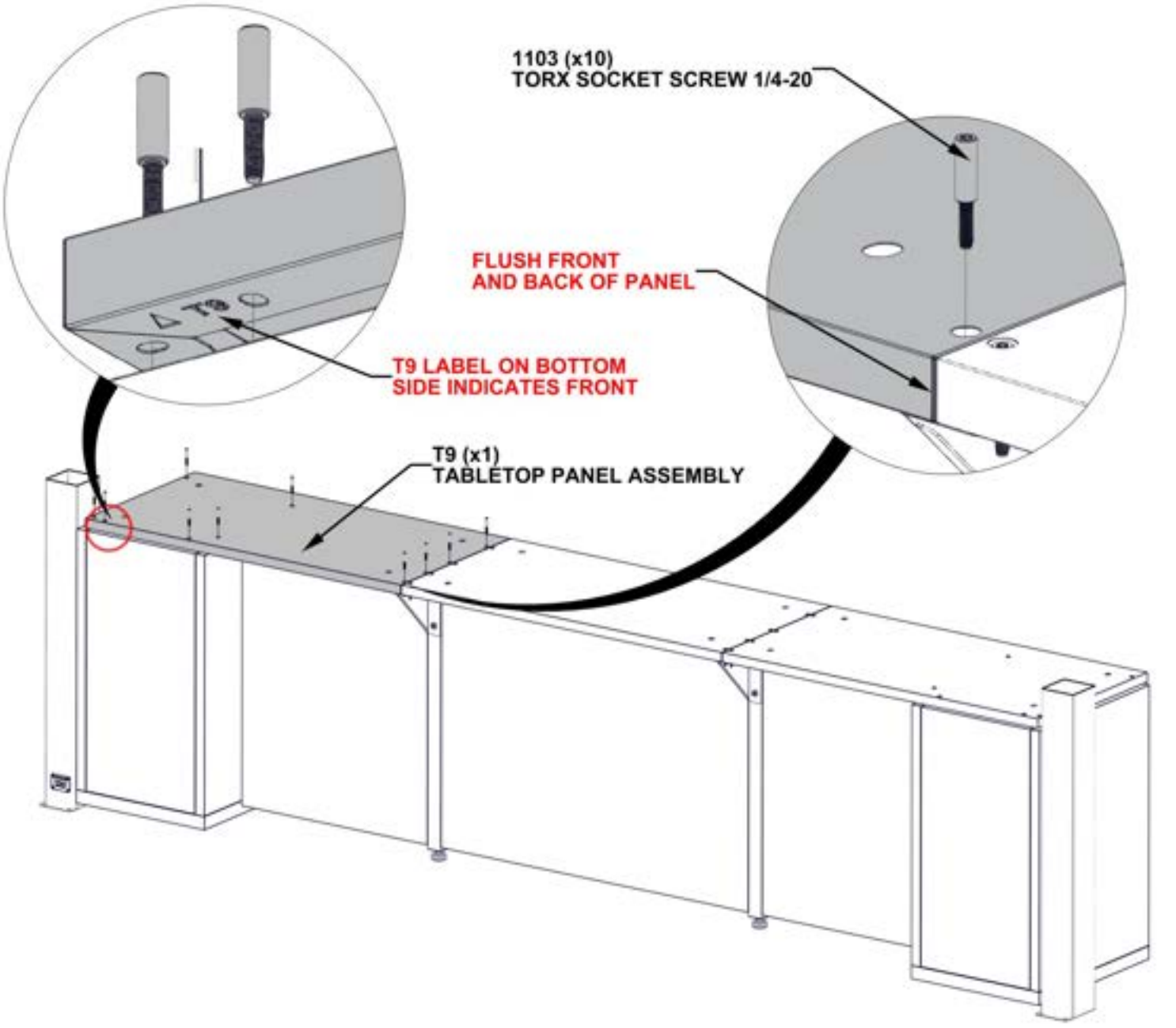

STEP 128A - BAR CABINET MARBLE INSTALLATION

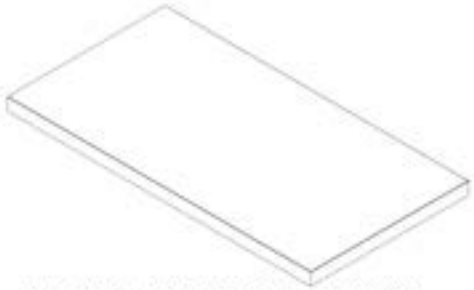

M4 BAR TABLE MARBLE - A4M03616
(x1) 47 15/16"x24 15/16"x1 15/16" (50x634x1218)

- ONLY BAR CABINETS ARE SHOWN FOR DETAIL.
- IT IS RECOMMENDED TO HAVE AT LEAST TWO PEOPLE SET MARBLE COUNTERTOP IN PLACE.
- SLIDE IN PLACE UNTIL MARBLE IS TIGHT AGAINST POST AND SIDES ARE FLUSH WITH PANEL.
- WHEN SETTING MARBLE IN PLACE, MAKE SURE YOUR FINGERS ARE CLEAR AND NOT UNDERNEATH MARBLE.

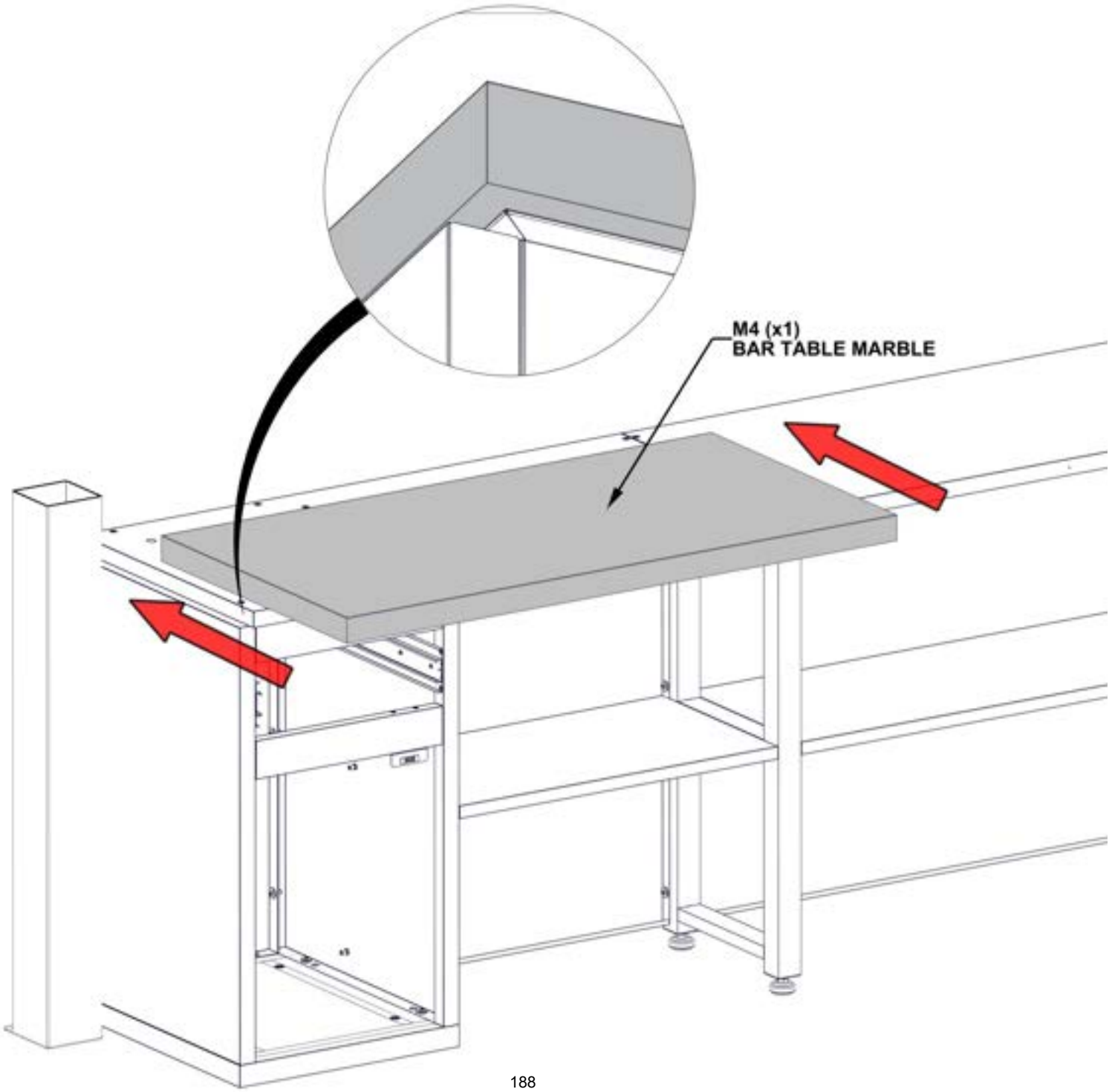

STEP 128B - BAR CABINET MARBLE INSTALLATION

Qty	PartNo	Description
4	H101292	TORX PAN HEAD 1/4-20x13/32"
4	H101053	STEEL WASHER 6x20
4	H101054	SEALANT WASHER

- ONLY BAR CABINETS ARE SHOWN FOR DETAIL.
- MAKE SURE YOU ARE USING THE CORRECT HARDWARE FOR THIS STEP.
- ONCE MARBLE IS IN PLACE, IT IS RECOMMENDED TO COVER WITH A PIECE OF CARDBOARD OR FOAM UNTIL ASSEMBLY IS FINISHED TO PREVENT DAMAGE.
- DO NOT USE MARBLE SURFACE AS A WORK BENCH.

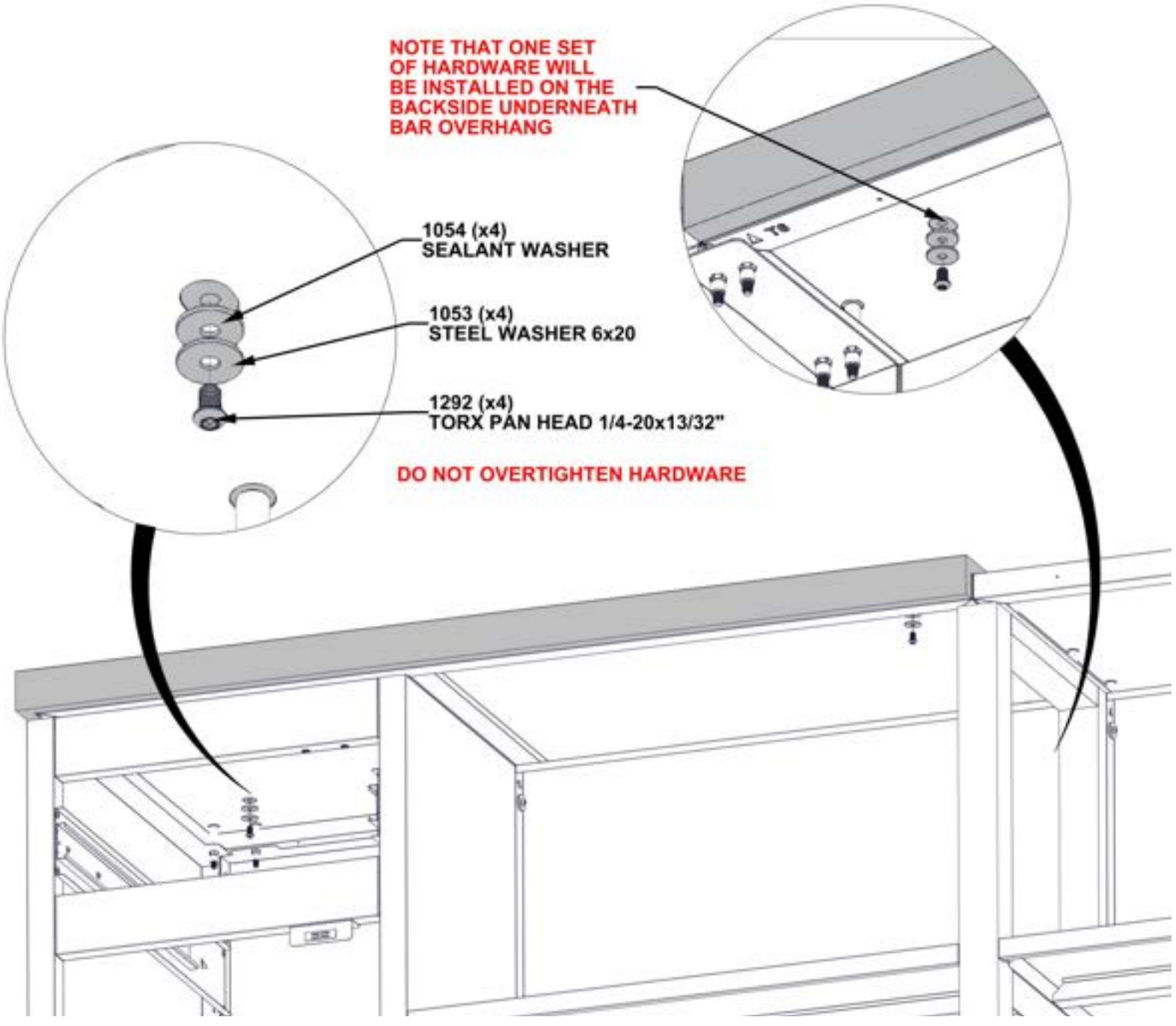

STEP 129A - BAR CABINET MARBLE INSTALLATION



M6 BAR TABLE MARBLE - A4M03633
(x1) 47 7/8"x24 7/8"x1 15/16" (49x632x1216)

- ONLY BAR CABINETS ARE SHOWN FOR DETAIL.
- IT IS RECOMMENDED TO HAVE AT LEAST TWO PEOPLE SET MARBLE COUNTERTOP IN PLACE.
- SLIDE IN PLACE UNTIL MARBLE PIECES ARE TIGHT AGAINST ONE ANOTHER.
- WHEN SETTING MARBLE IN PLACE, MAKE SURE YOUR FINGERS ARE CLEAR AND NOT UNDERNEATH MARBLE.

STEP 129B - BAR CABINET MARBLE INSTALLATION

Qty	PartNo	Description
4	H101292	TORX PAN HEAD 1/4-20x13/32"
4	H101053	STEEL WASHER 6x20
4	H101054	SEALANT WASHER

- ONLY BAR CABINETS ARE SHOWN FOR DETAIL.
- MAKE SURE YOU ARE USING THE CORRECT HARDWARE FOR THIS STEP.
- ONCE MARBLE IS IN PLACE, IT IS RECOMMENDED TO COVER WITH A PIECE OF CARDBOARD OR FOAM UNTIL ASSEMBLY IS FINISHED TO PREVENT DAMAGE.
- DO NOT USE MARBLE SURFACE AS A WORK BENCH.

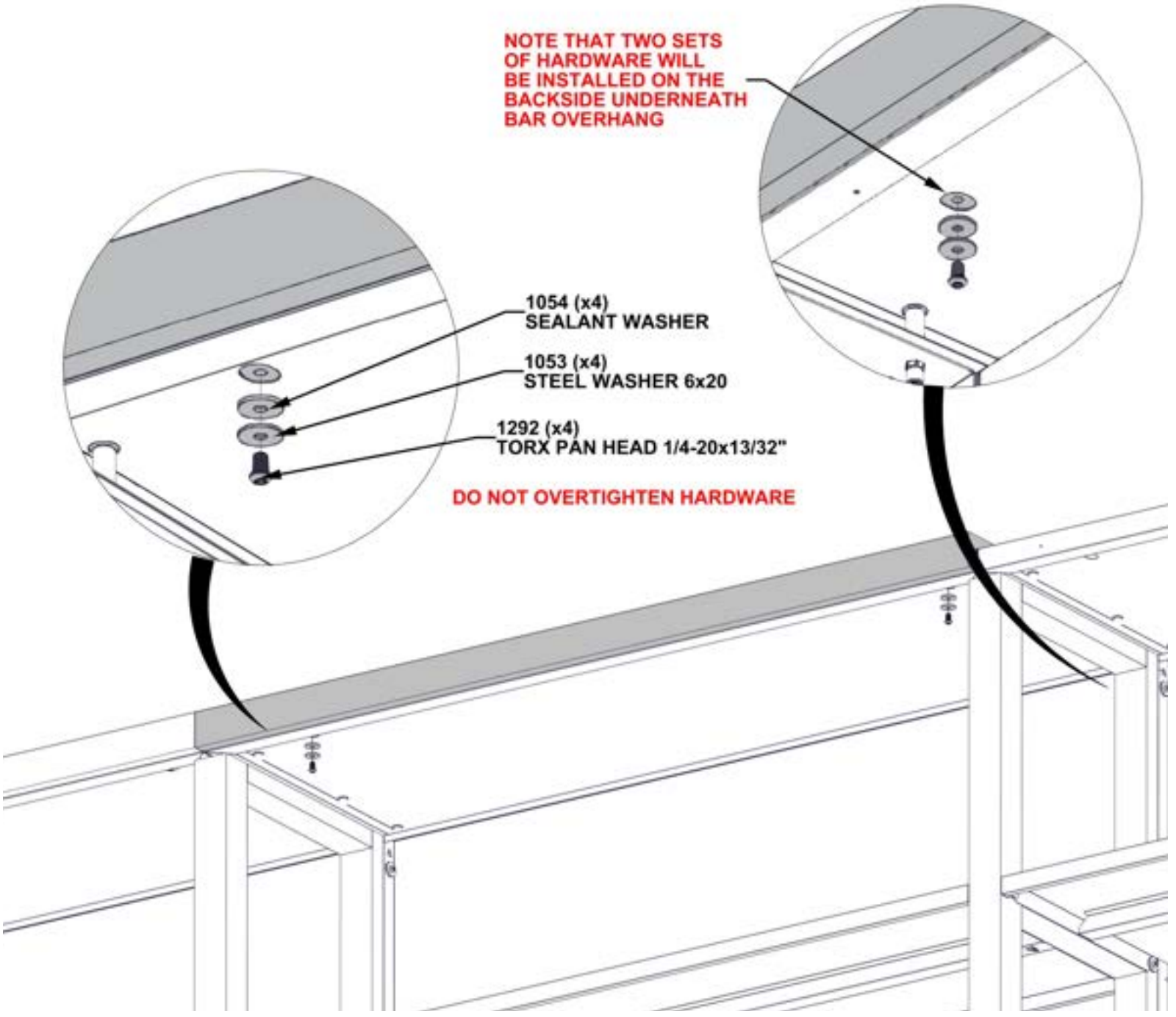

STEP 130A - BAR CABINET MARBLE INSTALLATION

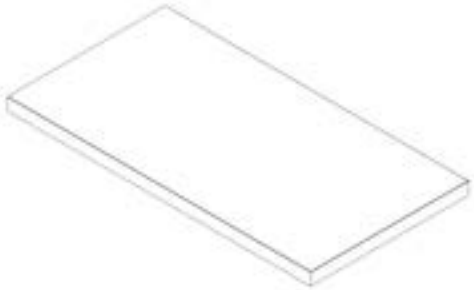

M4 BAR TABLE MARBLE - A4M03616
(x1) 47 15/16"x24 15/16"x1 15/16" (50x634x1218)

- ONLY BAR CABINETS ARE SHOWN FOR DETAIL.
- IT IS RECOMMENDED TO HAVE AT LEAST TWO PEOPLE SET MARBLE COUNTERTOP IN PLACE.
- SLIDE IN PLACE UNTIL MARBLE PIECES ARE TIGHT AGAINST ONE ANOTHER AND AGAINST POST.
- WHEN SETTING MARBLE IN PLACE, MAKE SURE YOUR FINGERS ARE CLEAR AND NOT UNDERNEATH MARBLE.

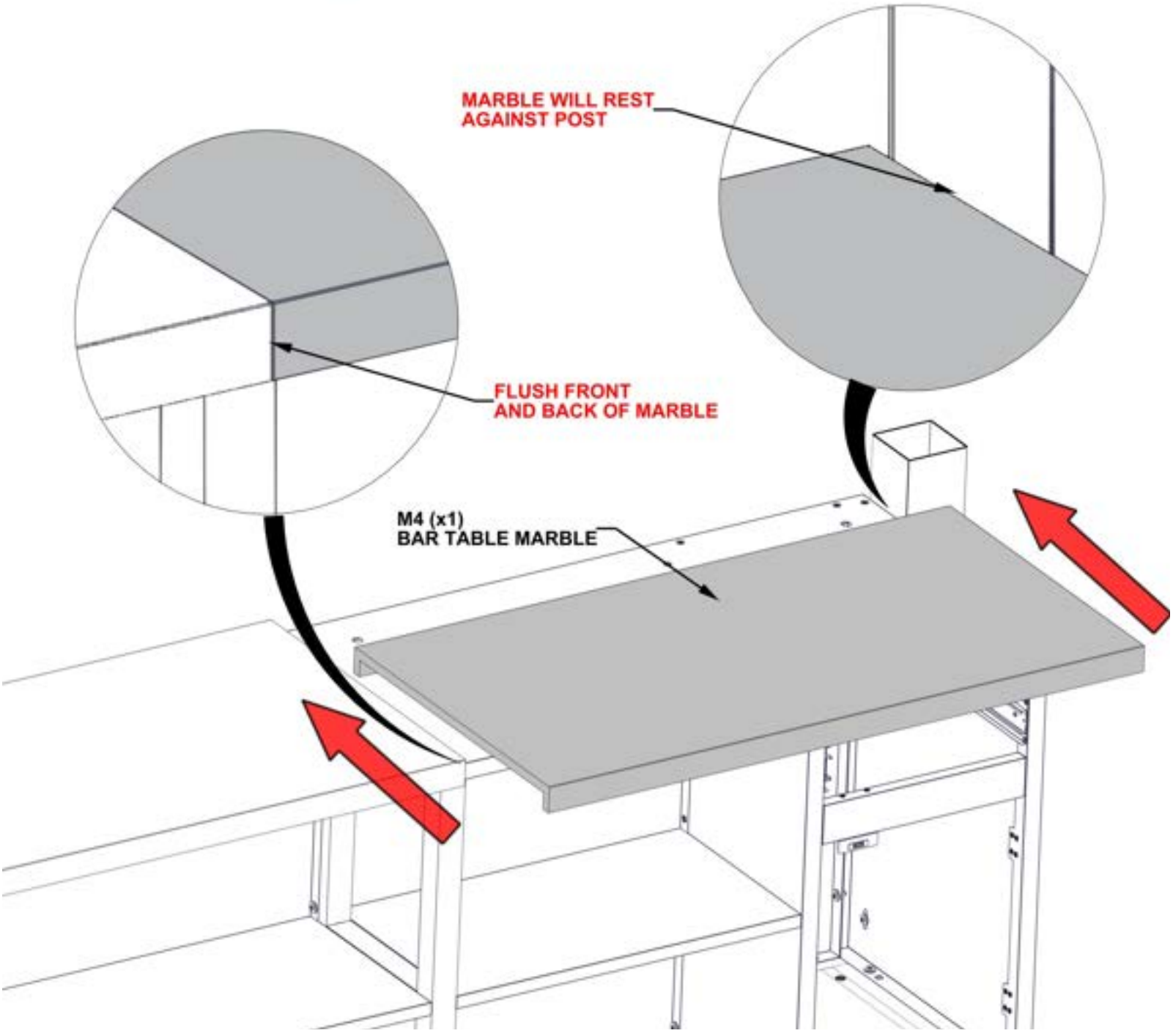

STEP 130B - BAR CABINET MARBLE INSTALLATION

Qty	PartNo	Description
4	H101292	TORX PAN HEAD 1/4-20x13/32"
4	H101053	STEEL WASHER 6x20
4	H101054	SEALANT WASHER

- ONLY BAR CABINETS ARE SHOWN FOR DETAIL.
- MAKE SURE YOU ARE USING THE CORRECT HARDWARE FOR THIS STEP.
- ONCE MARBLE IS IN PLACE, IT IS RECOMMENDED TO COVER WITH A PIECE OF CARDBOARD OR FOAM UNTIL ASSEMBLY IS FINISHED TO PREVENT DAMAGE.
- DO NOT USE MARBLE SURFACE AS A WORK BENCH.

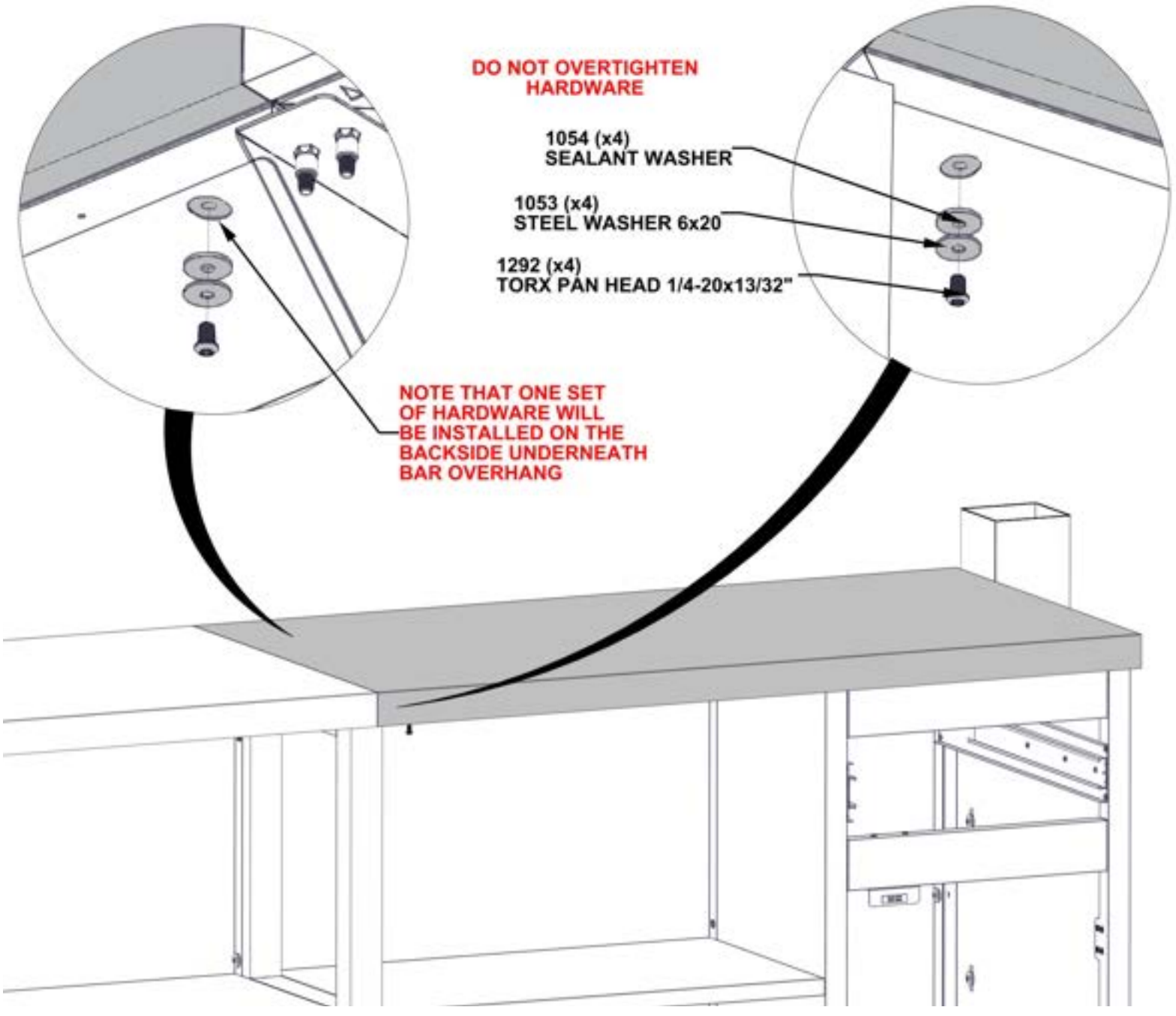

STEP 131A - BAR DRAWER ASSEMBLY

Qty	PartNo	Description
18	H101289	PAN HEAD SCREW 8-32x1/2" SS



D12 DRAWER BODY ASSEMBLY - A4M03621
(x2) 22 1/4"x15 13/16"x4 15/16" (126x402x565)



D11 DRAWER PANEL ASSEMBLY - A4M03619
(x2) 17 13/16"x8 1/16"x15/16" (24x205x452)

- REPEAT THIS STEP TWICE

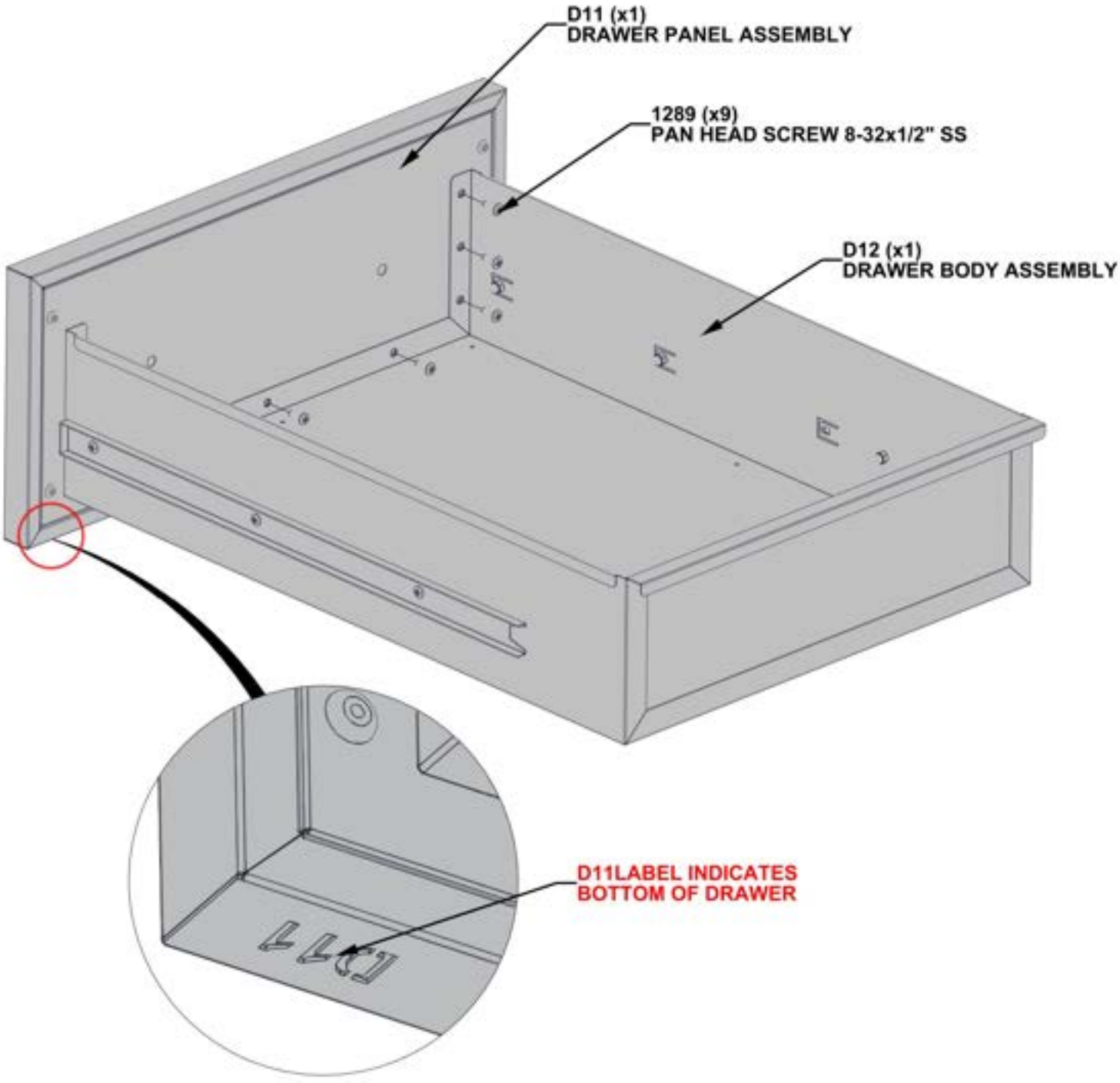

STEP 131B - BAR DRAWER ASSEMBLY



H2 STAINLESS STEEL HANDLE - A4M03024
(x2) 5/8"x1 9/16"x11 13/16" (16x40x300)

Qty	PartNo	Description
4	H101307	SHOULDER BOLT 8-32x30mm SS

- REPEAT THIS STEP TWICE

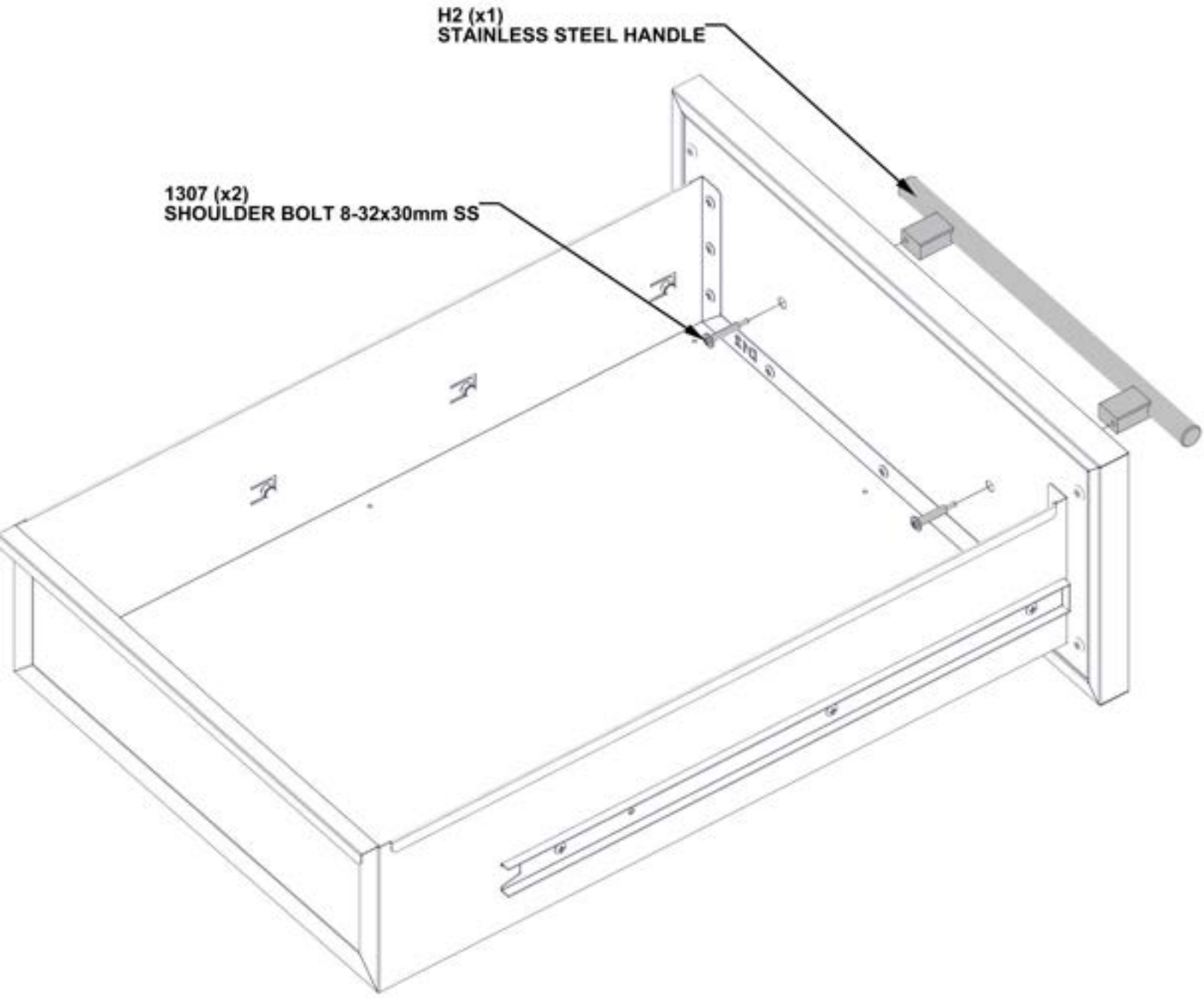

STEP 132 - BAR CABINET ASSEMBLY



DRAWER ASSEMBLY
FROM STEP 131

- ONLY BAR CABINET IS SHOWN FOR DETAIL.
- ATTACH DRAWER ASSEMBLY BY ALIGNING BOTH ENDS OF FACTORY ASSEMBLED DRAWER SLIDES WITH ONE ANOTHER.
- PRESS TOGETHER UNTIL DRAWER SLIDES CONNECT.

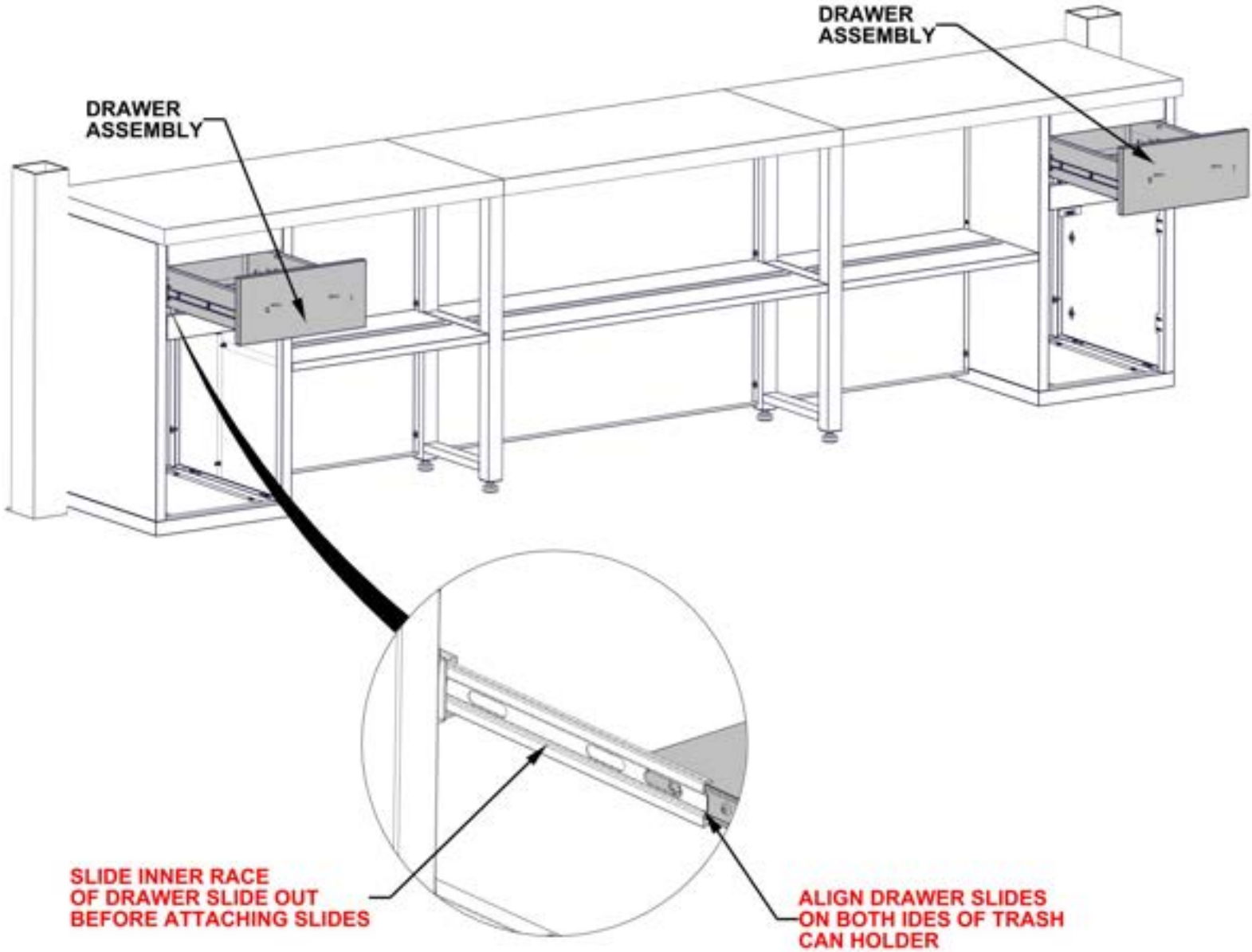

STEP 133A - DOOR ASSEMBLY



D10 DOOR PANEL ASSEMBLY - A4M03617
(x1) 24 3/4"x17 13/16"x15/16" (24x452x628)



D13 DOOR PANEL ASSEMBLY - A4M03643
(x1) 24 3/4"x17 13/16"x15/16" (24x452x628)

Qty	PartNo	Description
8	H101185	PHILLIPS FLAT HEAD 8-32x.5 SCREW



A4M03025 FULL OVERLAY HINGE
(x4)

- INSTALL CABINET HINGES TO THE REMAINING TWO DOORS.

DO NOT OVERTIGHTEN HARDWARE

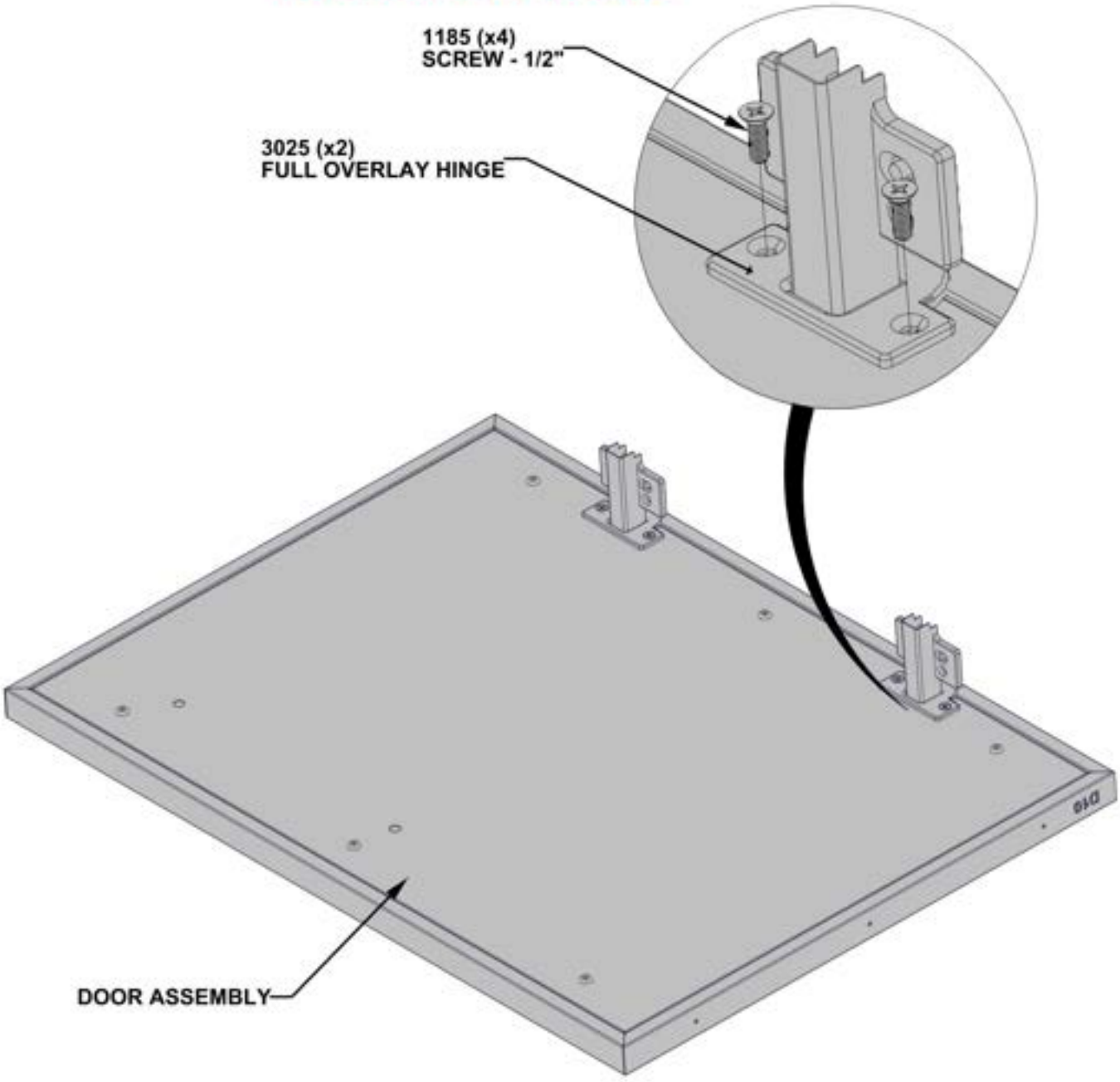

STEP 133B - DOOR ASSEMBLY

Qty	PartNo	Description
4	H101307	SHOULDER BOLT 8-32x30mm SS



H2 STAINLESS STEEL HANDLE - A4M03024
(x2) 5/8"x1 9/16"x11 13/16" (16x40x300)

- INSTALL CABINET HANDLES ON THE TWO DOORS FROM PREVIOUS STEP.

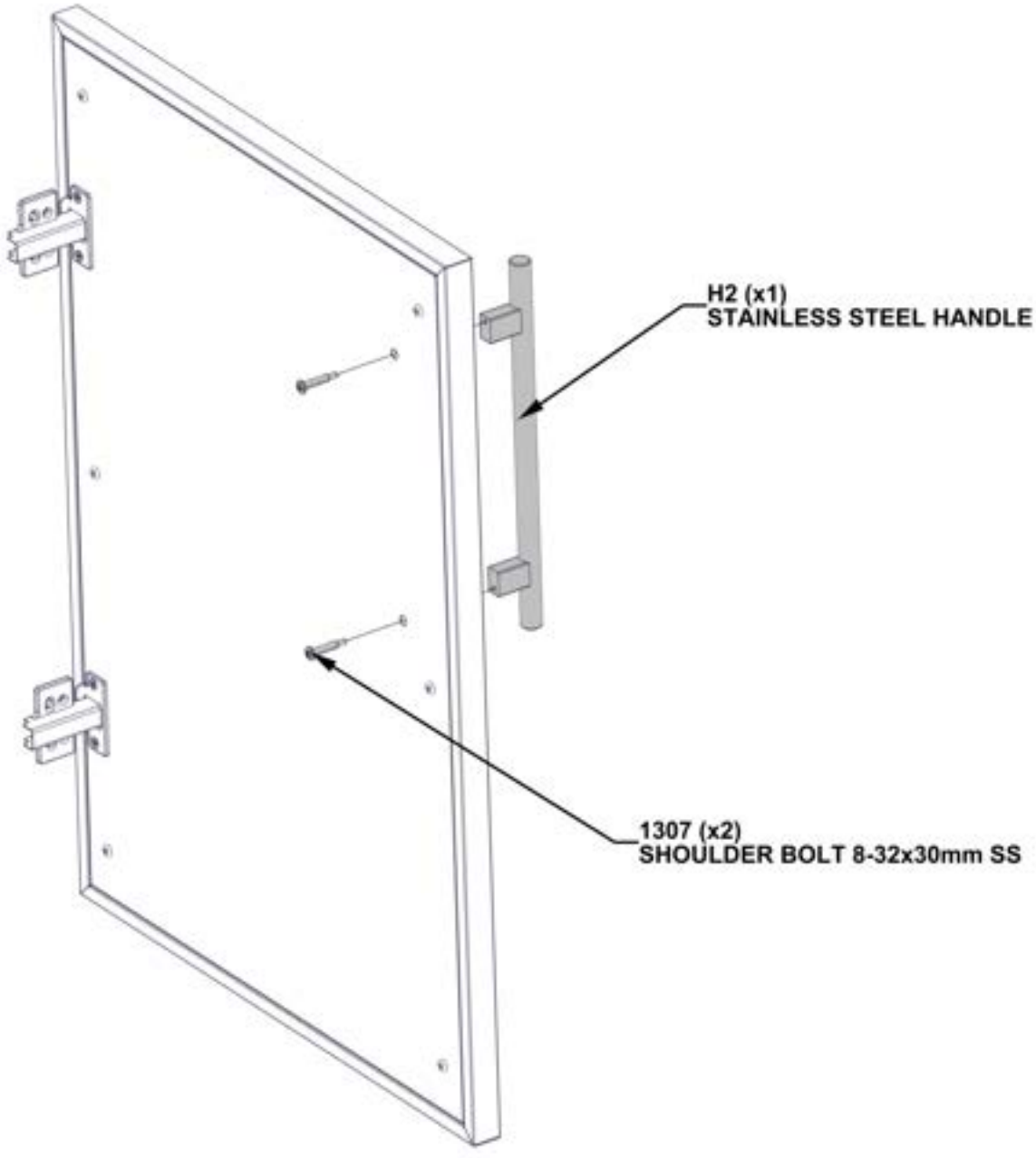

STEP 134 - CABINET DOOR ATTACHMENT



D10 (x1) DOOR PANEL ASSEMBLY - A4M03617
24 3/4"x17 13/16"x15/16" (24x452x628)

Qty	PartNo	Description
8	H101185	PHILLIPS FLAT HEAD 8-32x.5 SCREW

- ONLY BAR CABINET IS SHOWN FOR DETAIL.
- FOR THIS STEP IT IS HELPFUL TO HAVE AN ADDITIONAL PERSON HELP HOLD DOOR IN PLACE.
- WITH CABINET HINGES ATTACHED TO DOOR, ALIGN HOLES IN HINGE BRACKET WITH THREADED INSERTS IN SIDE OF CABINET PANEL.

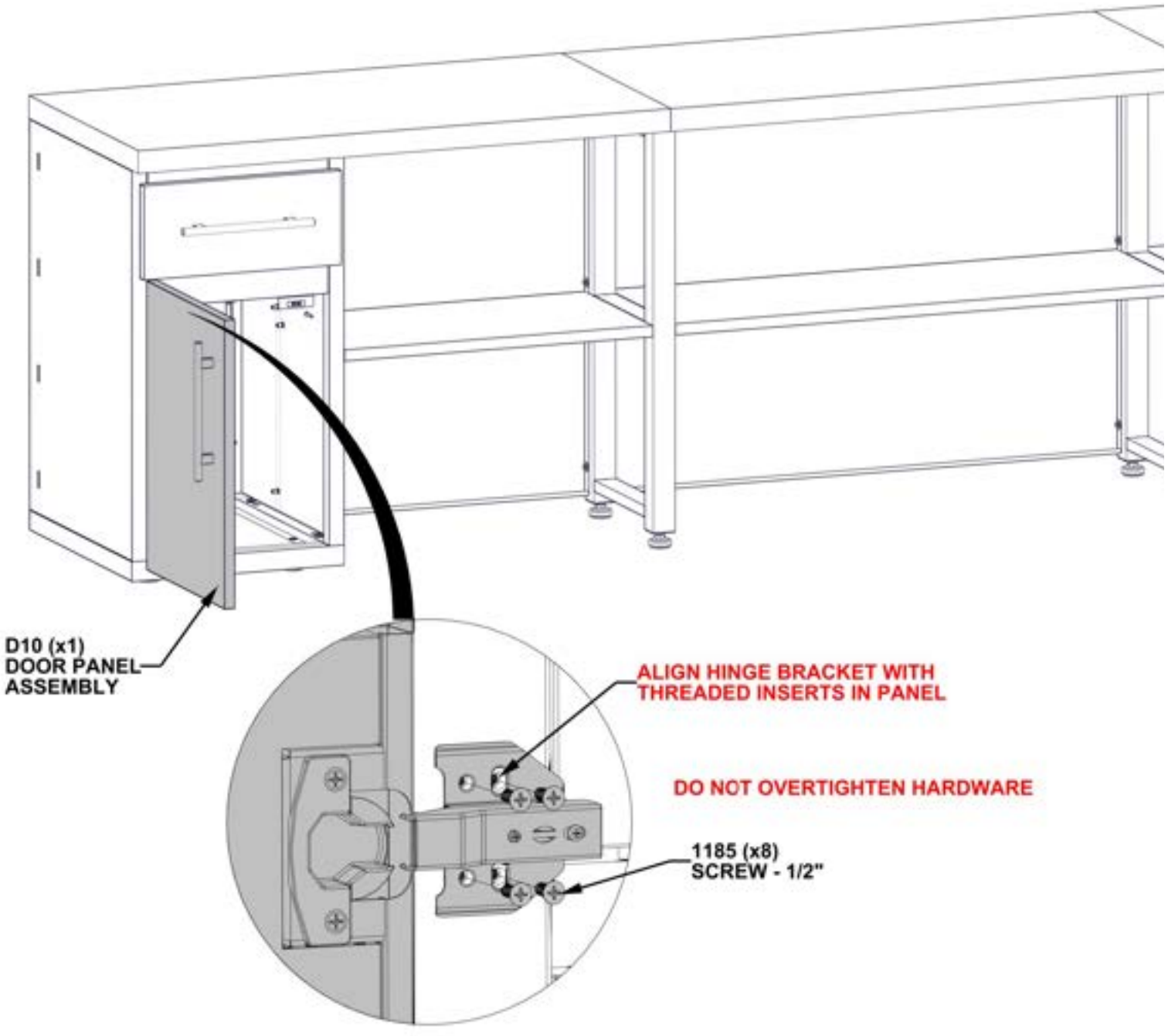

STEP 135 - CABINET DOOR ATTACHMENT



D13 DOOR PANEL ASSEMBLY - A4M03643
(x1) 24 3/4"x17 13/16"x15/16" (24x452x628)

Qty	PartNo	Description
8	H101185	PHILLIPS FLAT HEAD 8-32x.5 SCREW

- ONLY BAR CABINET IS SHOWN FOR DETAIL.
- FOR THIS STEP IT IS HELPFUL TO HAVE AN ADDITIONAL PERSON HELP HOLD DOOR IN PLACE.
- WITH CABINET HINGES ATTACHED TO DOOR, ALIGN HOLES IN HINGE BRACKET WITH THREADED INSERTS IN SIDE OF CABINET PANEL.

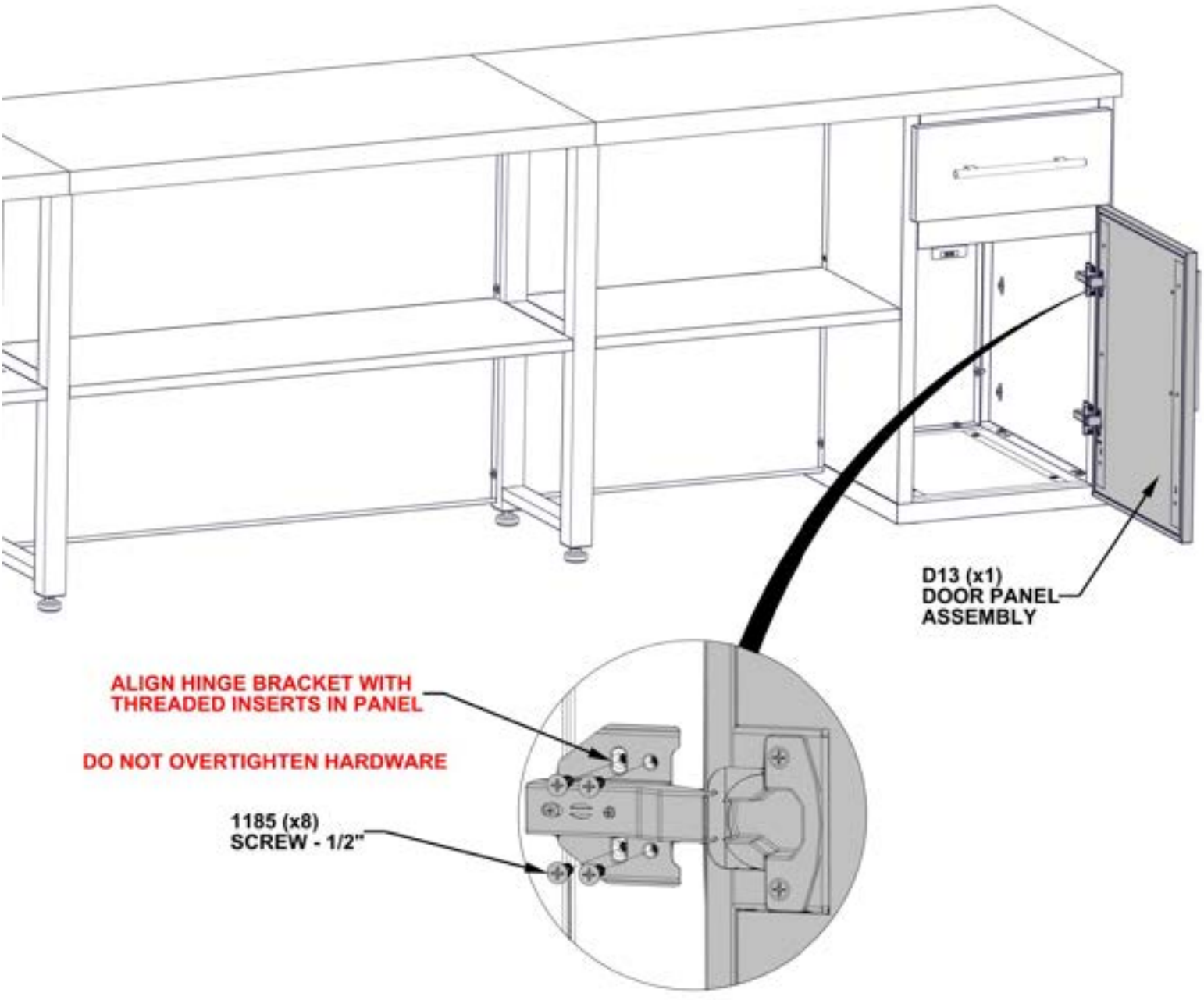

STEP 136 - CABINET DOOR ADJUSTMENT (AS NEEDED)

- ONLY KITCHEN CABINETS ARE SHOWN FOR DETAIL.
- ADJUST HINGES (AS NEEDED) SO THAT THE GAP AROUND ALL DOORS IS THE SAME AND THERE IS NO INTERFERENCE BETWEEN DOORS AND CABINETS.
- ADJUST MAGNET CATCH BRACKETS AS NEEDED.

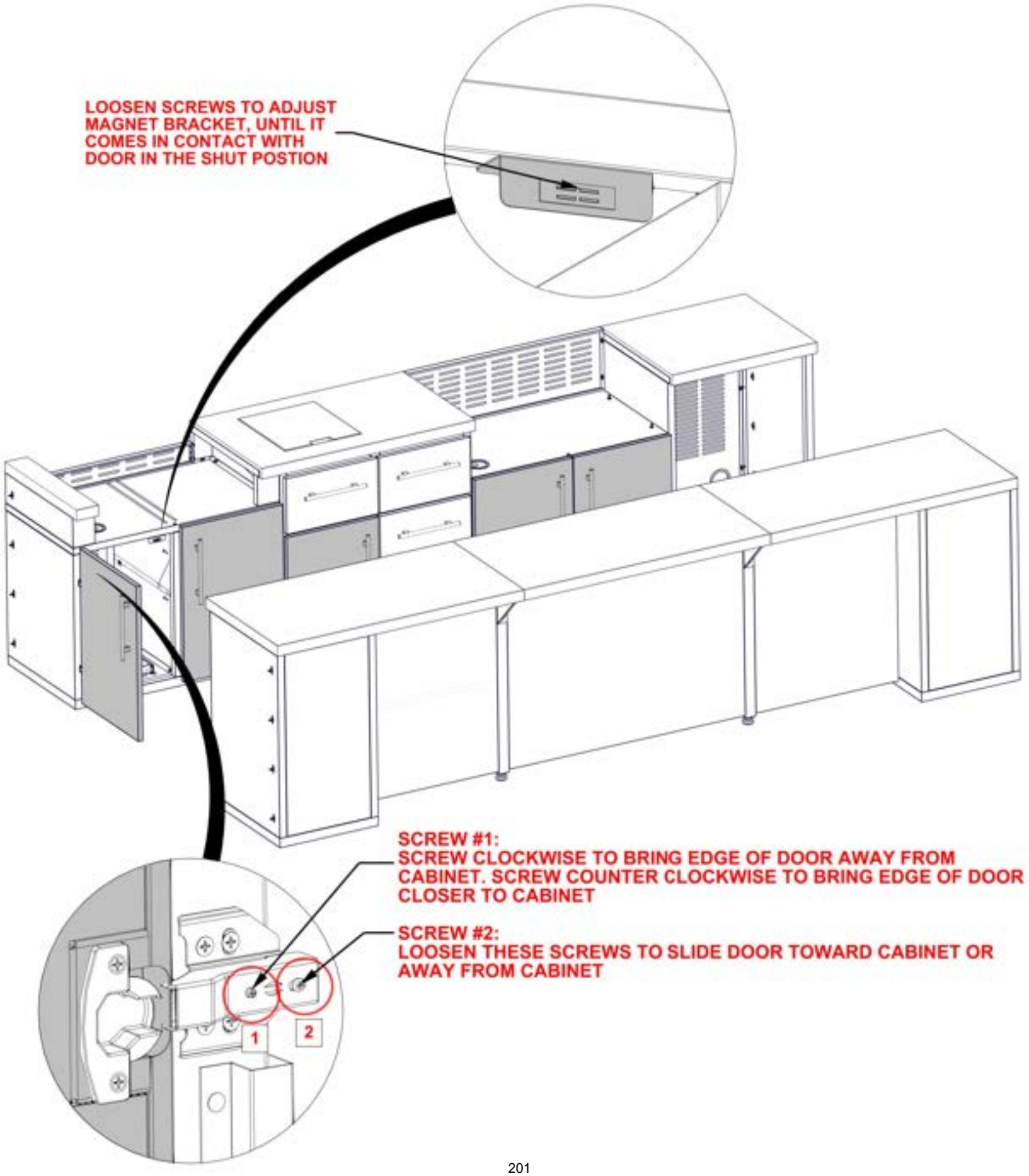

STEP 137 - KITCHEN ACCESSORY

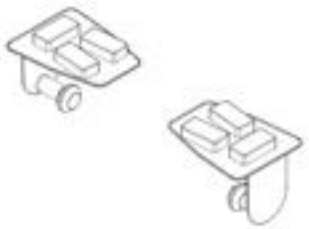

A4M02290 (x1) MAGNETIC PAPER TOWEL HOLDER

- ONLY KITCHEN CABINETS ARE SHOWN FOR DETAIL.
- MAGNETIC PAPER TOWEL HOLDER CAN BE ATTACHED TO ANY METAL SURFACE ON KITCHEN.
- WE RECOMMEND ATTACHING TO THE INSIDE OF GRILL CABINET DOORS OR UNDERNEATH BAR.
- MAKE SURE TO KEEP PAPER TOWEL HOLDER AT A SAFE DISTANCE FROM GRILLING SURFACE.

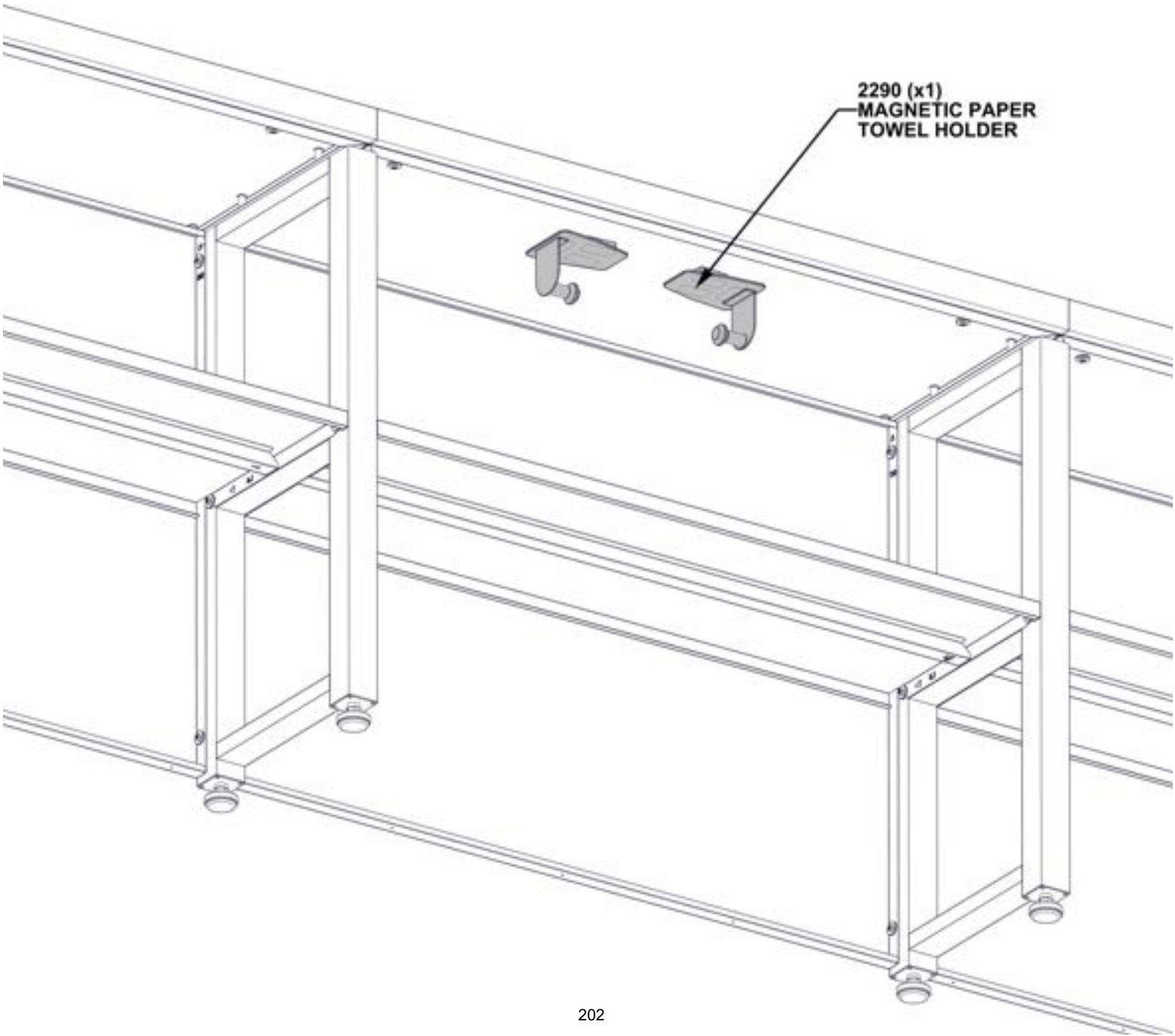

STEP 138 - KITCHEN ANCHORING

Qty	PartNo	Description
8	H100630	WASHER FLAT 8x19 BLK
8	H100120	CONCRETE ANCHOR 1/4"x2"

- MANUFACTURER RECOMMENDS INSTALLATION ON CONCRETE SURFACE OR CONCRETE POST PADS AS SHOWN BELOW.
- FOR INSTALLATION ON WOOD DECK, YOU MUST ENSURE THERE IS AMPLE STRUCTURAL SUPPORT UNDER THE DECK. HARDWARE NOT INCLUDED FOR DECK ATTACHMENT.

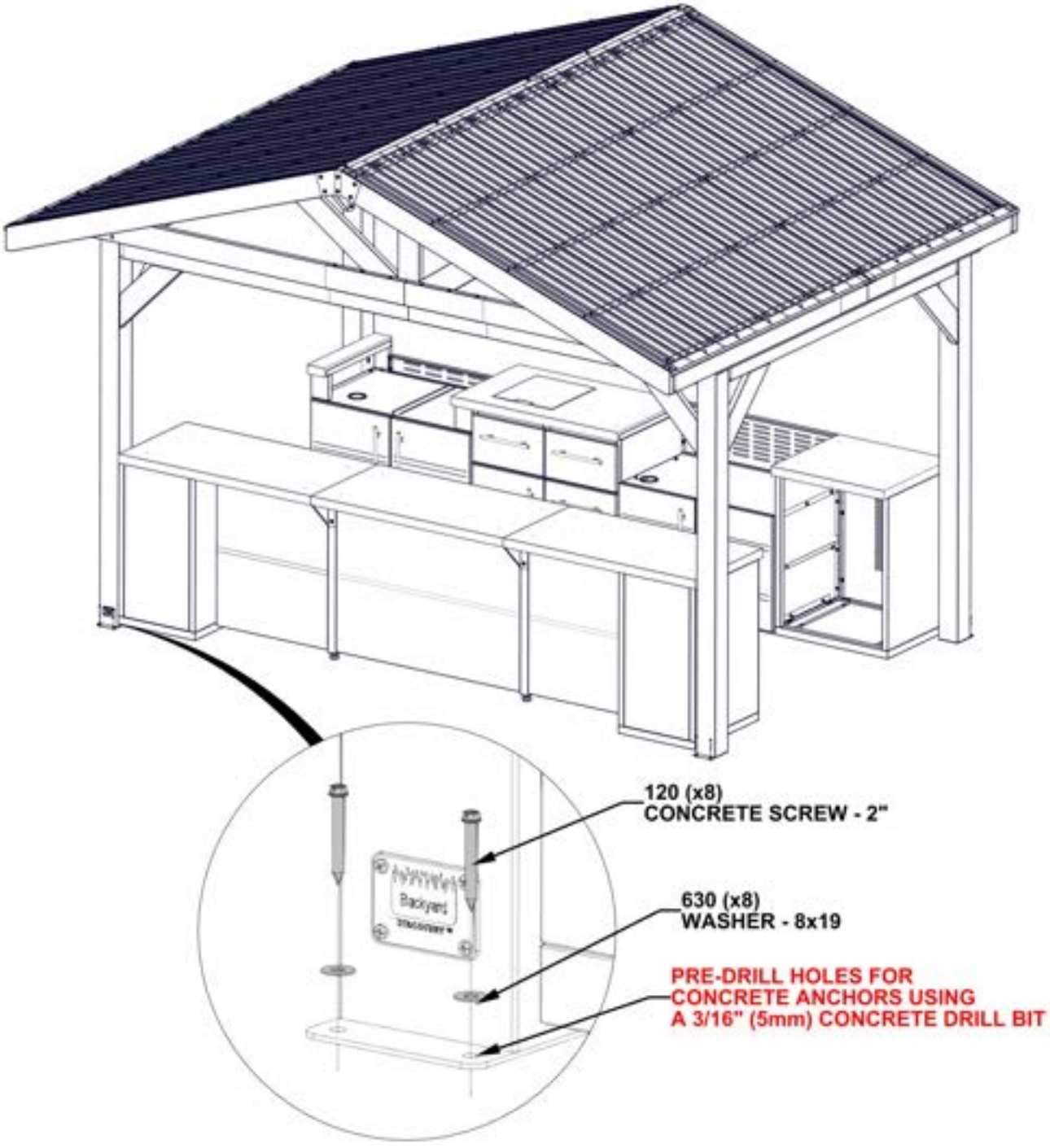

OUTDOOR KITCHEN GRILL KIT



9240025 OUTDOOR KITCHEN GRILL KIT
(x1)

- FOR INSTALLATION AND DETAILED INFORMATION OF OUTDOOR KITCHEN GRILL KIT, REFER TO ASSEMBLY INSTRUCTIONS THAT COME PACKAGED WITH THE OUTDOOR KITCHEN GRILL KIT.
- FOLLOW DIRECTIONS FOR PROPER CARE AND USE.

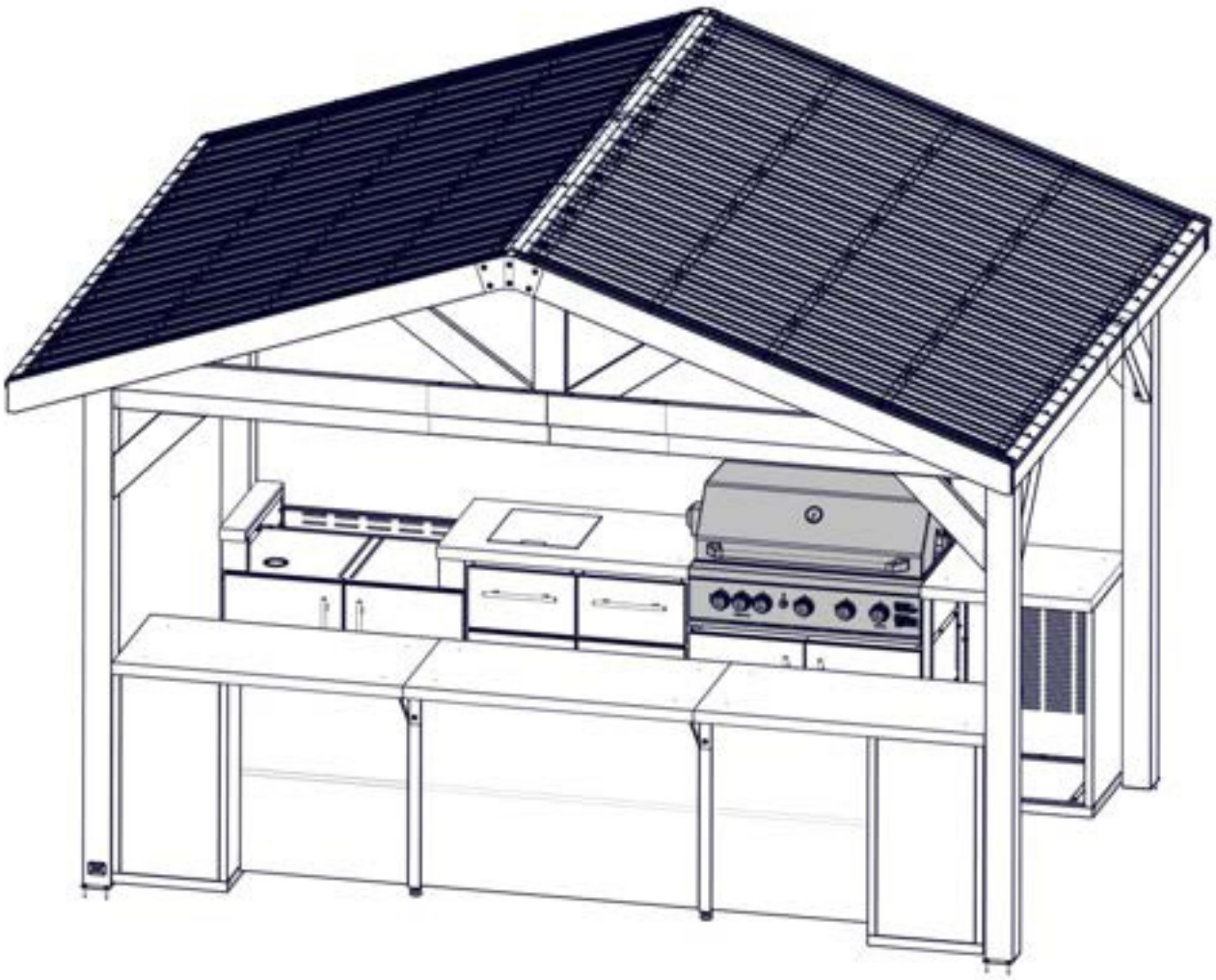

NATURAL GAS CONVERSION KIT AVAILABLE BY CONTACTING RANGE OUTDOOR LIVING AT www.rangeoutdoorliving.com 1-833-689-8428

OUTDOOR KITCHEN PIZZA OVEN



9240018 OUTDOOR KITCHEN PIZZA OVEN
(x1)

- FOR INSTALLATION AND DETAILED INFORMATION OF OUTDOOR KITCHEN PIZZA OVEN, REFER TO ASSEMBLY INSTRUCTIONS THAT COME PACKAGED WITH THE OUTDOOR KITCHEN PIZZA OVEN.
- FOLLOW DIRECTIONS FOR PROPER CARE AND USE.

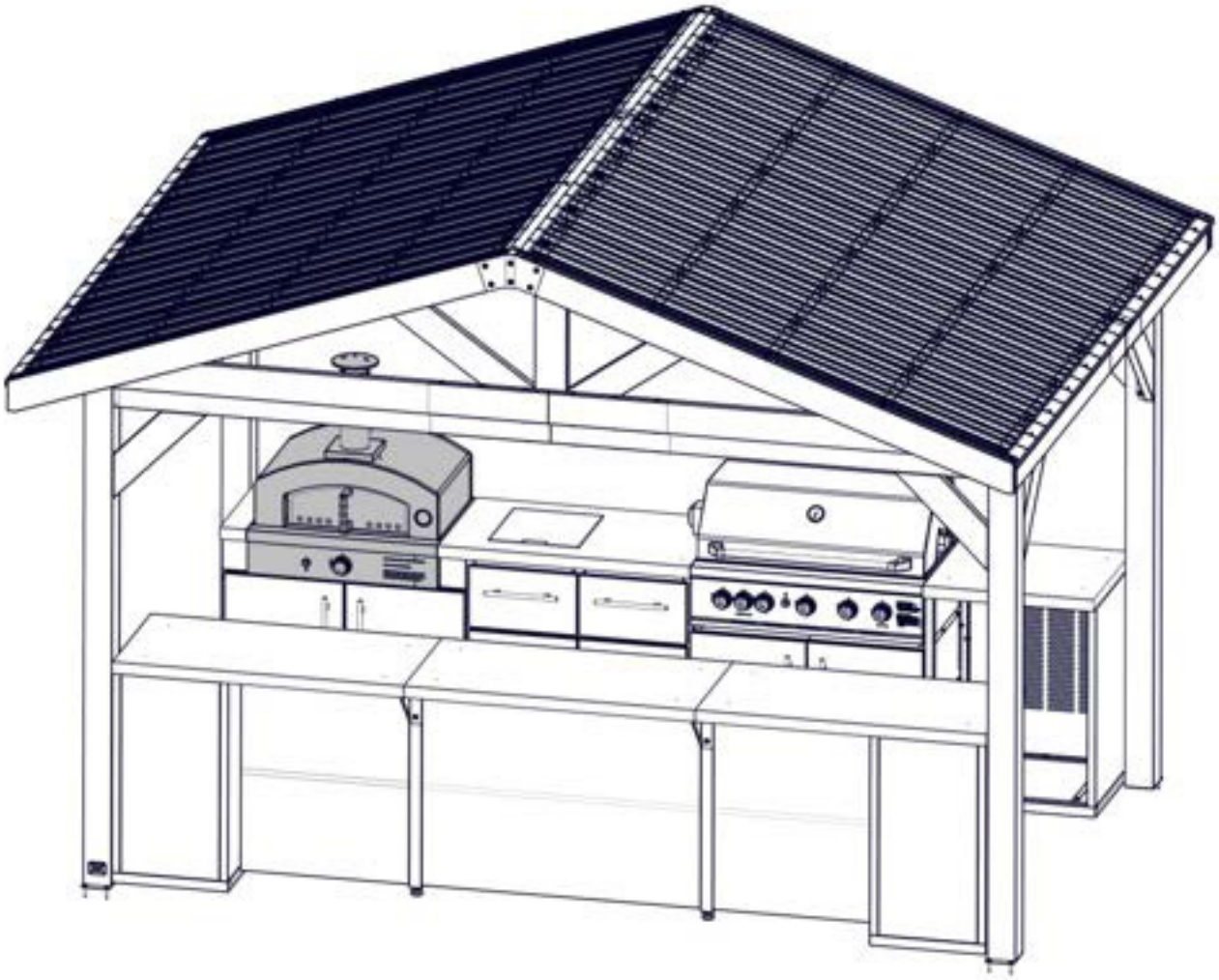

NATURAL GAS CONVERSION KIT AVAILABLE BY CONTACTING RANGE OUTDOOR LIVING AT www.rangeoutdoorliving.com 1-833-689-8428

OUTDOOR KITCHEN FRIDGE



9240162 (x1) OUTDOOR KITCHEN FRIDGE - RIGHT OPEN

- FOR INSTALLATION OF OUTDOOR KITCHEN FRIDGE, REFER TO PAGES IN THIS INSTRUCTION MANUAL.
- FOR DETAILED INFORMATION OF OUTDOOR KITCHEN FRIDGE, REFER TO ASSEMBLY INSTRUCTIONS THAT COME PACKAGED WITH THE OUTDOOR KITCHEN FRIDGE.
- FOLLOW DIRECTIONS FOR PROPER CARE AND USE.

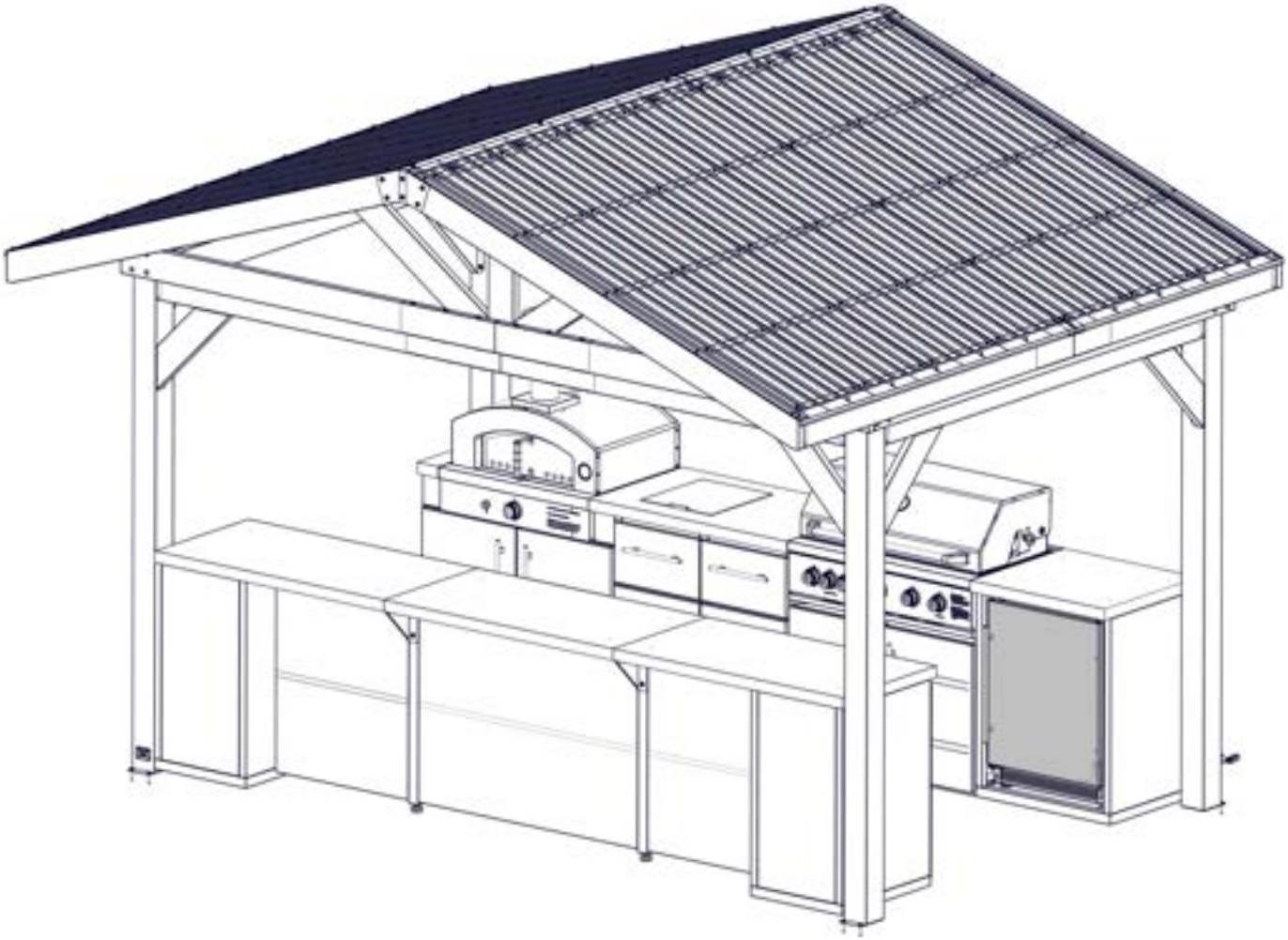

OUTDOOR KITCHEN FRIDGE

- CAREFULLY SLIDE FRIDGE INTO CABINET OPENING MAKING SURE THAT THE ELECTRICAL CORD IS ROUTED THROUGH THE HOLES IN THE BACK PANEL OF THE CABINET.
- IF FRIDGE IS NOT IN UPRIGHT POSITION, PLEASE LET SIT FOR 24 HRS BEFORE PLUGGING INTO RECEPTACLE.
- FRIDGE CANNOT BE CONNECTED TO ELECTRICAL ENCLOSURE ATTACHED TO OUTDOOR STRUCTURE.

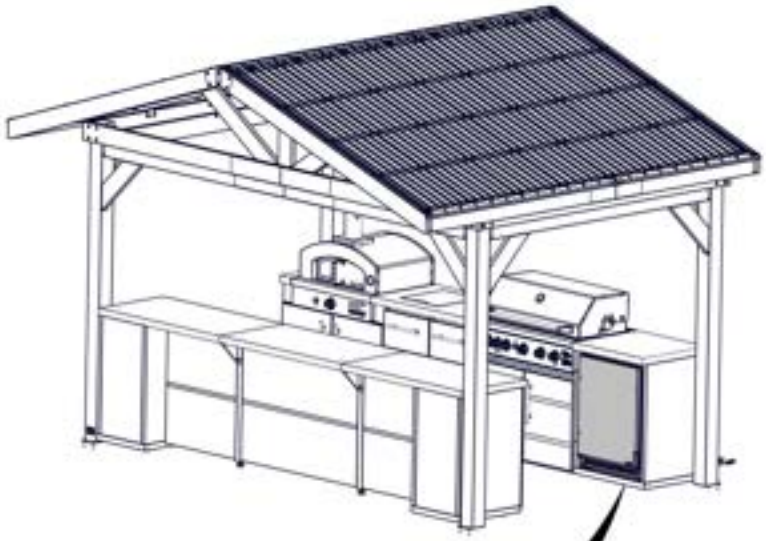

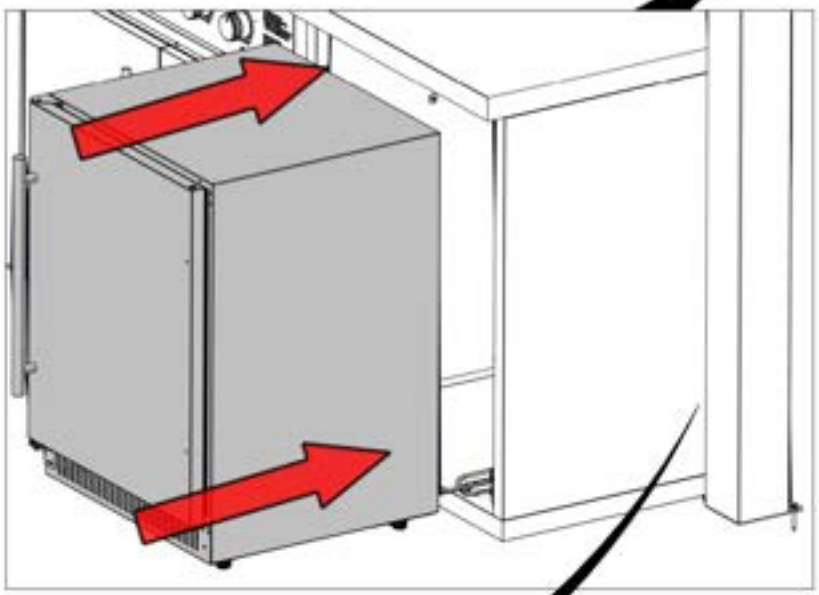

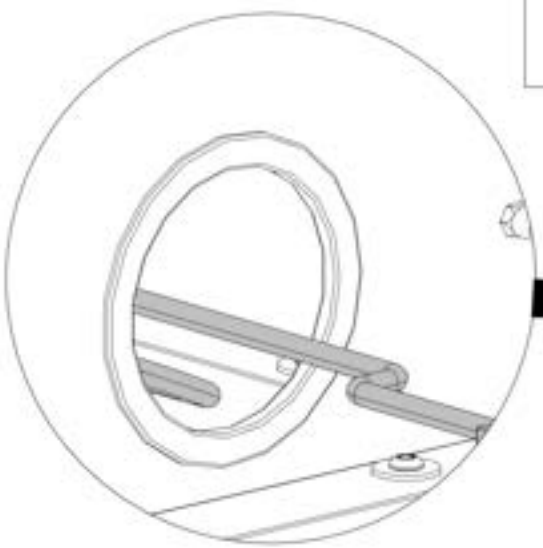

OUTDOOR KITCHEN FRIDGE

- ALIGN FEET ON FRIDGE UNIT SO THAT IT IS LEVEL AND DOES NOT TILT.
- TURN FEET CLOCKWISE TO EXTEND THEM AND COUNTERCLOCKWISE TO SHORTEN. REPEAT THIS FOR ALL FOUR FRIDGE FEET AS NEEDED TO LEVEL.

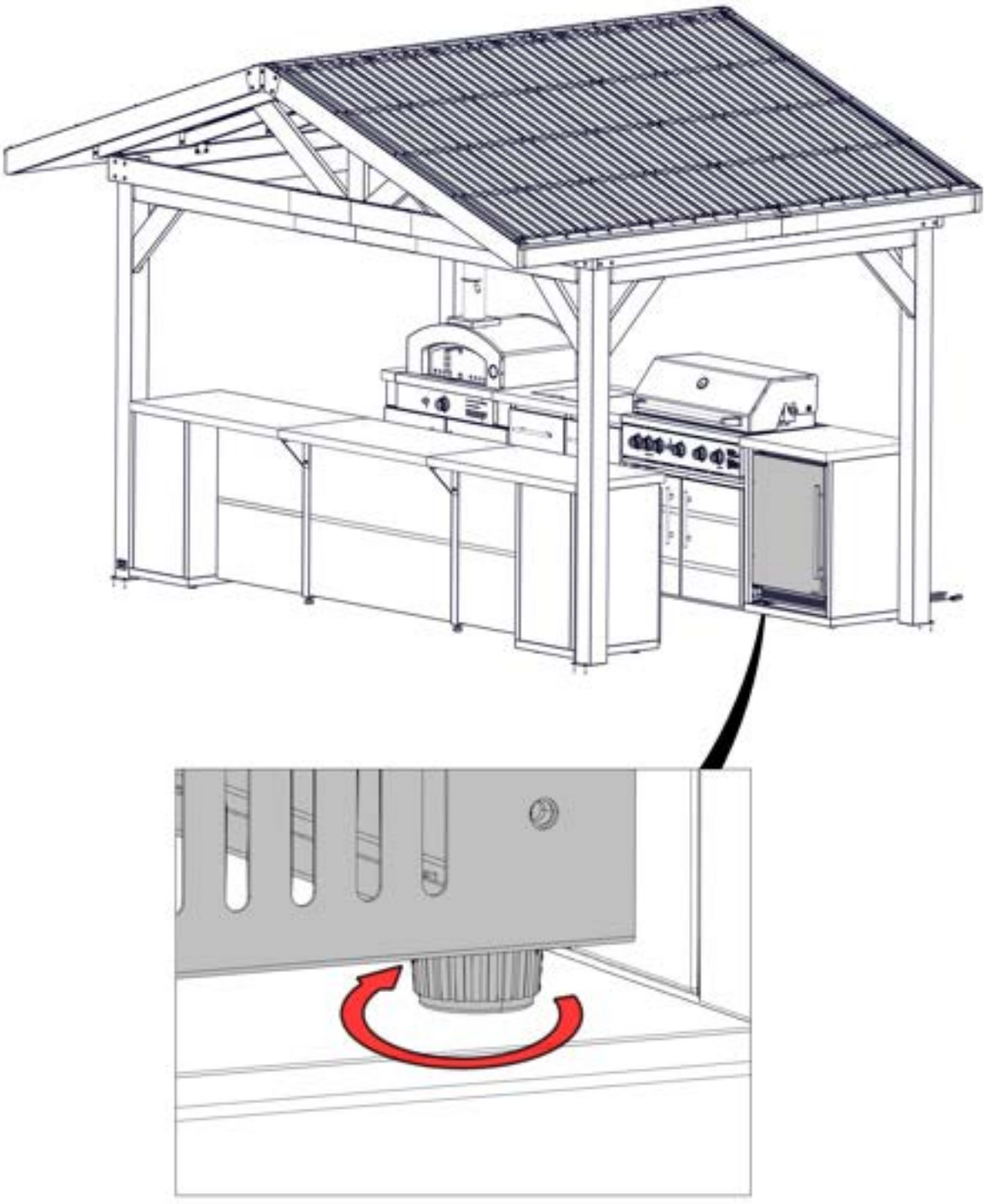

PowerPort™

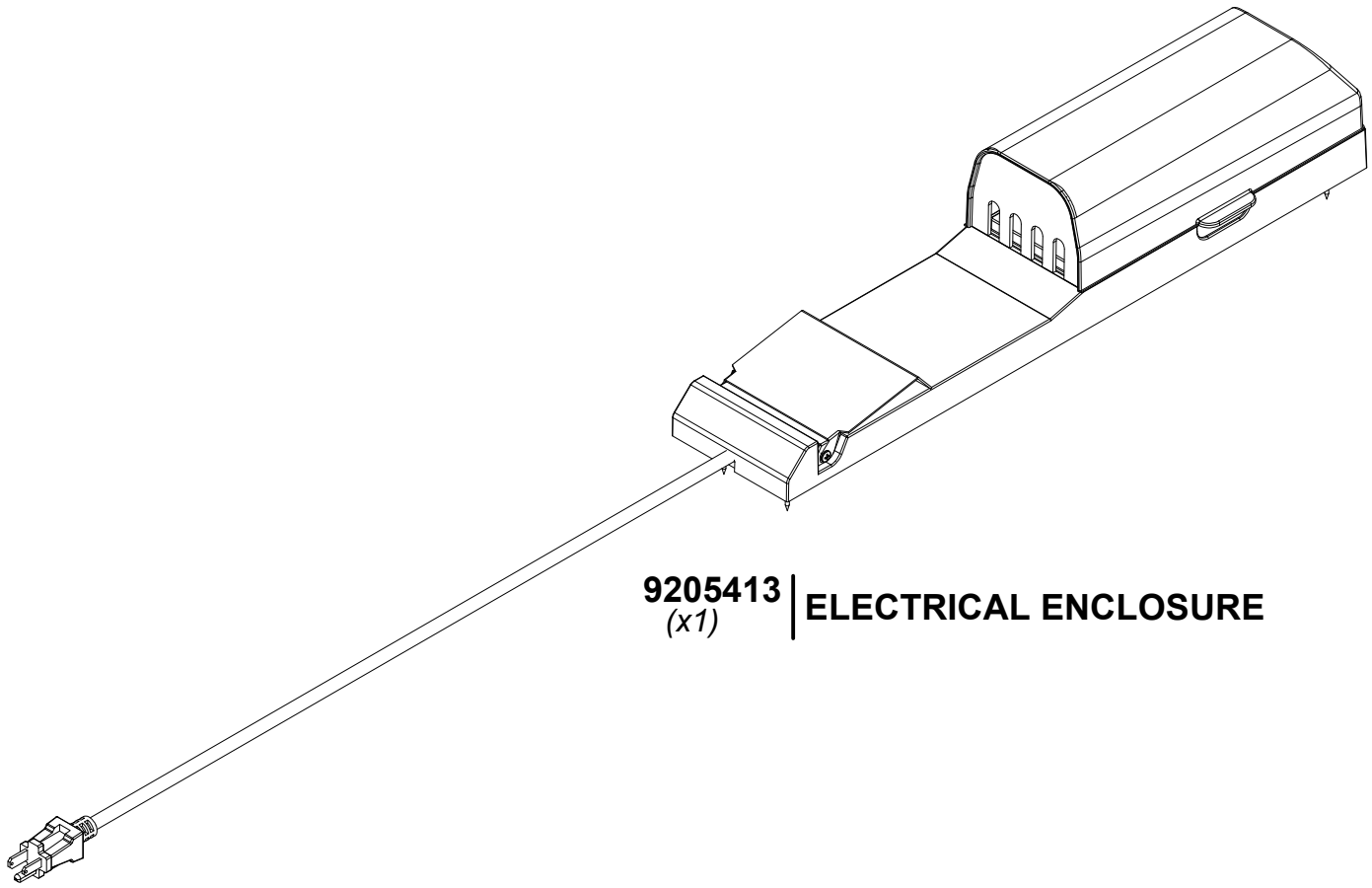

9205413 *(x1)* | **ELECTRICAL ENCLOSURE**

FOR POWERPORT INSTALLATION REFER TO ASSEMBLY INSTRUCTIONS THAT COME PACKAGED WITH THE POWERPORT KIT. INSTALL ON ANY EXTERIOR POST THAT IS DESIRED. FOLLOW DIRECTIONS FOR PROPER INSTALLATION.

IT IS RECOMMENDED TO INSTALL POWERPORT ON BACK POST NEXT TO FRIDGE CABINET.

DO NOT INSTALL POWERPORT ON POST NEXT TO PIZZA OVEN, AS THIS IS TOO CLOSE TO HIGH HEAT.