KINGSTON

TO ORDER PARTS, CALL: 1-877-252-7277
www.kingstonbrass.com

VRTOV683321,WG

67" Solid Surface White Stone Freestanding Tub with Pop-UP Drain

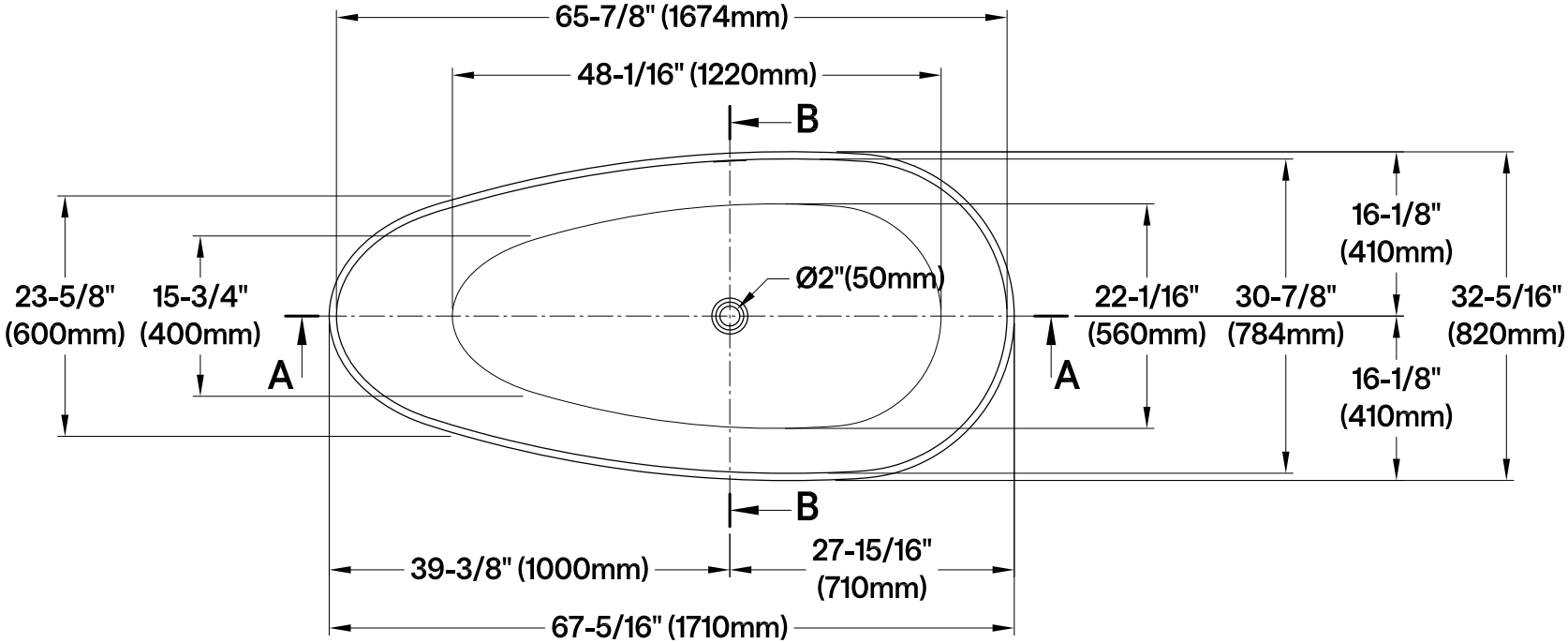

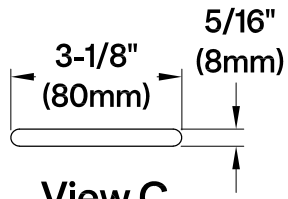

View C
SCALE (5:1)

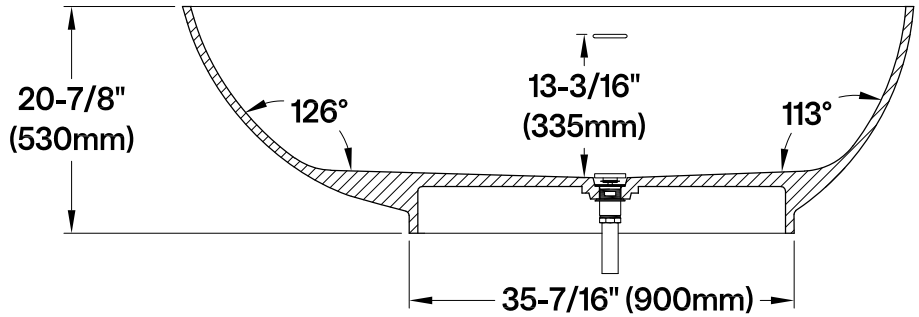

Section A-A

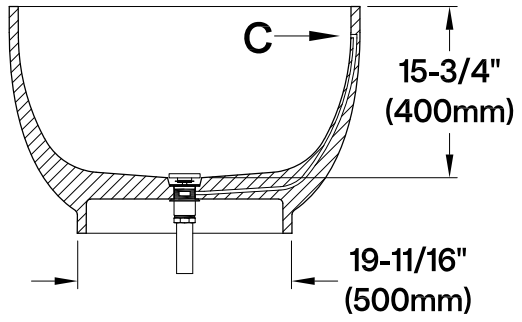

Section B-B