KINGSTON

GOURMETIER

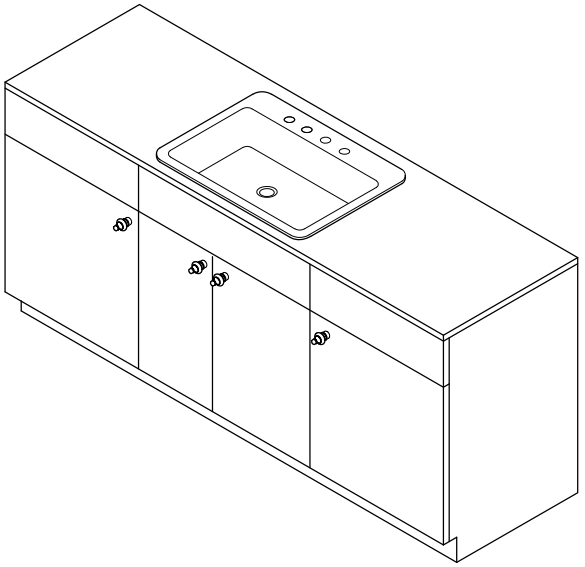

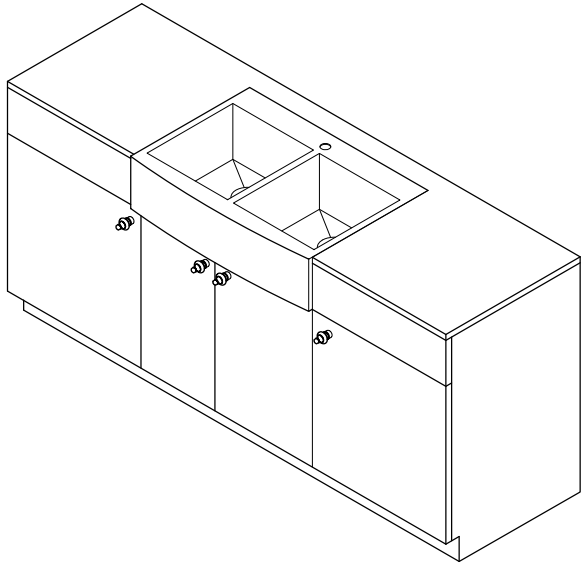

www.kingstonbrass.com

TOLL-FREE CUSTOMER SERVICE: 1-877-2-KBRASS
TECHNICAL SUPPORT E-mail: service@kingstonbrass.com
12775 Reservoir Street, Chino, CA 91710

NOTICE

Failure to follow all directions may cause leaks which may result in water damage



⚠WARNING

Lifting hazard.

Single person lift could cause injury.
Use assistance when moving or lifting.

KINGSTON

GOURMETIER

Self-Rimming Sink
Installation Instructions

These instructions are for installing this KINGSTON self-rimming stainless steel sink, which can be installed above the countertop. Before installation, make sure to have the paper template available as a guide, and using the actual sink will help achieve a more accurate cutout.

Note:

- It is recommended that all sink installations be performed by a qualified professional.
- Inspect sink prior to installation.
- Follow all plumbing and building codes.
- The warranty will be voided if all instructions are not followed.

Installation:
If Countertop needs to be cut, mark sink cut-out by placing sink upside down, check under the counter to make sure that the sink bowl will fit into the sink without interference of the cabinet.

Installation Step:

1. Trace completely around the edge of the sink, remove sink and draw a cut line 5/16" inside the outside line, follow the sinks radius accordingly.
2. Drill hole on the inside of the cut line and using a saw cut around the perimeter of the sink following the cut line.

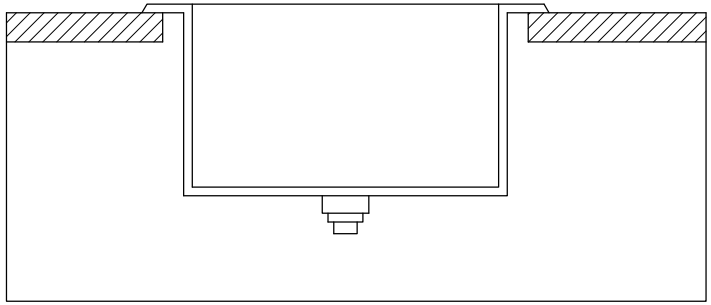

3. Place the sink into the cut out opening and be sure it is properly seated, make sure the sink rim covers caulking all round. Insert the clips into the U shape channels at the backside of the sink rim.(recommended clip placement, two clips at least on each rim) .

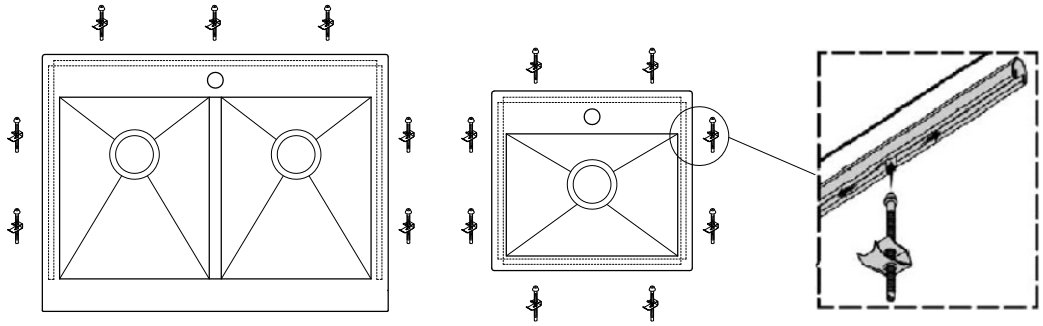

4. Rotate the clip, tighten by screw driver to secure sink, do not over tighten as damage can result.

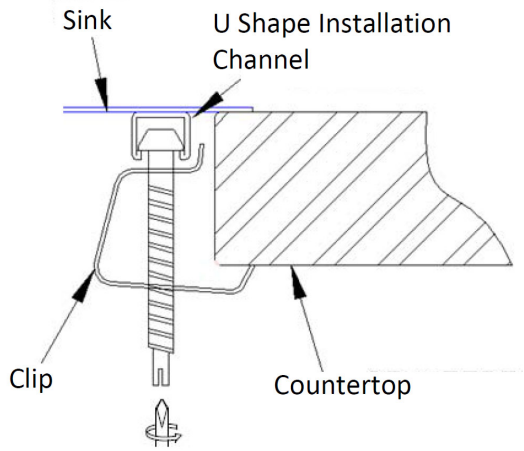

©2025 LVC Kingston LLC. All Rights Reserved.
2025-05-D