KINGSTON

TO ORDER PARTS, CALL: 1-877-252-7277
www.kingstonbrass.com

KS7411,5,7,8BL

Single Handle Lavatory Faucet with Brass Pop-Up

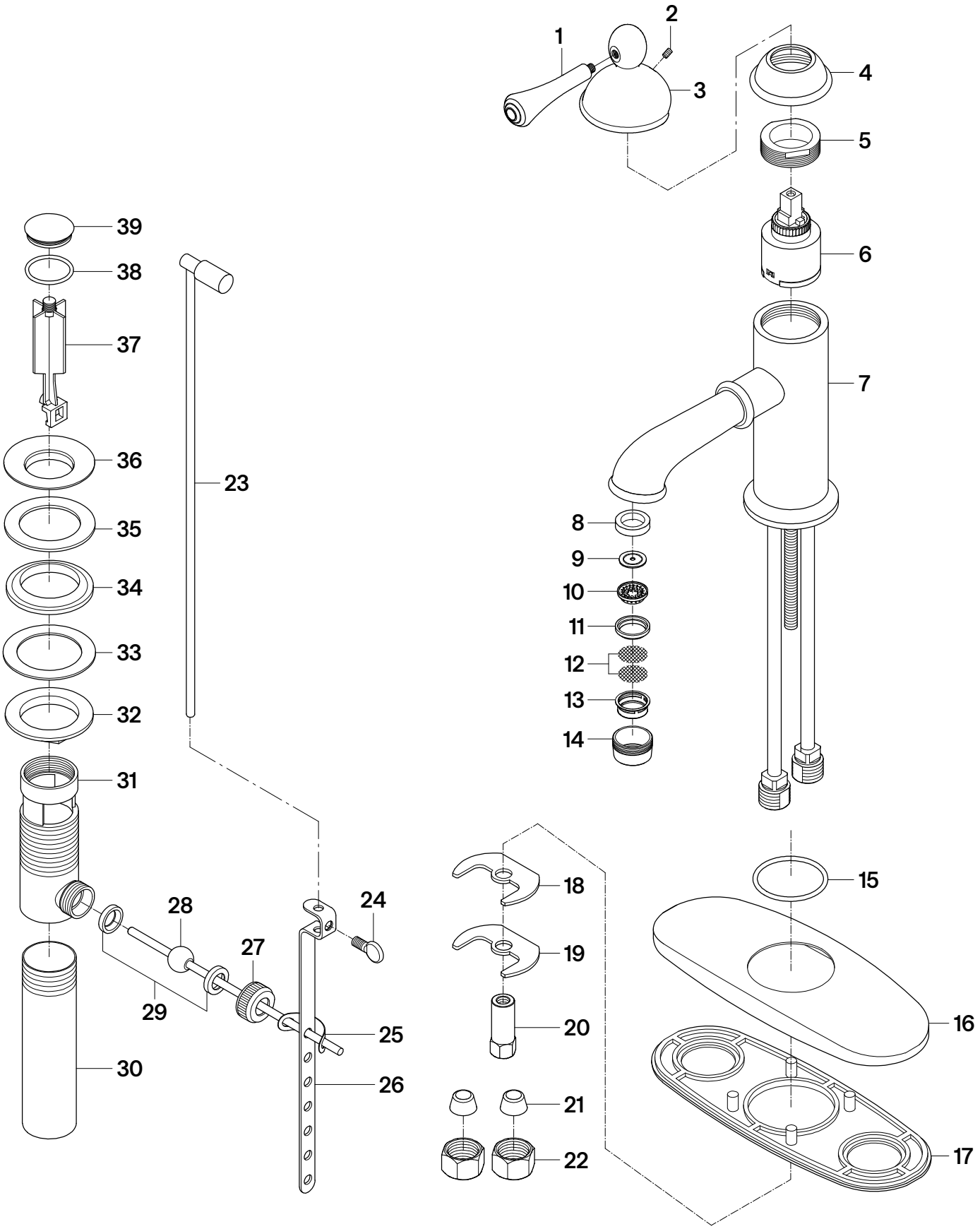

2025-10-C