# Stargaze®

72" x 36" freestanding Heated BubbleMassage™ air bath with straight shroud

**K-1958-GH**

## Features

- 118 to 122 airjets release thousands of heated bubbles that surround and support the body in a warm massage
- Automatic and manual purge cycles remove residual water from air channels after use
- Variable-speed blower lets you adjust massage intensity to 18 levels
- Freestanding design creates a striking focal point in your bathing area
- 16" (406 mm) depth offers a deep soaking experience
- Integral lumbar support on both ends
- Textured bottom surface
- Wide ledge on one side is ideal for deck-mount faucet and/or handshower
- Straight shroud
- Built-in 600W BubbleMassage™ heater warms humidified air before it enters the bath
- Automatic and manual purge cycles remove residual water from air channels after use

## Material

- Acrylic

## Technology

- Auto-shutoff timer on blower allows users to enjoy Heated BubbleMassage™ experience for 60 minutes before turning off
- User interface: electronic keypad control

## Installation

- Center drain
- Freestanding
- PureFlo drains are not recommended for a deck-mount faucet installation
- Remote blower motor installation required (relocation kit is included)

## Required Products/Accessories

For freestanding installation

K-7265 Brass toe tap bath drain

## Recommended Products/Accessories

K-23726 Drain treatment

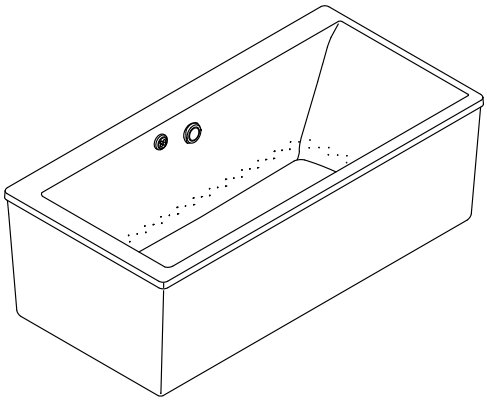

## Codes/Standards

ASME A112.19.7/CSA B45.10
CSA B45.5/IAPMO Z124
ASTM E162
ASTM E662
UL 1795
CSA C22.2 No. 218.2
cUL Listed
UL Listed

## KOHLER® Plastic Baths and Shower Bases Lifetime Limited WarrantyKOHLER® Hydrotherapy Components Five-Year Limited Warranty

See website for detailed warranty information.

## Available Colors/Finishes

*Color tiles intended for reference only.*

| Color | Code | Description |
|---|---|---|
| | 0 | White |

# Stargaze®

72" x 36" freestanding Heated BubbleMassage™ air bath with straight shroud

**K-1958-GH**

No change in measurements if connected with drain illustrated. (K-37386)

Recommended Faucet Location

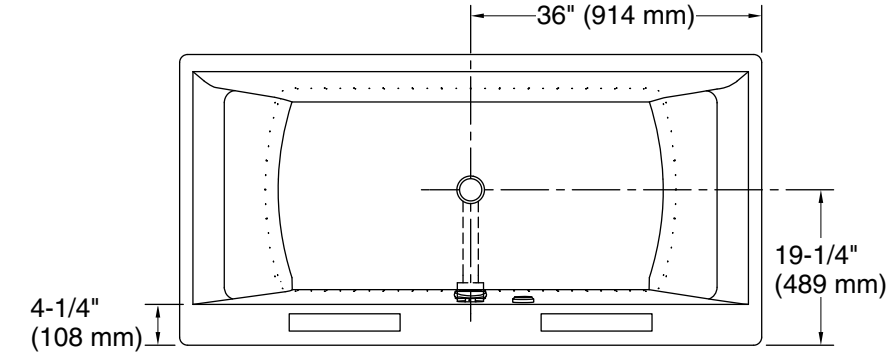


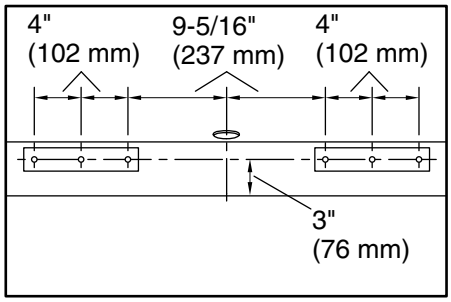


Recommended Faucet Hole Location

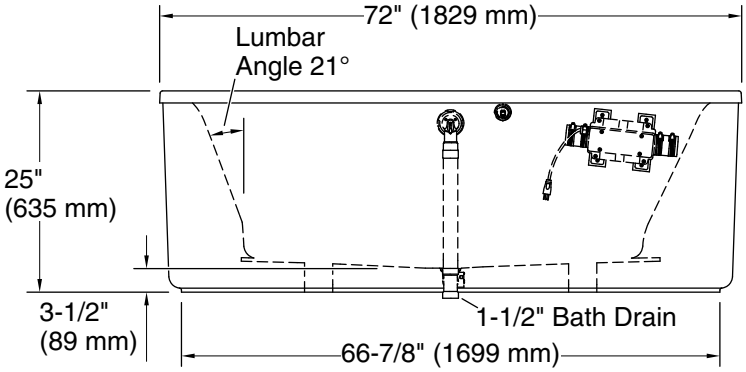


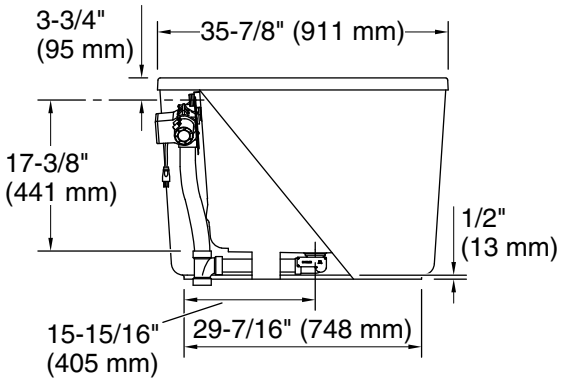


## Required Electrical Service

Two dedicated circuits required, protected with Class A Ground-Fault Circuit-Interrupter (GFCI). Outside North America, this device may be known as a Residual Current Device (RCD).

| | |
|---|---|
| Blower: | 120 V, 15 A, 60 Hz |
| Heater: | 120 V, 15 A, 60 Hz |

## Technical Information

All product dimensions are nominal.

| | |
|---|---|
| Drain location: | Center |
| Basin area, bottom: | 50-3/4" x 24-7/8" (1289 mm x 632 mm) |
| Basin area, top: | 67-5/8" x 29-3/16" (1718 mm x 741 mm) |
| Weight: | 100 lbs (45.4 kg) |
| Minimum floor load: | 45 lbs/ft² (219.7 kg/m²) |
| Water depth: | 15-11/16" (399 mm) |
| Water capacity: | 90 gal (340.7 L) |
| Template: | Footprint, 1245664, not required, included |
| Electrical component rating: | Blower: 120 V, 10 A, 60 Hz<br>Heater: 120 V, 5 A, 60 Hz |

## Notes

Measure your actual product for rough-in details.

Install this product according to the installation instructions.

The hot water supply should be 70% of the capacity of the bath or greater. Installations will vary.

This bath is designed for freestanding installation only.

If installing a rim-mount faucet, make sure there is no interference above or below the deck before drilling any holes.