Parts:

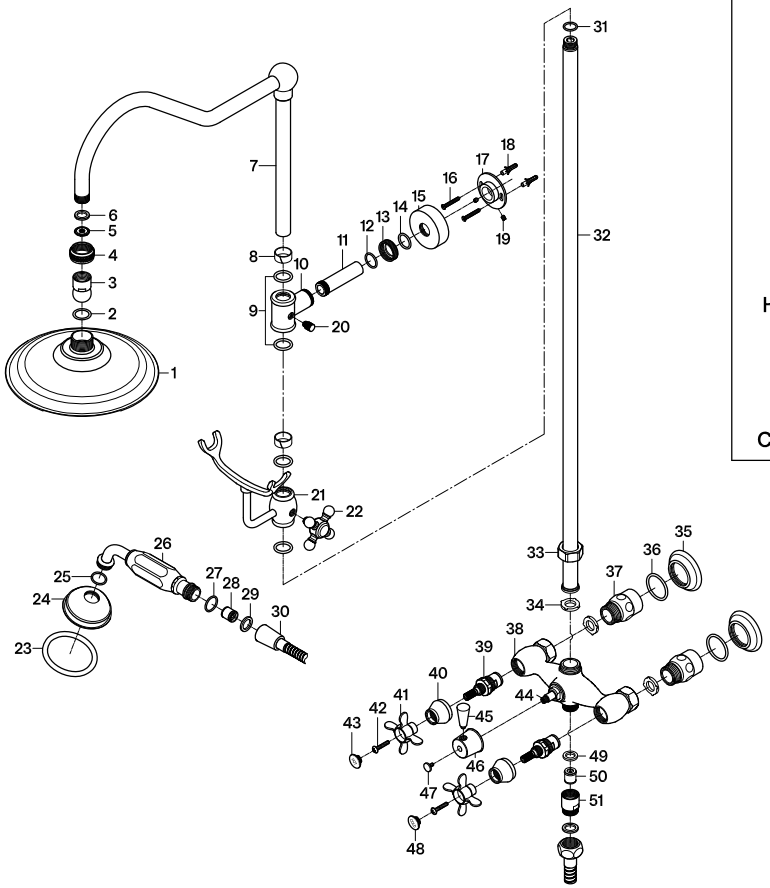

Replacement Parts:

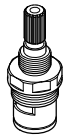

Cartridge: KS1000H



Hot Handle: KSH285H



Cold Handle: KSH285C

CARE AND MAINTENANCE OF YOUR FAUCET

Your KINGSTON faucet has been finished to the most strict standards; however, due to the high content of minerals in the water, your finish may appear dull and tarnished after time. These are some do's and don'ts to maintain the luster on your faucet for many years to come.

DO
1. Use a silicon based caulking when installing.
2. Clean your faucet with only a mild soap and water solution.
3. Dry your faucet after using it.
4. Give it a coat of Carnauba Wax periodically.

DON'T
1. Use plumbers putty when installing the faucet.
2. Use any abrasive cleaning agents.

It may seem like a very simple and short list but it is that simple to maintain your faucet, looking shiny and new.

If your faucet is already looking somewhat dull and tarnished, before replacing it, try cleaning it with a 50/50 solution of vinegar and water, you may need to soak some rags and wrap around those stubborn areas, leave
overnight and rinse completely in the morning, apply Carnauba wax once you have removed the mineral deposits.

KINGSTON

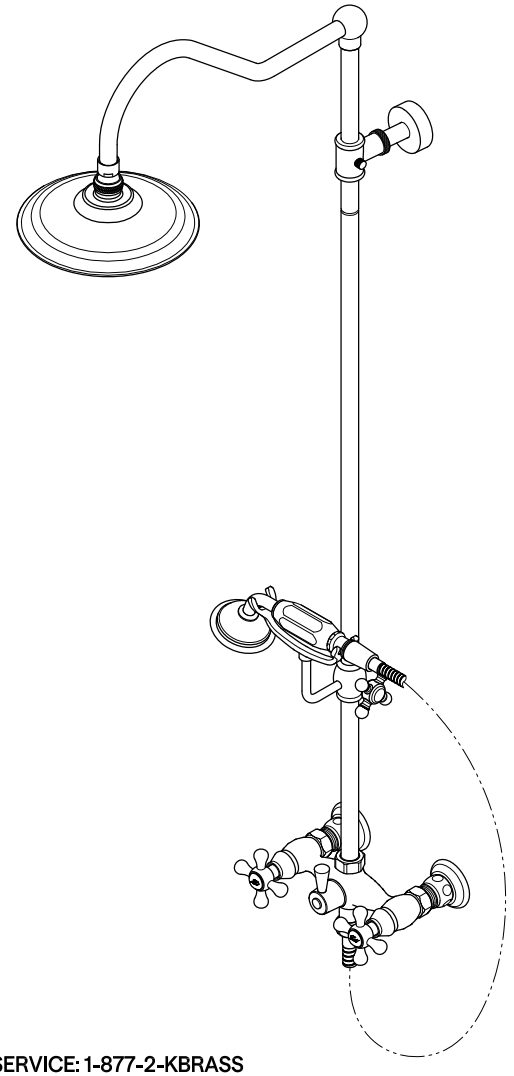

www.kingstonbrass.com

TOLL-FREE CUSTOMER SERVICE: 1-877-2-KBRASS
TECHNICAL SUPPORT E-mail: service@kingstonbrass.com
12775 Reservoir Street, Chino, CA 91710

NOTICE

Failure to follow all directions may cause leaks which may result in water damage

⚠CAUTION

Failure to follow all installation directions may cause product to detach from the wall and cause serious injury

KINGSTON

INSTALLATION INSTRUCTIONS
Wall Mount Shower Combination

BEFORE BEGINNING INSTALLATION:

1. Measure the desired height for the shower head placement and measure 42-1/2" down from that point; this will give you the height of the rough in stub-outs.
2. Prepared the supply stub outs by installing 2 1/2-14 NPT stub outs, at 6" Center to center, protruding 3/4" from the finished wall.
3. Apply Teflon tape onto the nipple threads.

1

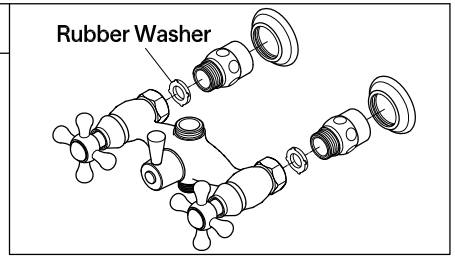

1. Insert the base flanges and thread the faucet inlet elbows onto the rough-in nipples previously installed; please note; the inlet faucet elbows are designed with an eccentric feature for an extra 1/4" adjustment, thus allowing the elbow to be turned to fit the faucet's 6" center-to-center spread.

2

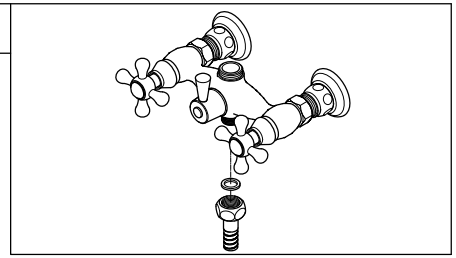

2. Thread the shower hose adapter to the bottom outlet of the faucet and attach the faucet body to the stub-out nipples.

3

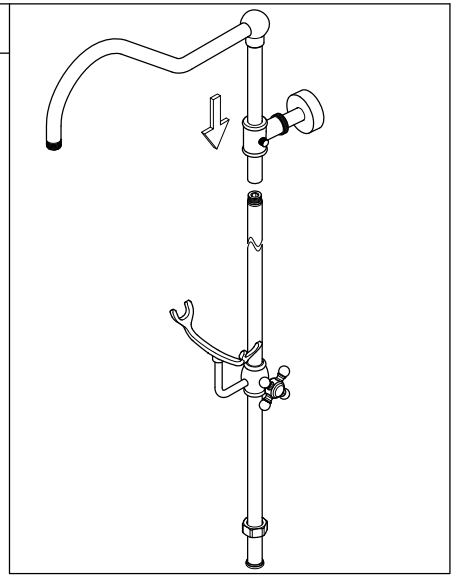

3. Assemble the shower riser by sliding the hand shower cradle onto the lower riser, slide the wall support bracket onto the upper riser, attach the mounting plate to the wall support bracket, and thread the lower riser onto the upper riser.

4

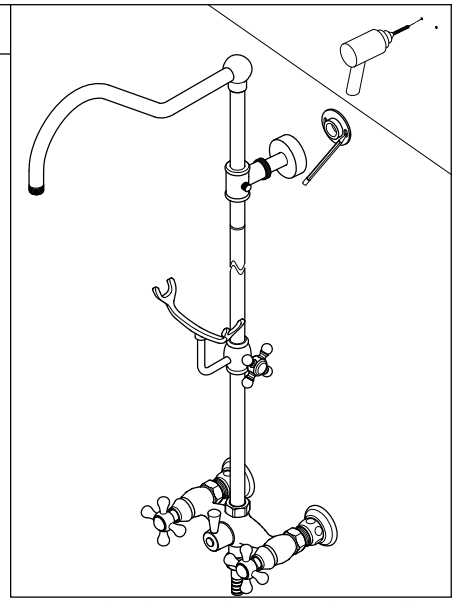

4. Place the shower riser assembly on the top outlet and secure lightly, do not tighten; make sure the riser assembly is plumb and level, and mark the location of the mounting plate holes on the wall; remove the shower riser assembly; remove the mounting plate, insert the support bracket flange and reinstall mounting plate on the support bracket. Drill the appropriate size anchor holes on the wall and insert the anchors.

Need Tools:

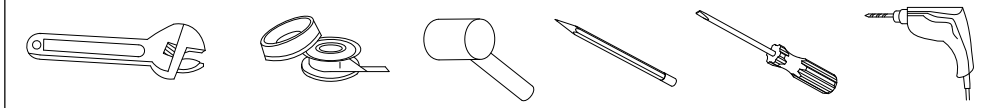

5

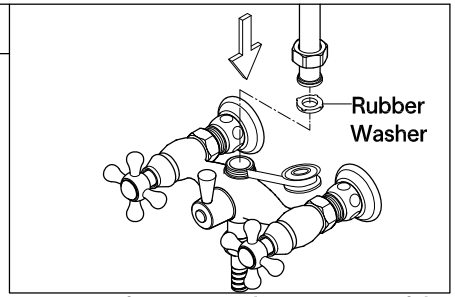

5. Apply Teflon tape to the top outlet of the faucet body, place the shower riser in the top outlet, and secure by tightening the nut on the riser.

6

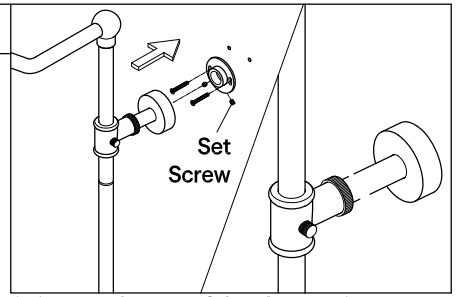

6. Secure the top of the shower riser assembly, threading the appropriate screws onto the pre-installed wall anchors. Adjust support rod of wall support bracket to its appropriate long and secure the set screw tightening with an Allen wrench.

7

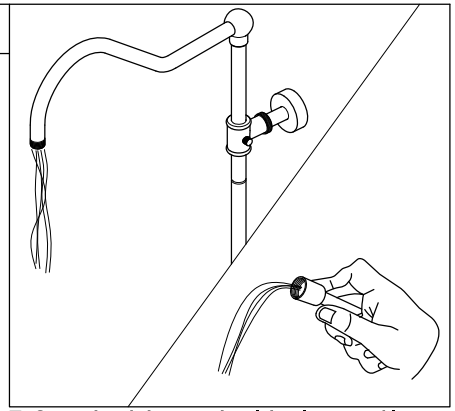

7. Open both hot and cold valves and let the water run from the lower riser and the shower arm for 30 seconds or more. Check for leaks.

8

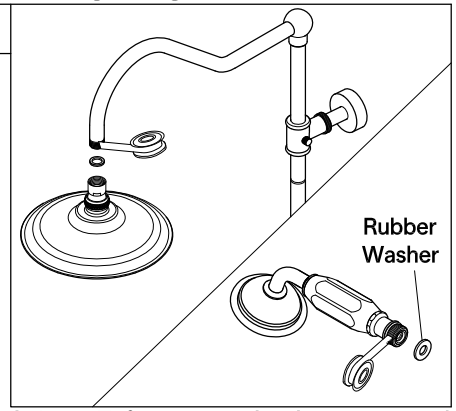

8. Apply Teflon tape to the shower arm and thread the showerhead, thread the shower hose to the bottom outlet, and thread the hand shower onto shower hose.

Warning!!!

- Do not put any weight, step, or hang on any part of this faucet, this may damage the faucet and cause water damage.
- This faucet was tested and meets ASME/ANSI standards of operation and torque tension; do not use pneumatic or electrical tools for its installation, as this may inadvertently over tighten the connection or attachment hardware of this faucet.

©2025 LVC Kingston LLC. All Rights Reserved.
2025-05-T