Neptune™ Outdoor Universal Tilt Wall Mount

FOR 32" TO 75" TVs

OWMTL

Mounting Pattern
Up to 732 x 405mm
(28.84" x 15.94")

Max Load
175lb
(79kg)

The Neptune™ Outdoor Universal Tilt Wall Mount is the ideal mounting solution for Neptune™ Outdoor TVs. This all-season mount is specially coated with a protective anti-corrosive e-coating that repels against damaging temperature-related and outdoor corrosive elements. In addition to simple installation with a Hook-and-Hang™ design, this mount offers tilt functionality while keeping the TV a mere 2.64" (67mm) from the wall. The IncreLok™ tilt technology allows you to lock the tilt angle in 5° increments for your ideal viewing experience and to prevent tampering or undesired adjustment. Tamper-resistant hardware deters theft, offering peace-of-mind with every installation and for additional security, the mount has accommodations for optional padlocks.

- Made of corrosion resistant materials for weather resistance
- Universal mount fits TVs with mounting patterns up to 732 x 405mm (28.84"W x 15.94"H) and up to 600 x 400mm VESA® compliant
- Lock the tilt angle in 5° increments for the perfect view and also prevent tampering or undesired adjustment with the IncreLok™ tilt technology
- 2.64" (67mm) from the wall
- Double stud mounting with 16", 20" & 24" stud placements
- Tamper-resistant hardware is standard and also has accommodations for optional padlocks
- Wood, concrete or cinder block mounting hardware included

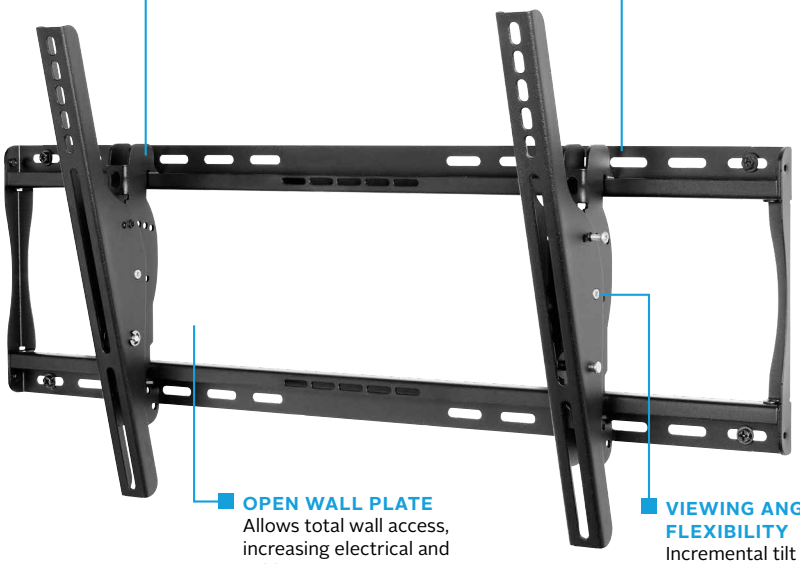

Compatible with Neptune™ Outdoor TVs

IncreLok™ Tilt Technology

RoHS 2002/95/EC

info@neptunetv.com neptuneTV.com

Model Numbers

WARRANTY: Limited 5-year

OWMTL	Neptune™ Outdoor Universal Tilt Wall Mount for 32" to 75" TVs

Product Specifications

	DIMENSIONS (W x H x D)	PRODUCT WEIGHT	LOAD CAPACITY	FINISH	AVAILABLE COLORS
OWMTL	30.87" x 16.89" x 2.64"-5.51" (784 x 429 x 67-140mm)	8.5lb (4kg)	175lb (79kg)	E-Coat Covered with Outdoor Powder Paint	Black

Package Specifications

	PACKAGE SIZE (W x H x D)	PACKAGE SHIP WEIGHT	PACKAGE UPC CODE	PACKAGE CONTENTS	UNITS IN PACKAGE
OWMTL	32.00" x 3.63" x 10.25" (813 x 92 x 260mm)	10.5lb (5kg)	735029322283	Mount and Mounting Hardware	1

Compatible with

55" Neptune™ Outdoor TVs
65" Neptune™ Outdoor TVs
75" Neptune™ Outdoor TVs

All dimensions = inch (mm)

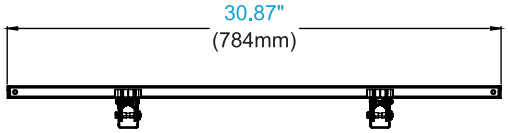

TOP VIEW

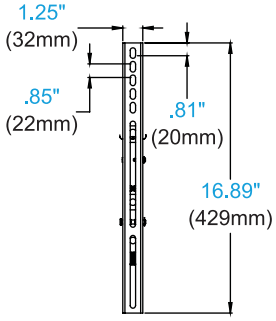

ADAPTOR DETAIL

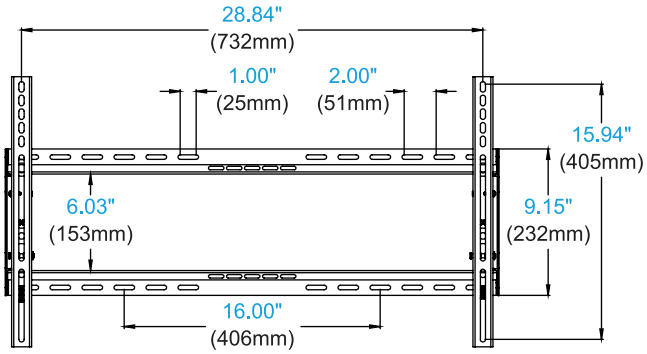

FRONT VIEW

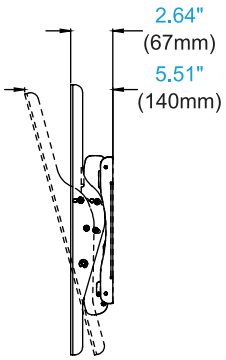

SIDE VIEW
+15°/-5° TILT

Visit **neptuneTV.com** to see the complete line of outdoor AV solutions, including outdoor-rated TVs, mounts, and accessories.

Peerless-AV
2300 White Oak Circle
Aurora, IL 60502 USA

(800) 865-2112
(630) 375-5100

Peerless-AV Latin America
Av. de las Industrias 413
Parque Industrial Escobedo
General Escobedo, N.L.,
México, 66062
+52 (81) 8384-8300

NEPTUNE™

© 2026 Peerless Industries, Inc. All rights reserved. Other parties' marks are the property of their respective owners.