# ASSEMBLY INSTRUCTIONS

## 1-DRAWER NIGHTSTAND

**A** Top Panel

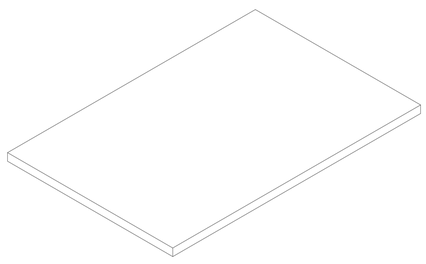

1pc

**B** Side Panel (Left)

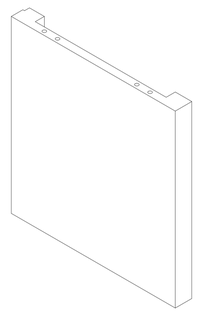

1pc

**C** Side Panel (Right)

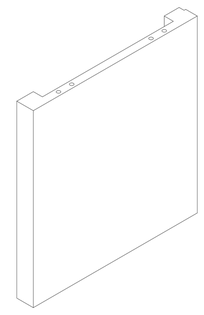

1pc

**D** Bottom Frame

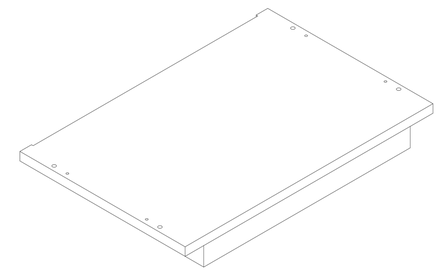

1pc

**E** Center Bar

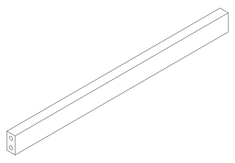

1pc

**F** Back Plywood

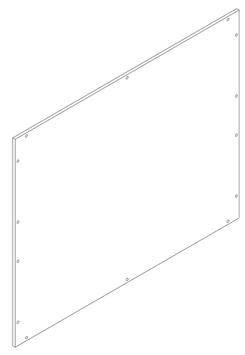

1pc

**G** Drawer Side (Left)

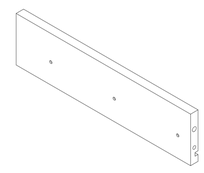

1pc

**H** Drawer Side (Right)

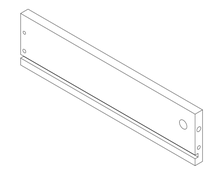

1pc

**I** Drawer Front

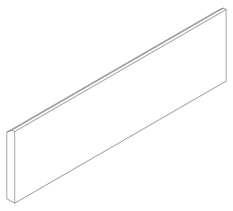

1pc

**J** Drawer Back

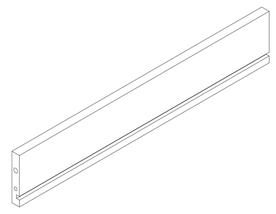

1pc

**K** Drawer Base

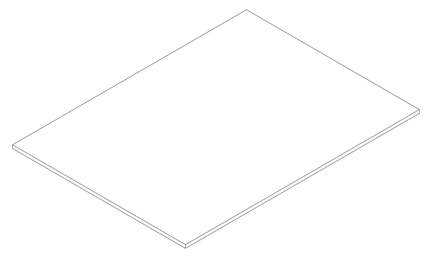

1pc

**L** Runner
300mm

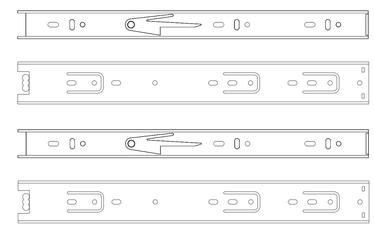

1set

**M** Dowel
M6 x 30mm

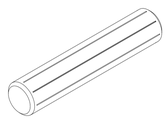

4pcs

**N** Dowel
M8 x 35mm

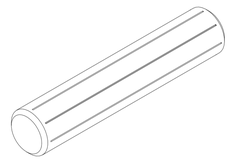

10pcs

**O** Cam Bolt
5 x 25mm

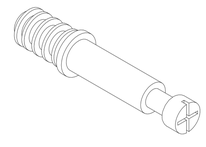

10pcs

**P** Cam Lock
15 x 12mm

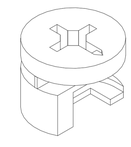

10pcs

**Q** Cam Lock Cover
17 x 5mm

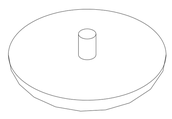

10pcs

**R** Screw
M3 x 16mm

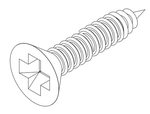

12pcs

**S** Screw
M4 x 38mm

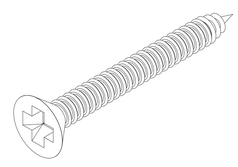

4pcs

**T** Panhead Screw
(Black)
M4 x 16mm

14pcs

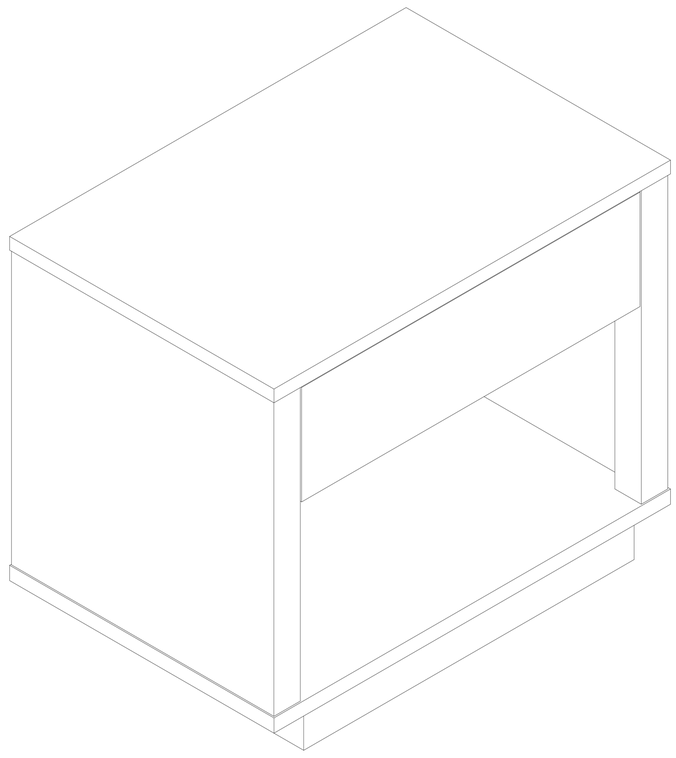

The above page lists all the contents included in the box. Please take the time to identify the hardware as well as the individual components to this product. As you unpack and prepare for assembly, place the contents on a carpeted or padded area to protect them from damage.

## 1 Insert Cam Bolt (O) into the Top Panel (A) with a screwdriver (not provided).

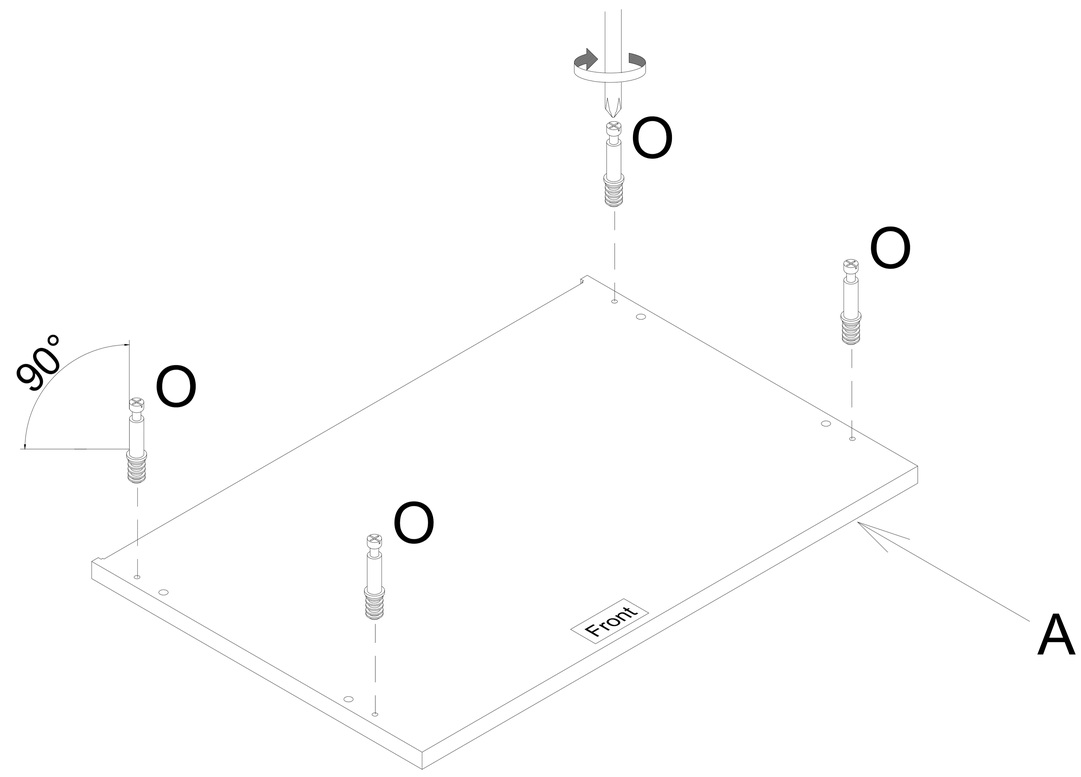


## 2 Insert Dowel (N), Cam Bolt (O) and Cam Lock (P) into the Left & Right Side Panel (B & C) with a screwdriver (not provided).

NOTE : - Ensure the arrows on each Cam Lock (P) point towards the nearest edge with holes.

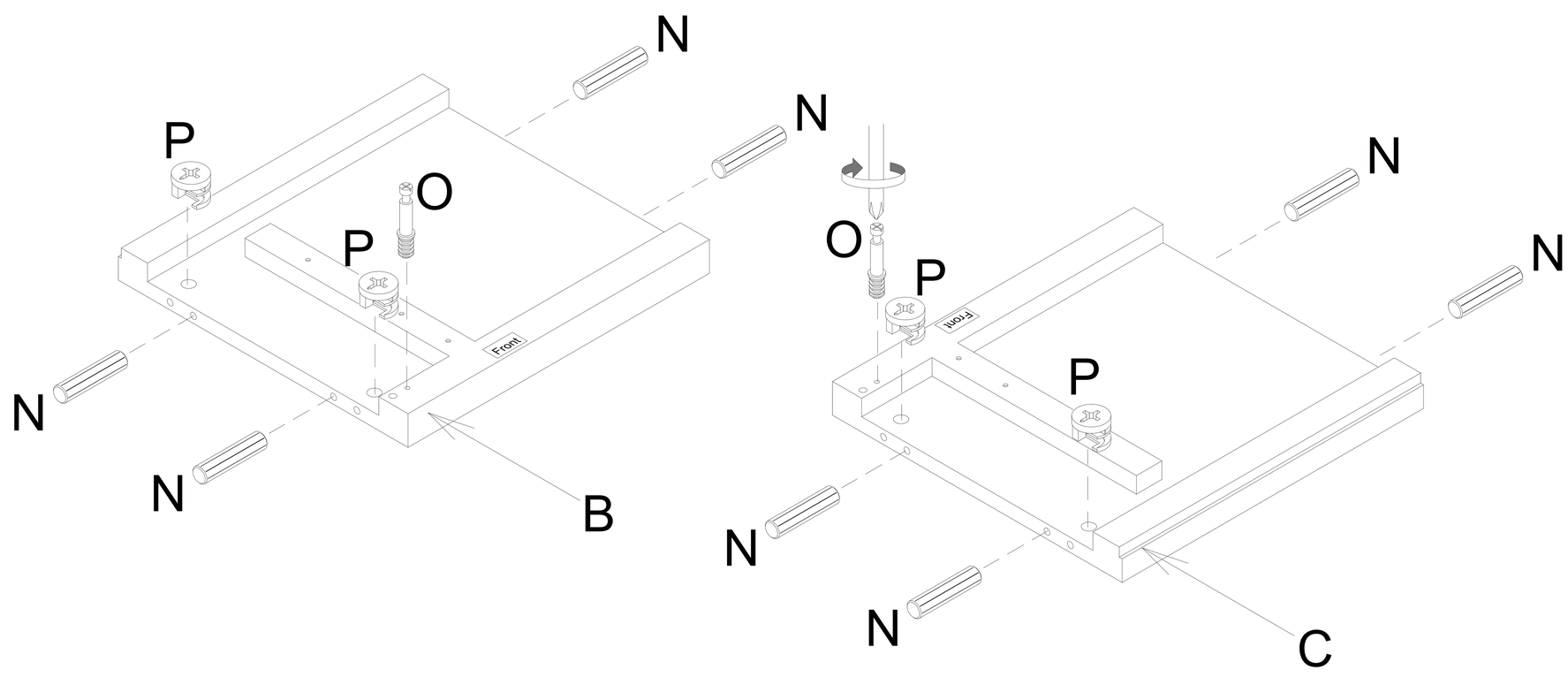

## 3 Insert Dowel (N) and Cam Lock (P) into the Center Bar (E).

NOTE : - Ensure the arrows on each Cam Lock (P) point towards the nearest edge with holes.

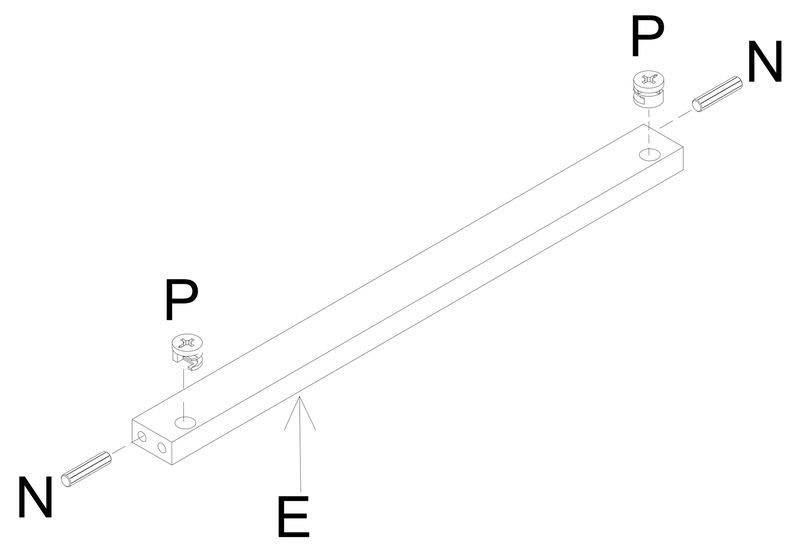


## 4 Disassemble Runner (L) into two parts. Attach the part with runner roller to the Left & Right Side Panel (B & C) using Screw (R) with a screwdriver (not provided). Attach the other part with slide to the Left & Right Drawer Side (G & H) (shown in Step 9).

NOTE : - Runner (L) should face the front of the panel.
- Assemble Screw (R) from the front of the runner, starting with $R^1$, $R^2$, then $R^3$.
- Ensure screws are installed vertically without tilting to fit properly into the holes.

EXTENSION RUNNER DISASSEMBLE STEPS:

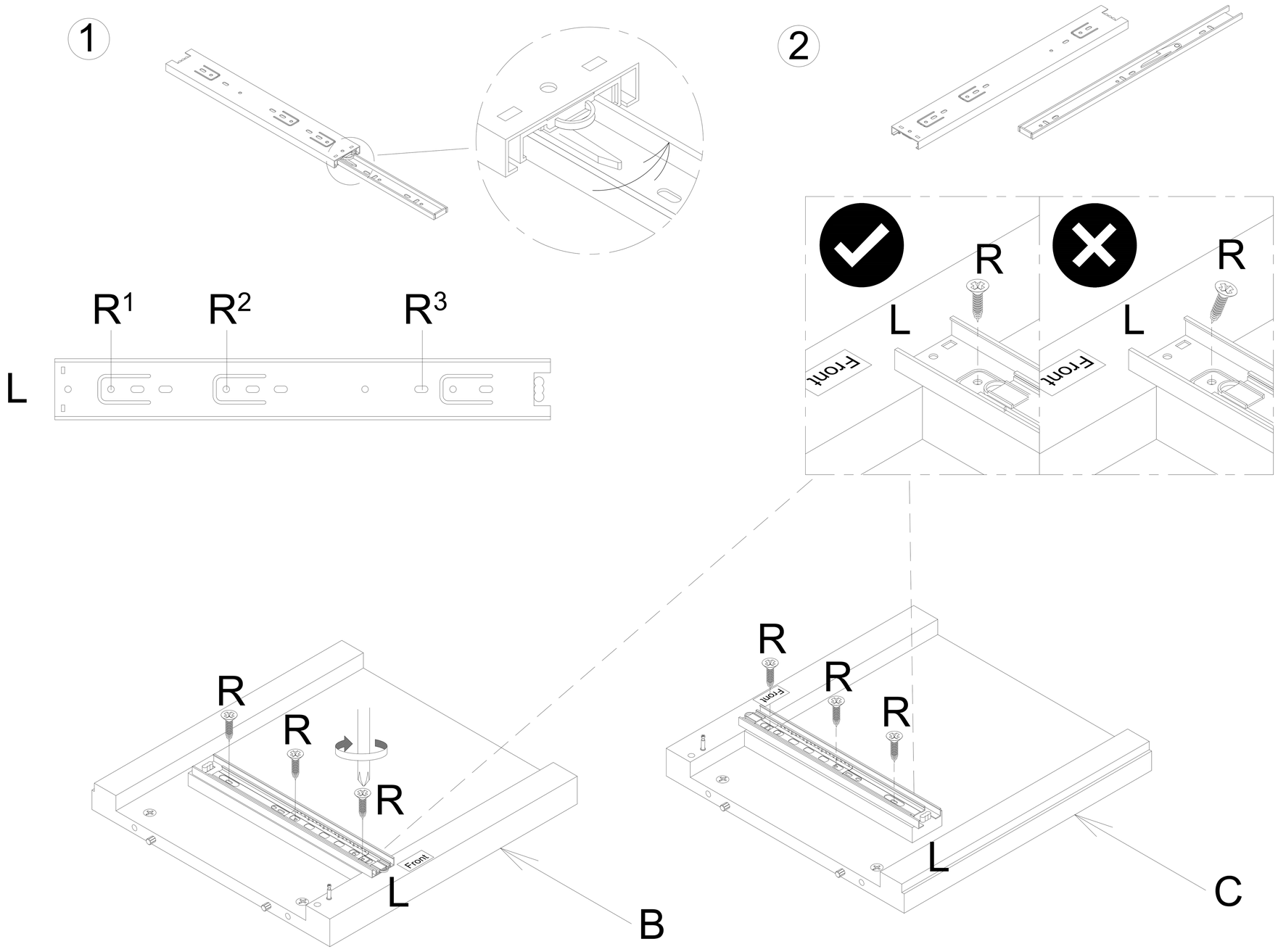

**5** Attach the Left & Right Side Panel (B & C) to the Center Bar (E) and secure the Cam Lock (P) with a screwdriver (not provided). Cover the Cam Lock (P) with Cam Lock Cover (Q).

NOTE : - Do not over tighten the Cam Lock (P).

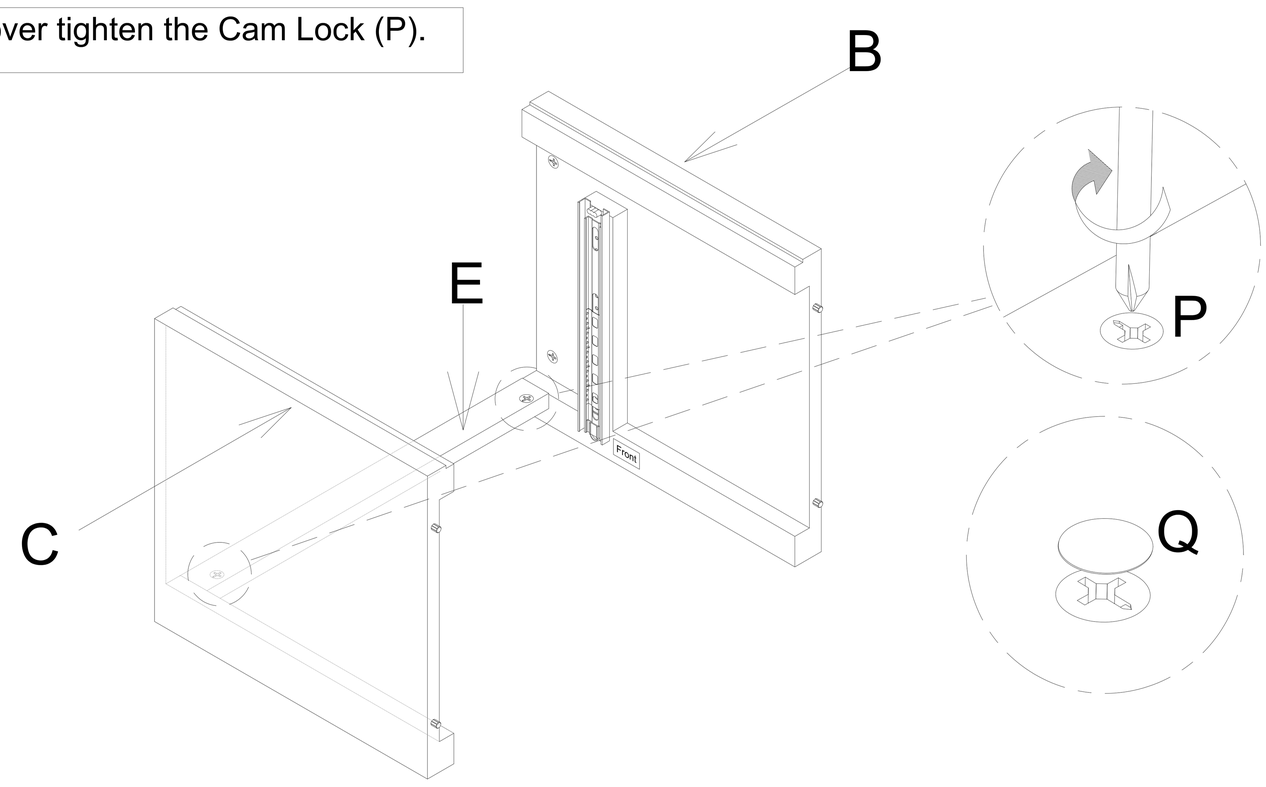


**6** Attach the Top Panel (A) to the Left & Right Side Panel (B & C) and secure the Cam Lock (P) with a screwdriver (not provided). Cover the Cam Lock (P) with Cam Lock Cover (Q).

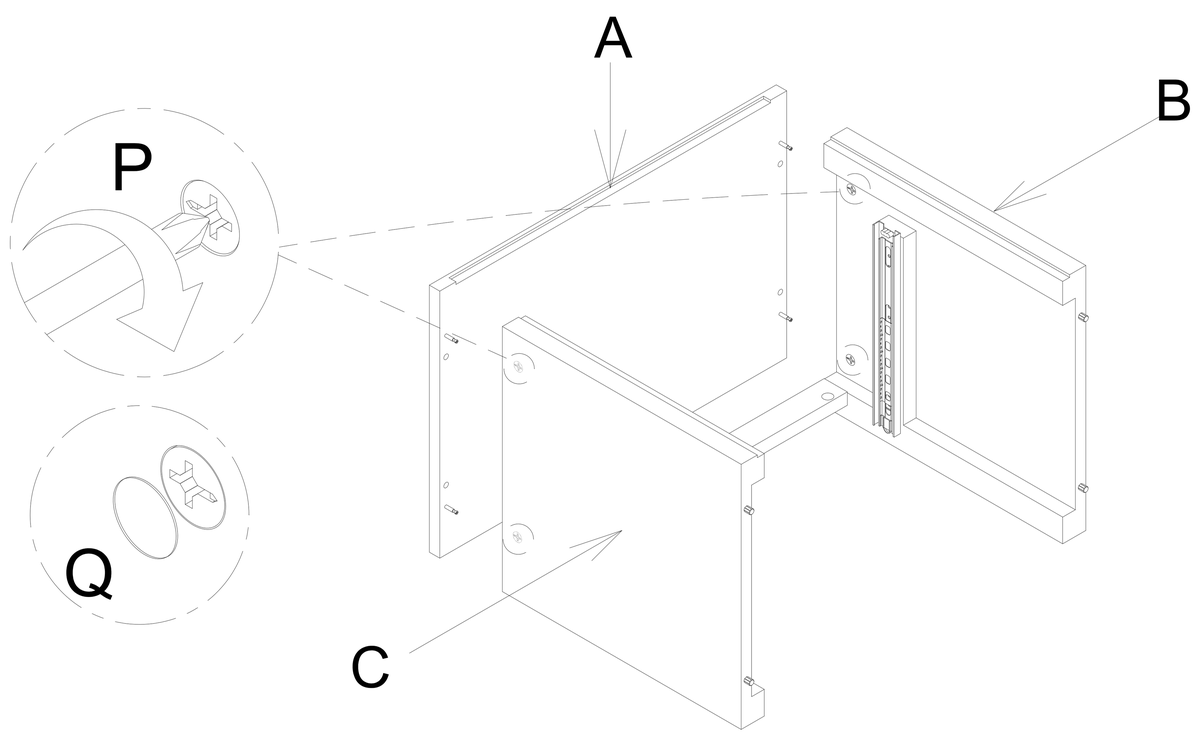


**7** Attach the Bottom Frame (D) to the Left & Right Side Panel (B & C) using Screw (S) with a screwdriver (not provided).

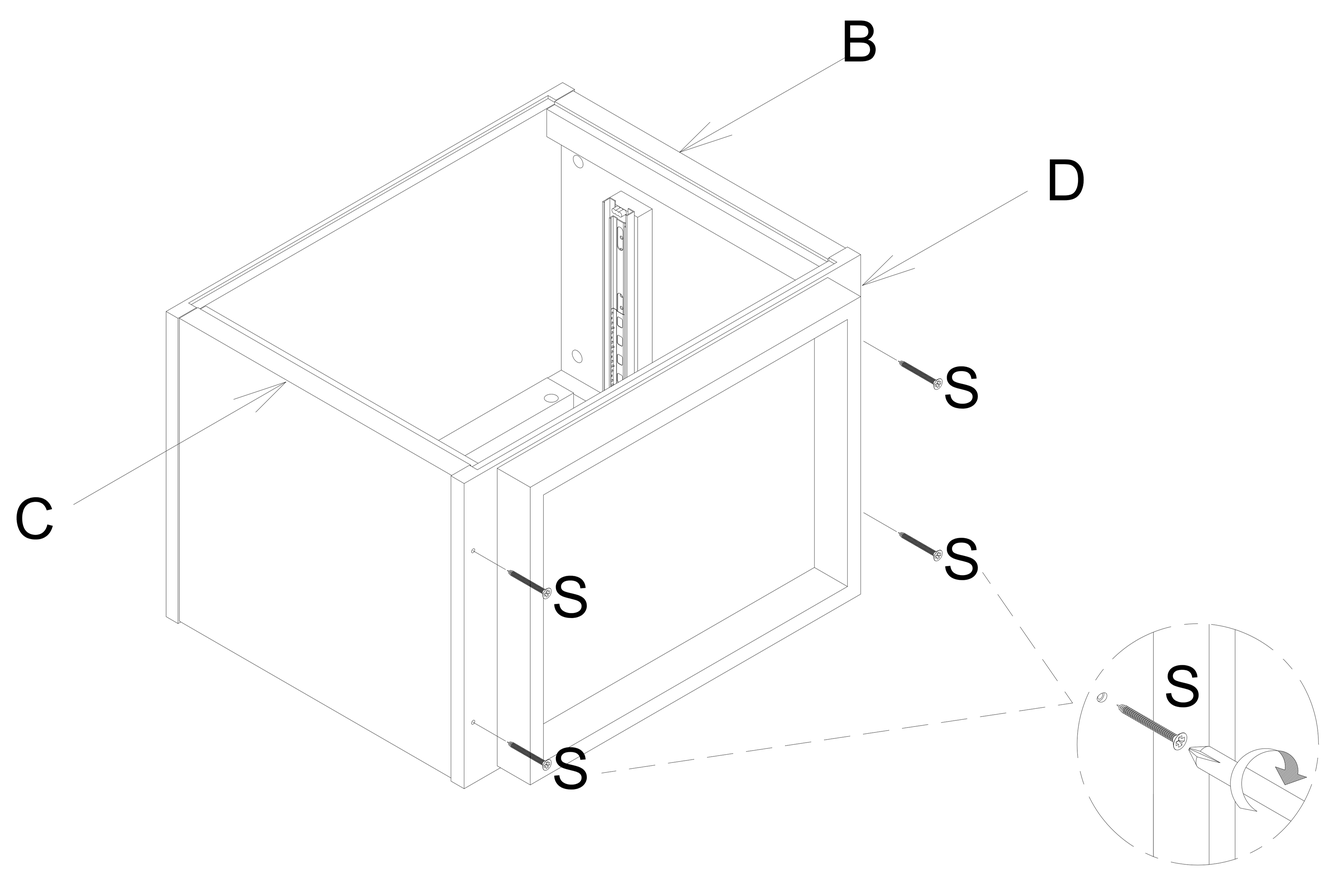

**8** Attach the Back Plywood (F) to the assembled unit using Panhead Screw (T) with a screwdriver (not provided).

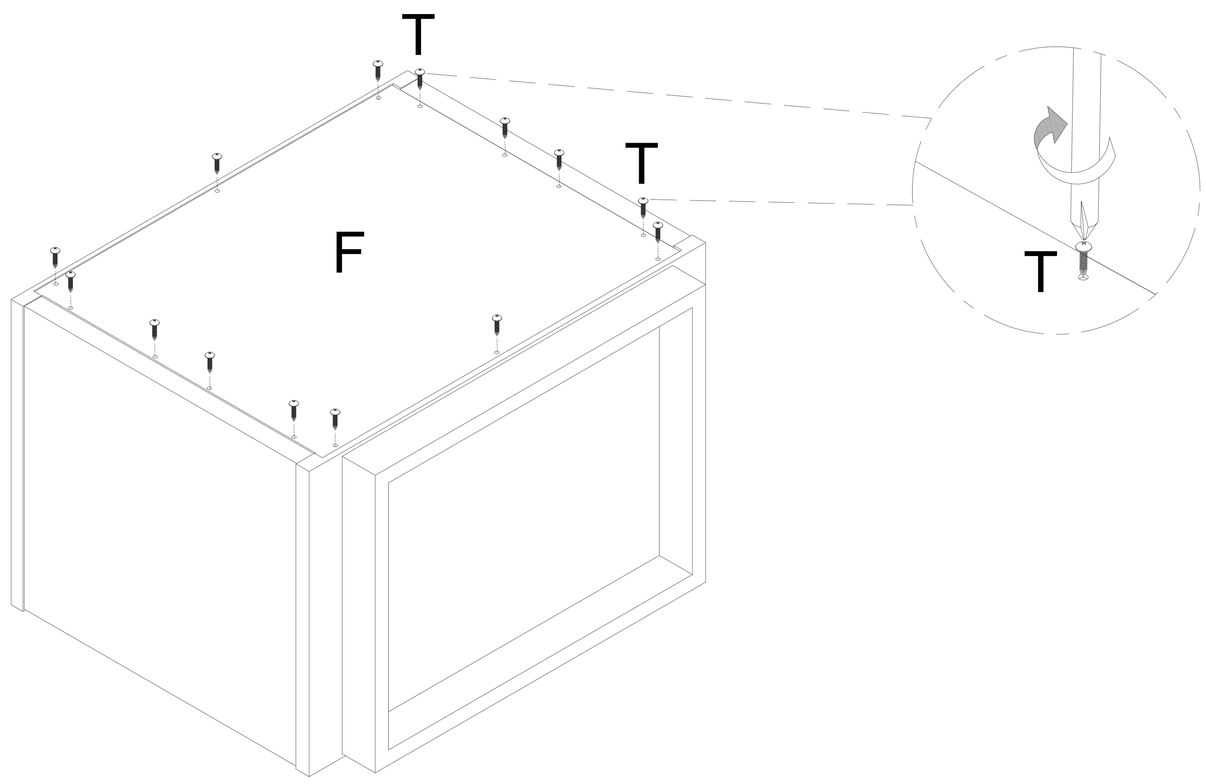


**9** Attach the Runner (L) to the Left & Right Drawer Side (G & H) using Screw (R) with a screwdriver (not provided).

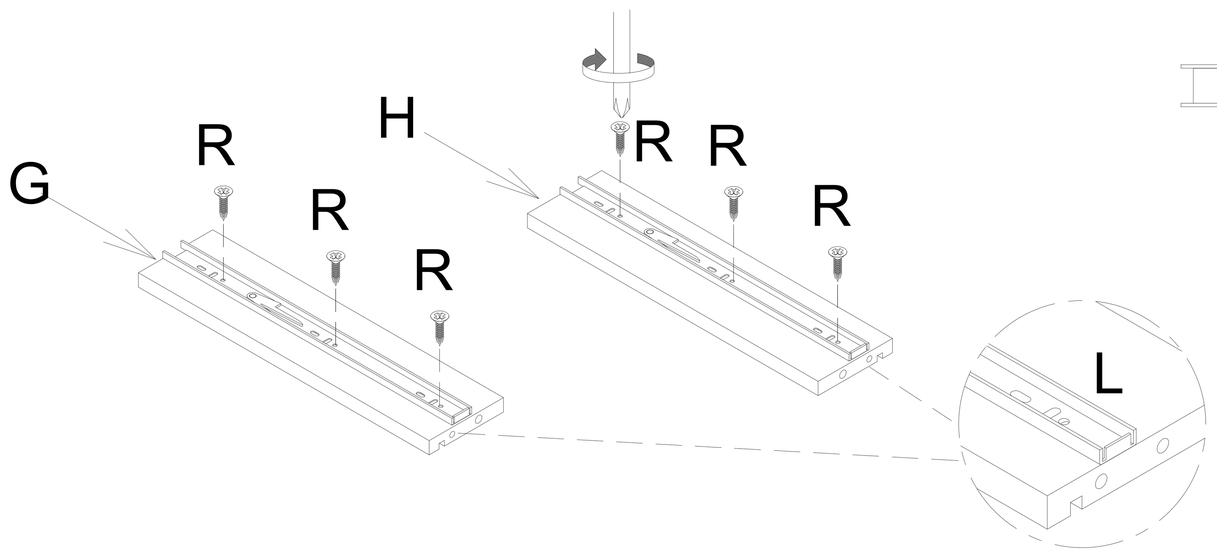


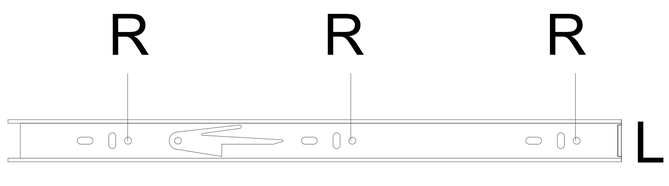


**10** Attach Dowel (M) and Cam Lock (P) to the Left & Right Drawer Side (G & H) and the Drawer Back (J). Attach Cam Bolt (O) to the Left & Right Drawer Side (G & H) and Drawer Front (I) with a screwdriver (not provided).

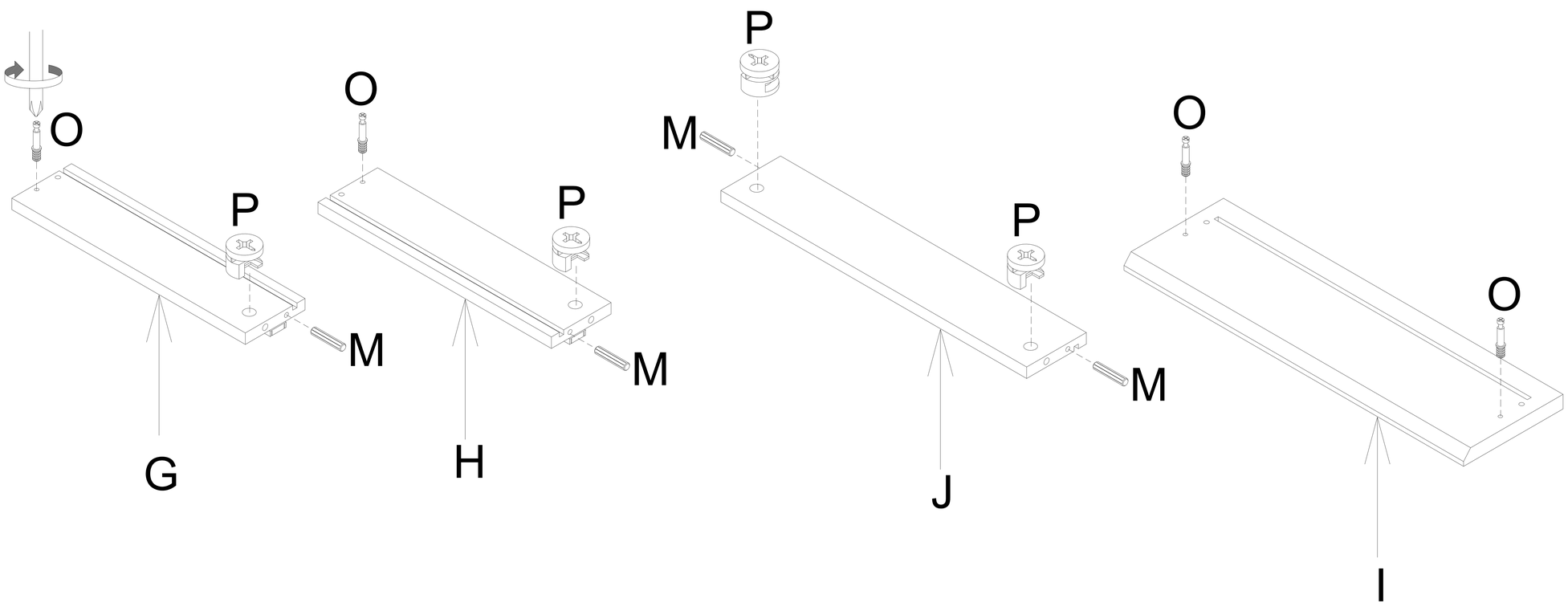

**11** Attach the Left & Right Drawer Side (G & H) to the Drawer Back (J) and secure the Cam Lock (P) with a screwdriver (not provided). Cover the Cam Lock (P) with Cam Lock Cover (Q).

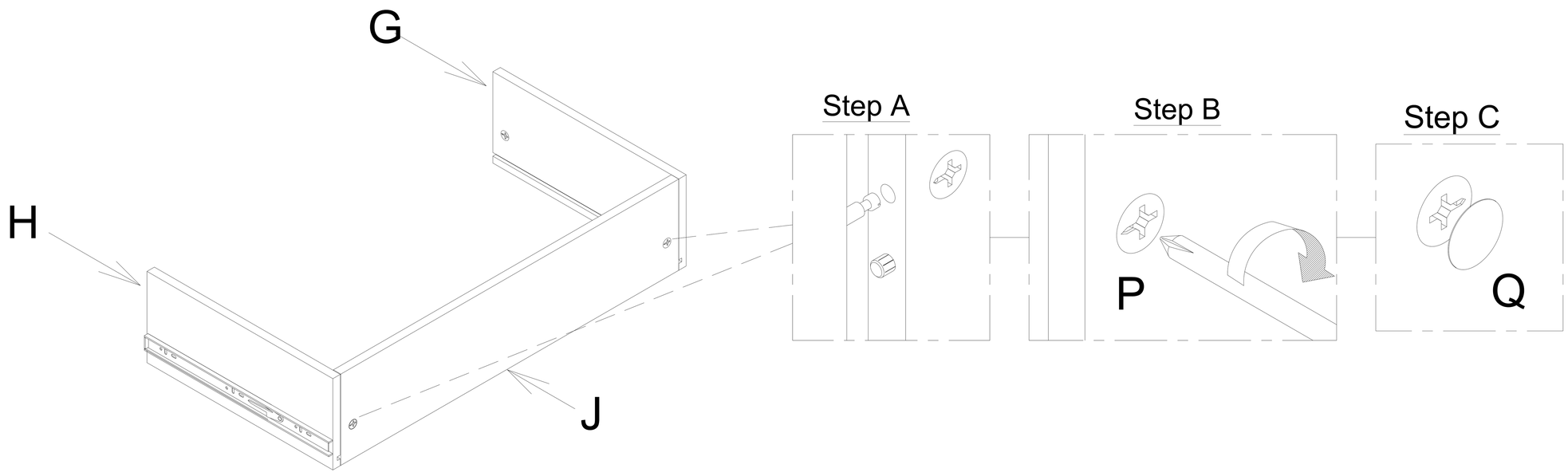


**12** Slot the Drawer Base (K) into the grooves of the drawer box. Attach the Drawer Front (I) to the drawer box and secure the Cam Lock (P) with a screwdriver (not provided). Cover the Cam Lock (P) with Cam Lock Cover (Q).

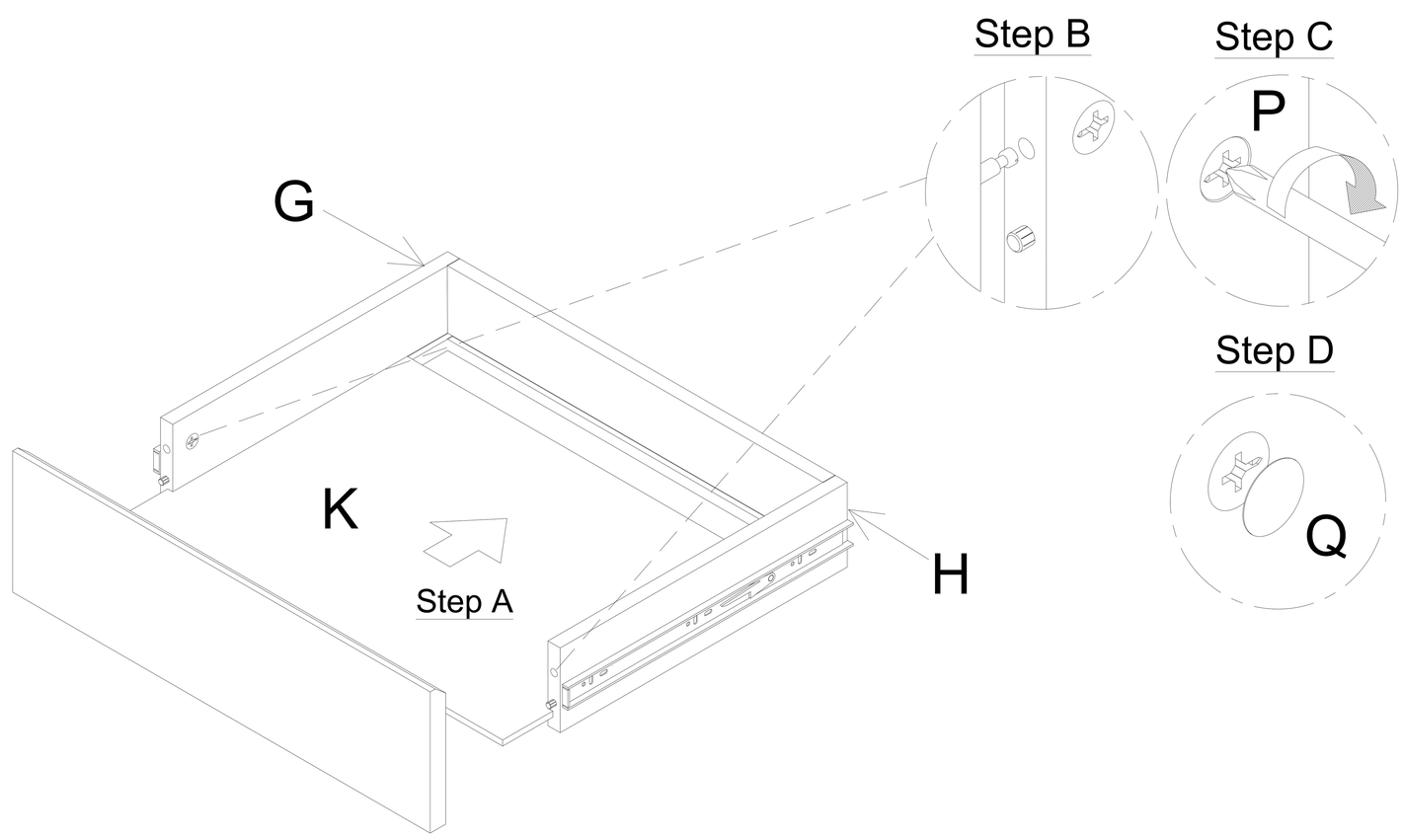

**13** Pull out the metal chrome plates from both sides of the Runner (L). Align the metal chrome plates with the slides on one drawer side, then repeat on the other side. If they are not aligned properly, remove and try again. Once both tracks are aligned correctly, slowly push the drawer all the way in.

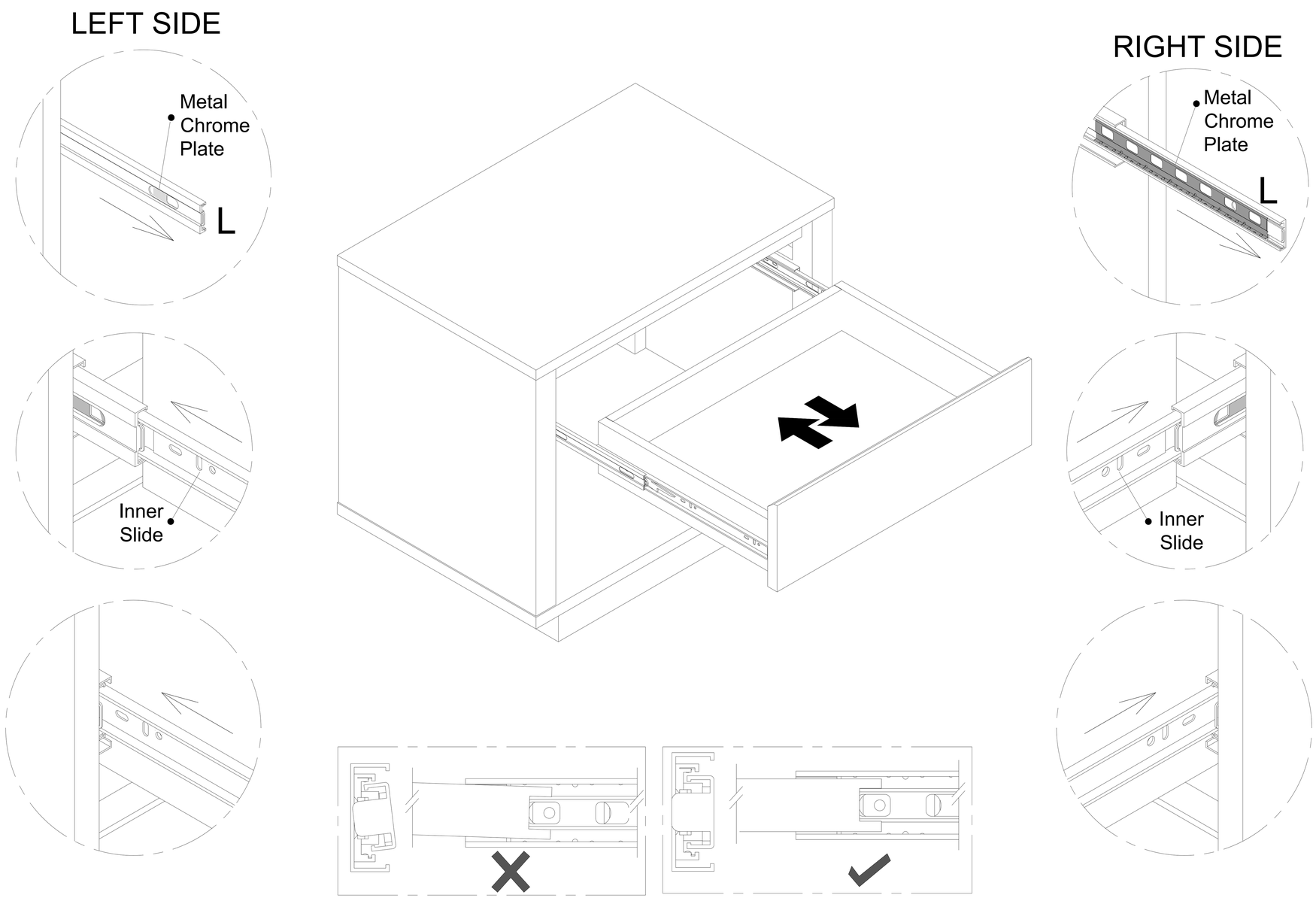


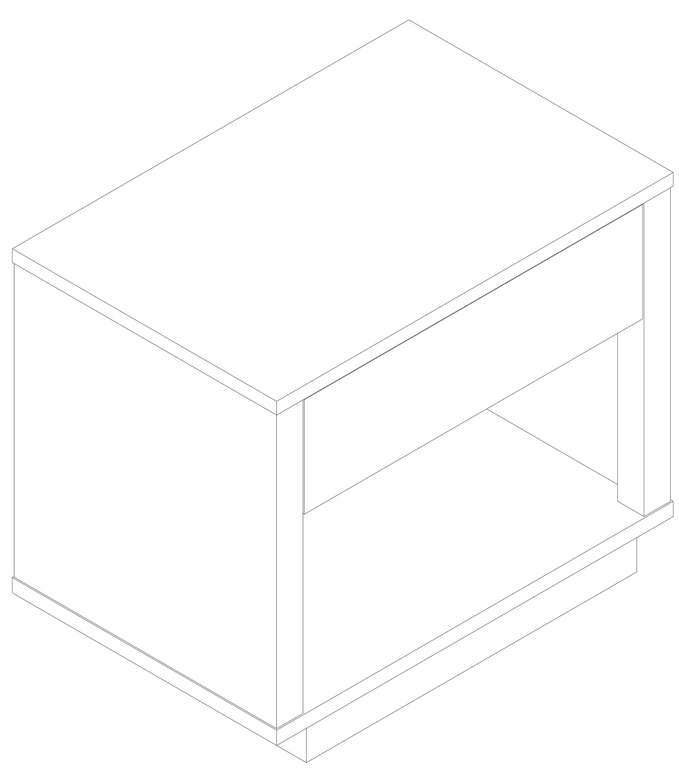

**Cleaning & Care**

Treat surfaces with care. Surfaces are resistant to scratches but are not scratch resistant. Clean surfaces with a dry or damp soft cloth. Do not use abrasive cleaners. Hardware may loosen over time. Periodically check that all connections are tight.