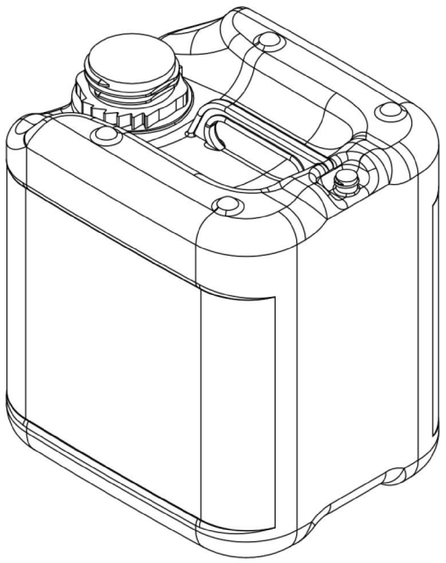

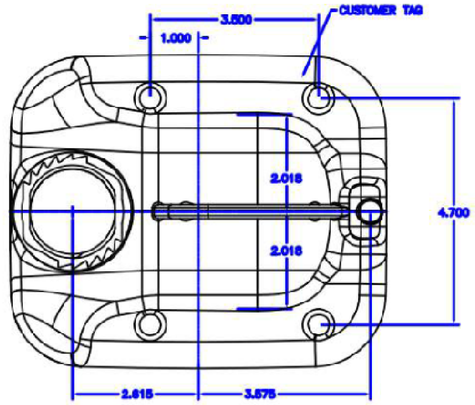

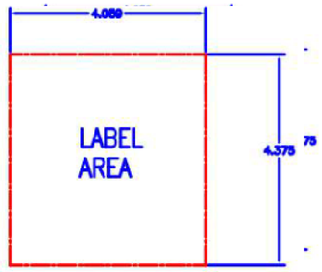

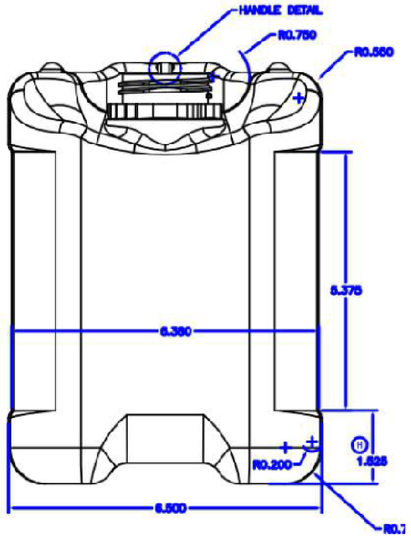

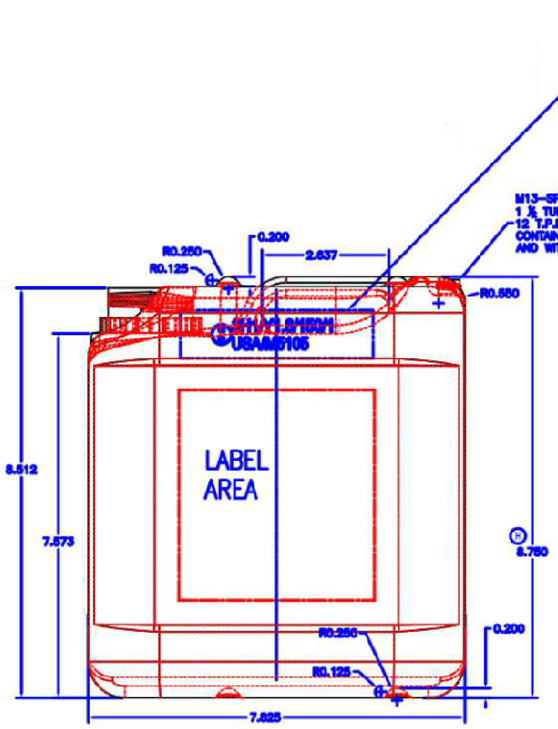

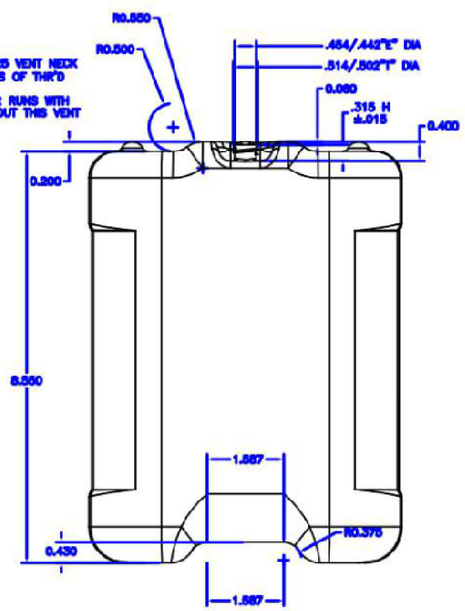

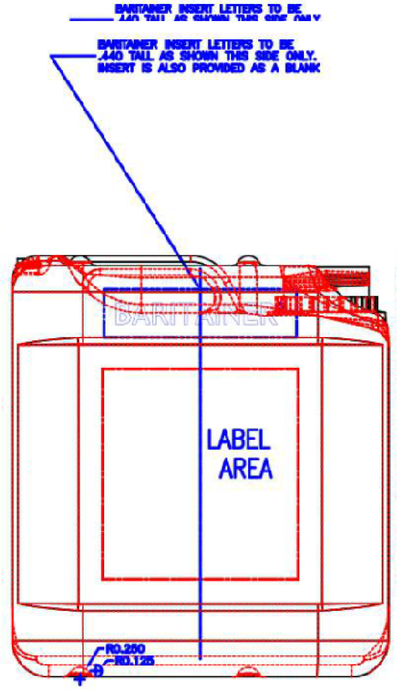

5 LITER NOTES:
1. DO NOT SCALE DRAWING
2. FINISH: AS SHOWN
3. MATERIAL: H.D.P.E.
4. DRAW WT: 170 ± 10 GR
5. APPROX. OVERFLOW CAPACITY: 5165.17 ± 50.0 cc
6. STANDARD S.P.I. TOLERANCES APPLY TO ALL BODY DIMENSIONS.

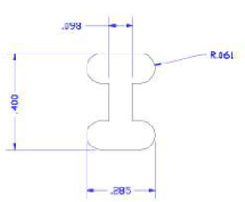

HANDLE DETAIL 5 X SCALE

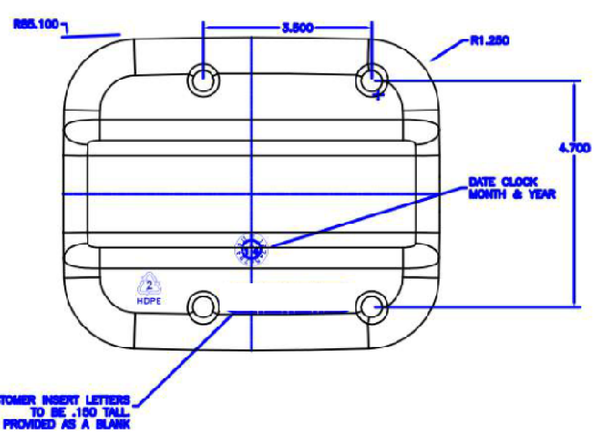

DISCLAIMER

THIS INFORMATION IS PROVIDED AS A GENERAL GUIDE, INCLUDING DIMENSIONS. IT IS THE CUSTOMER'S RESPONSIBILITIES TO SELECT THE PROPER CONTAINER FOR PRODUCT AND APPLICATION COMPATIBILITY.

DISTRIBUTED BY: Pipeline Packaging

REF NO.: DWG31044

DESCRIPTION: 5 Liter White HDPE TH Square Pail