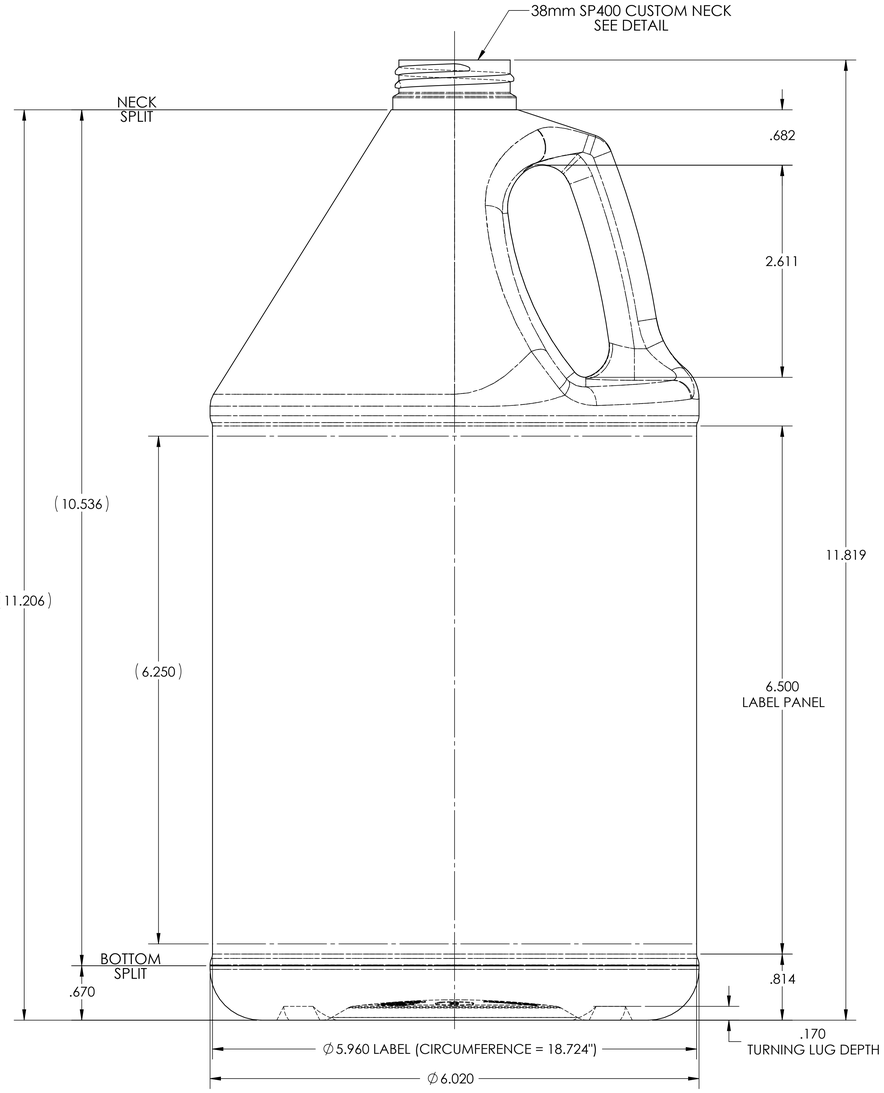

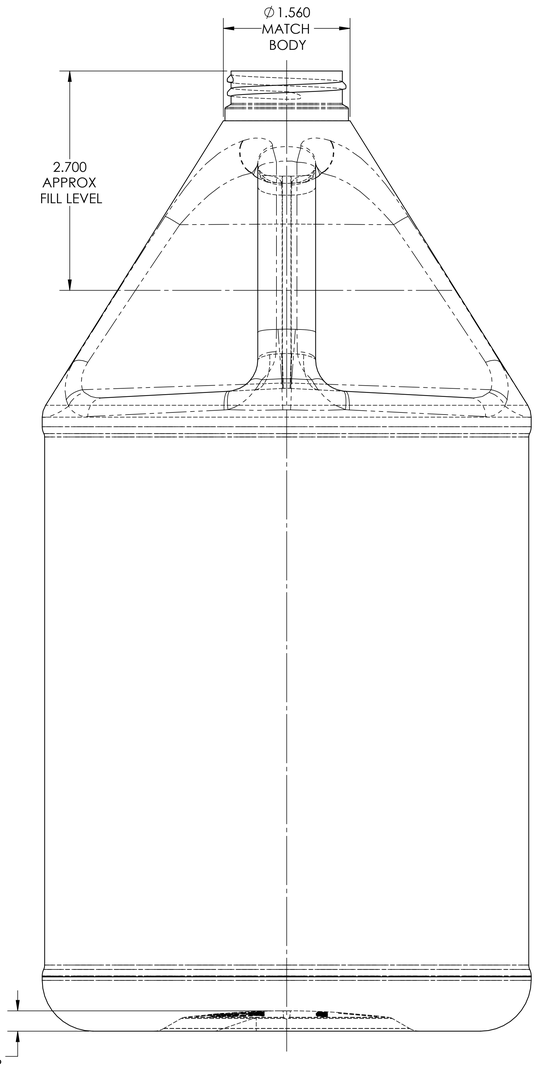

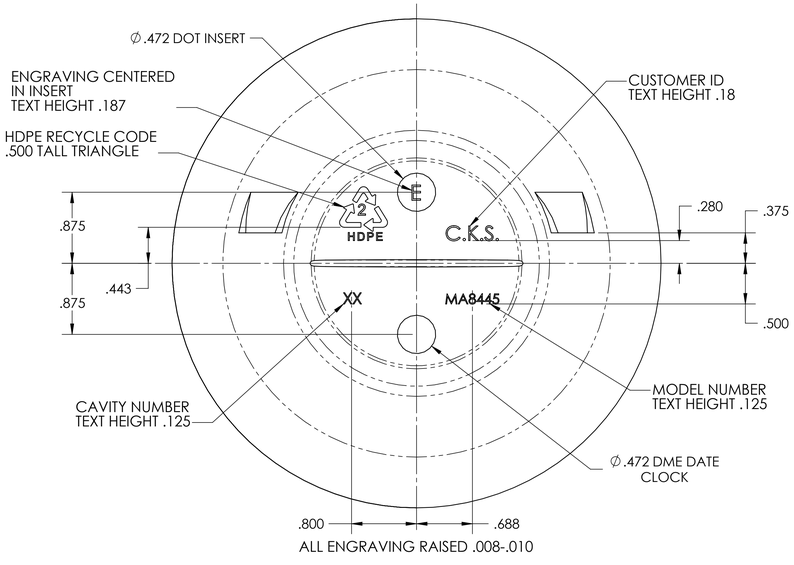

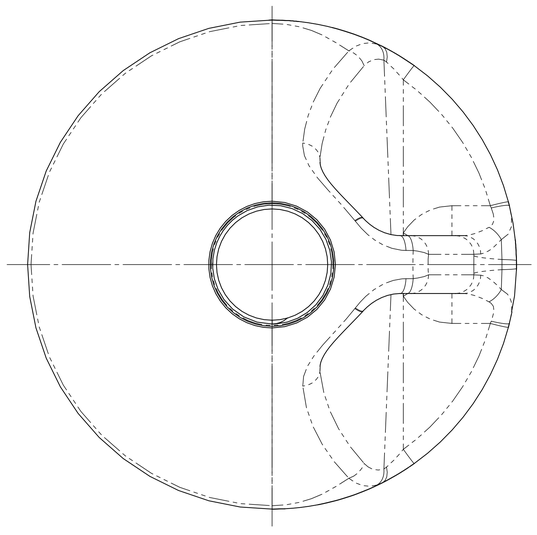

TOP VIEW

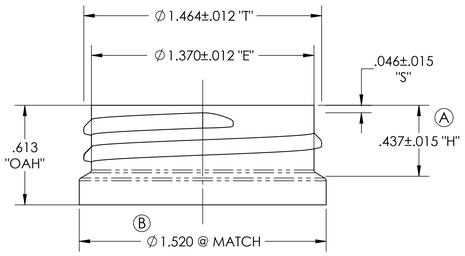

38mm SP400 CUSTOM

THREAD NOTES:
1. 6 THREADS PER INCH
2. 1-1/4 TURNS OF FULL THREAD
3. "M" STYLE THREAD PROFILE
4. THREAD START 90° TO P/L IN PIN HALF

Notes:
1) Tolerances Unless Specified:
Vertical -- ±.080
Horizontal -- ±.090
Volumetric -- ±1.50 oz
2) Bottles to be Checked Aged with 20°C water
3) Minimum Wall Thickness of 0.015"

Container Data:	
Weight	100-140 grams
Fill Level	128.0 oz.
Overflow	Dependent on bottle gram weight
Material	HDPE

DISCLAIMER

This specification does not relieve the customer of their ultimate responsibility for the determination of the appropriate container. It is the customer's responsibility to select the appropriate packaging based upon all information at their disposal including the specific application, regulatory compliance, product compatibility and shipping requirements. WE HEREBY DISCLAIM AND EXCLUDE ANY EXPRESS OR IMPLIED WARRANTIES, INCLUDING WITHOUT LIMITATION THE IMPLIED WARRANTIES OF MERCHANTABILITY AND FITNESS FOR A PARTICULAR PURPOSE.

DISTRIBUTED BY: Pipeline Packaging

REF NO.: DWG-Q1769

DESCRIPTION:
128 OZ WHITE/WHITE HDPE INDUSTRIAL ROUND 38-400 4X1
130 GRAM KRAFT CARTON 4G/Y24.0/S FLUORINATED LEVEL 3