HARRISON ADJUSTABLE RADIATOR COVER ASSEMBLY INSTRUCTIONS

Thank you for purchasing the HARRISON ADJUSTABLE RADIATOR COVER .Please read the instructions carefully to ensure safe operation of the product.

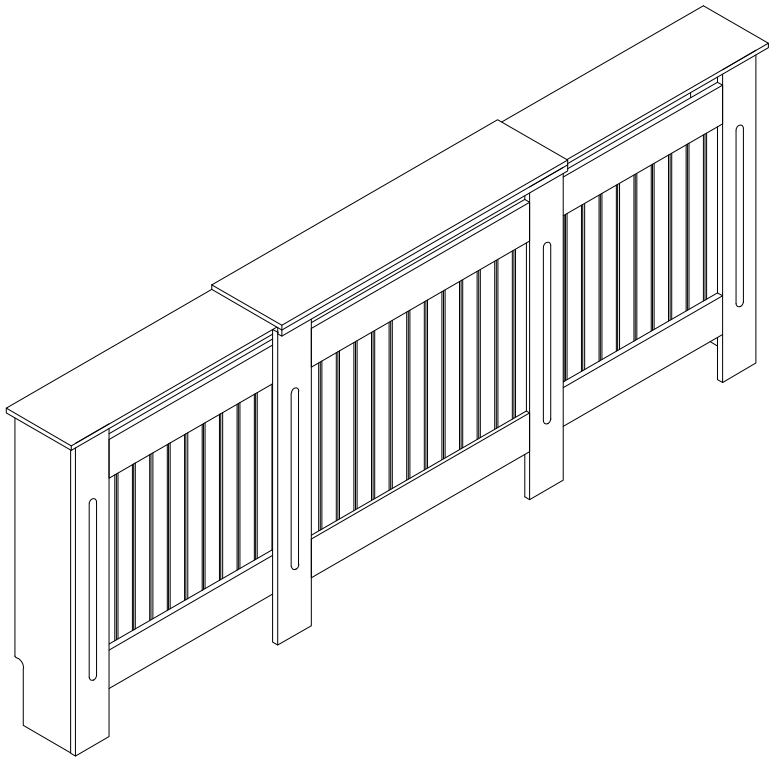

Size:Maximum L209xW19xH83cm
Minimum L151.8xW19xH83cm

PLEASE READ this sheet prior to assembly to familiarise yourself with the various stages of construction.

Carefully open the pack supplied and check the contents against the parts and fittings check list. Do not destroy any of the packaging until you are certain that you have all the necessar y parts for the assembly.

CAUTION: There are small components used in the construction of this unit. These loose items should be kept away from young children whilst assembling your unit to avoid the danger of choking hazards.

Tool Required

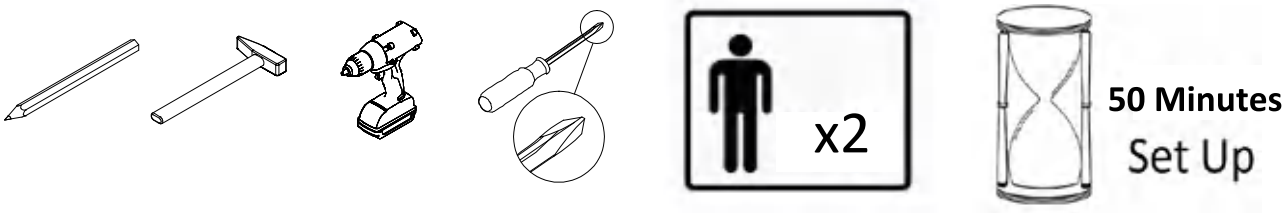

HARRISON ADJUSTABLE RADIATOR COVER ASSEMBLY INSTRUCTIONS

Fully closed size:

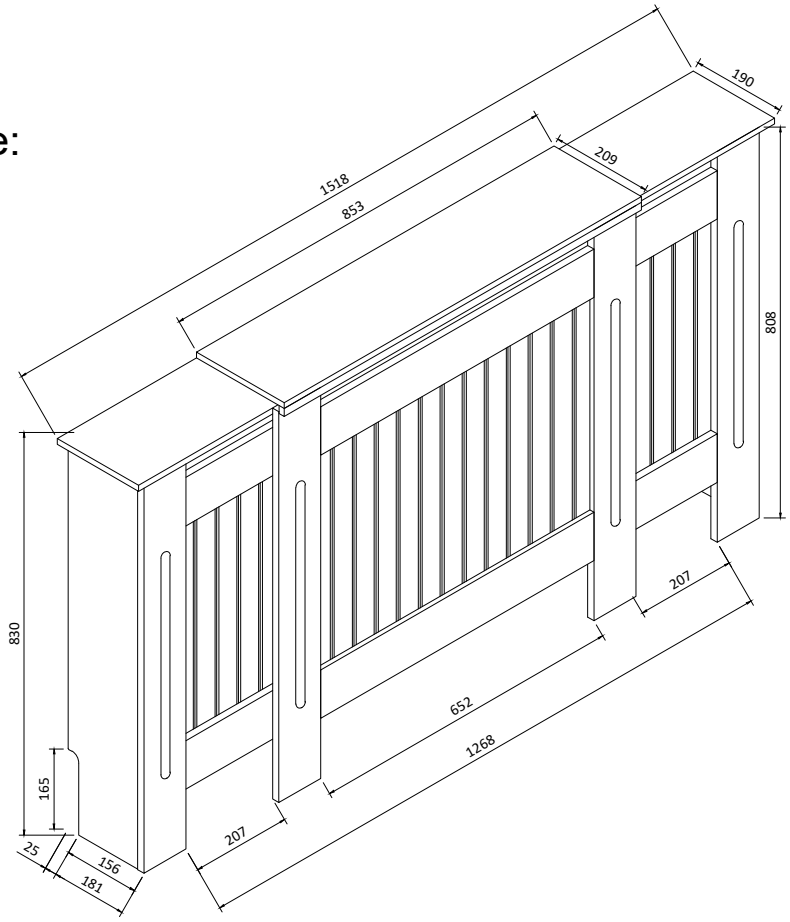

Fully extended size:

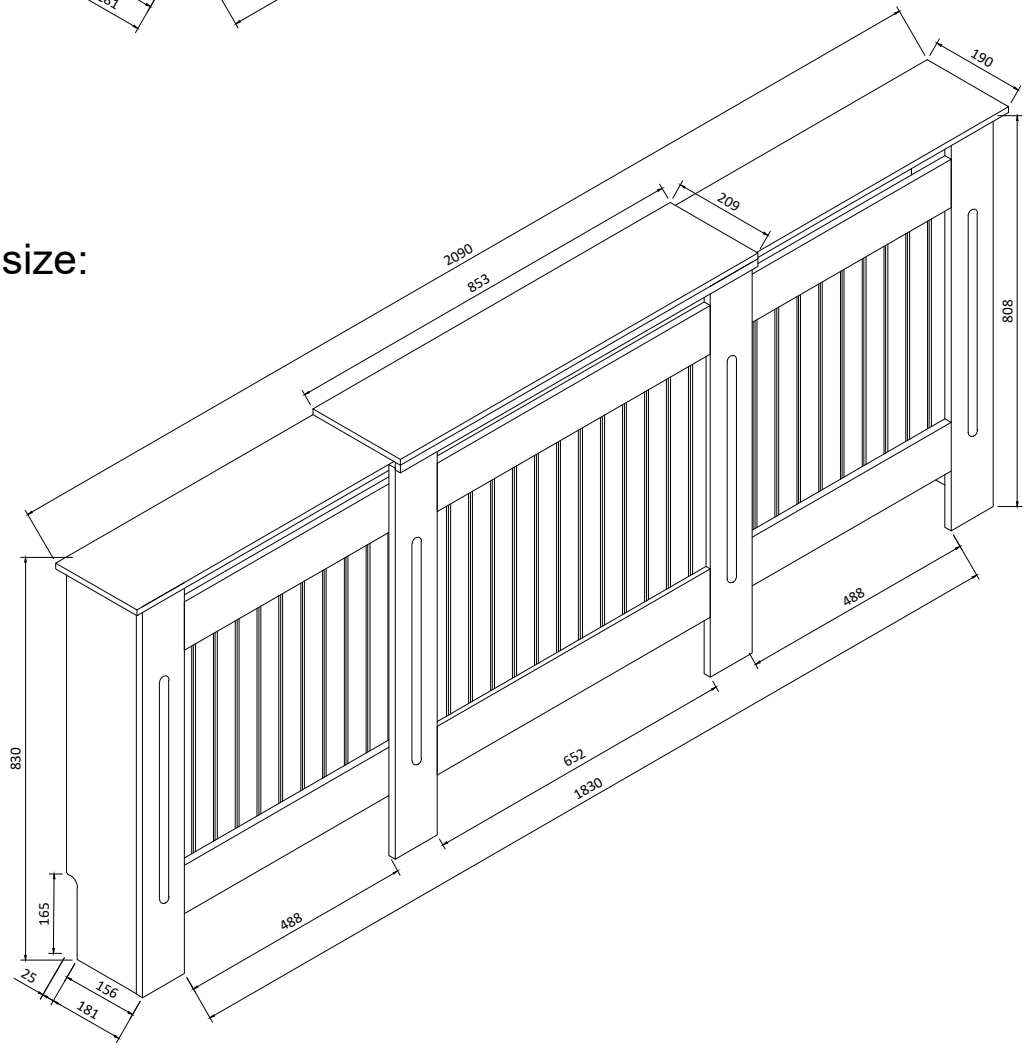

HARRISON ADJUSTABLE RADIATOR COVER ASSEMBLY INSTRUCTIONS

IMPORTANT - READ CAREFULLY - RETAIN THESE INSTRUCTIONS FOR FUTURE REFERENCE.

INFORMATION

This product is designed to hold a combined weight of 5KG across the whole top. Do not exceed this weight

Due to the size of this product we recommend that it is assembled in the room intended for use.
When you are ready to start, make sure that you have the right tools, plenty of space and a clean, dry area for assembly.
Unwrap all packaging materials and place the components on top of the carton box or on a clean floor to prevent it from scratching.
Check the pack and make sure you have all the parts listed .
Ensure that this product is fully assembled as illustrated before use.
Check all screws or bolts are tightened and inspect regularly.
This product should only be used on firm, level ground.
Keep small parts out of reach of children.
Make sure the legs remain in contact with the ground.
Tools not included.

WARNINGS

DO NOT use power tools to construct this product.
DO NOT over tighten screws or bolts.
DO NOT use this product if parts are missing, damaged or worn.
DO NOT stand on the product.
DO NOT place very hot or very cold items on the surface unless adequately thick table mats are use to prevent such items damaging your table top.
We recommend the use of the wall brackets provided for safety reasons.
The wall plugs provided are for a solid wall only. Suitable fixings for your wall type must be obtained separately.
If in doubt please consult a qualified trade person.
Always ensure the area to be drilled is free from hidden electrical wires, water and gas pipes.

CARE INFORMATION

Never use scourers, abrasives or chemical cleaners.

To clean wipe with a sponge and warm soapy water. Do not use solvent based cleaners or detergents as they can bleach or damage the product.

HARRISON ADJUSTABLE RADIATOR COVER ASSEMBLY INSTRUCTIONS

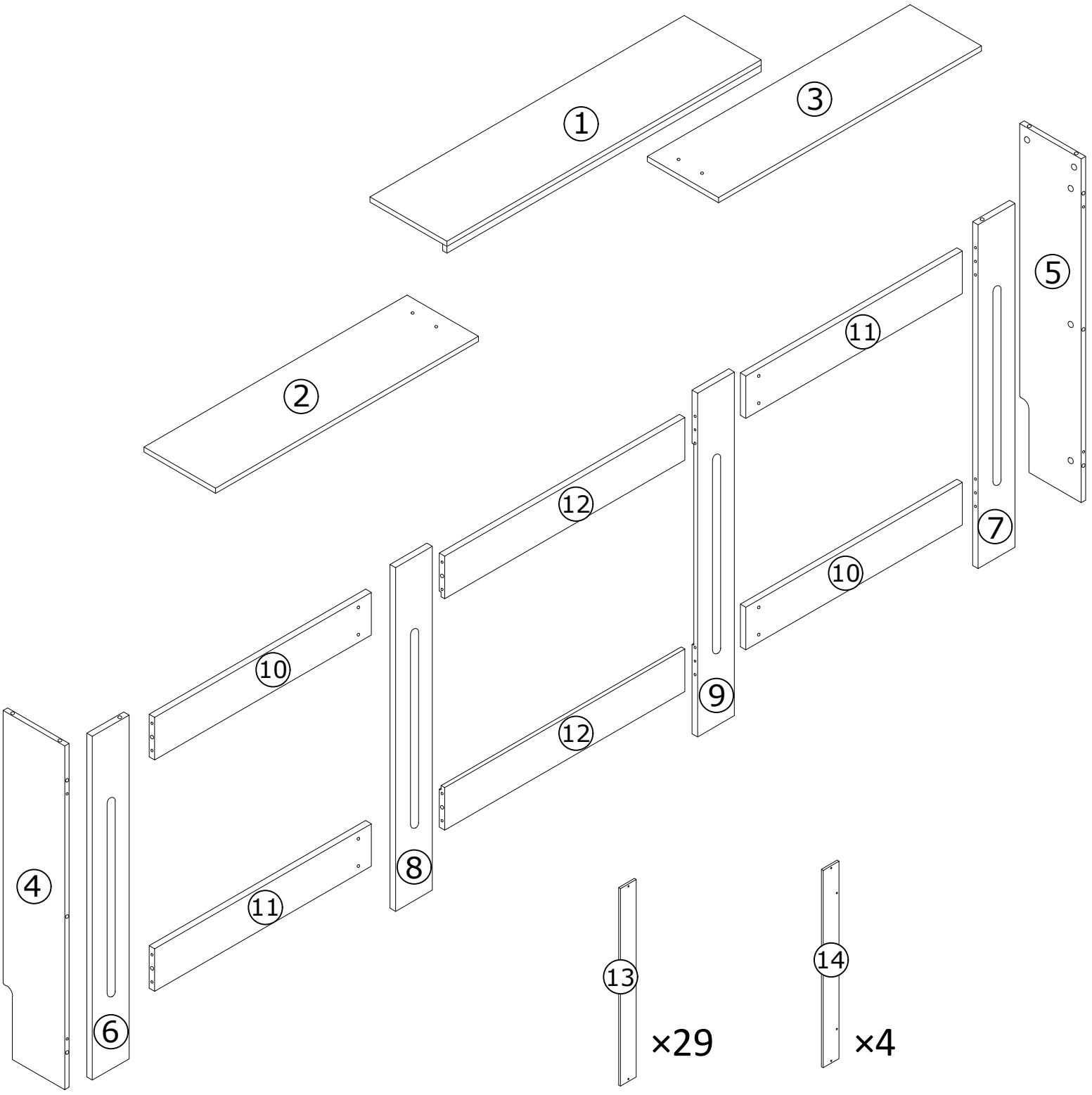

Parts

① 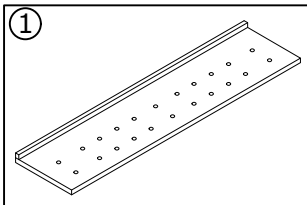	② 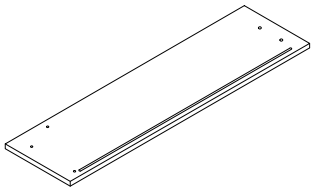	③ 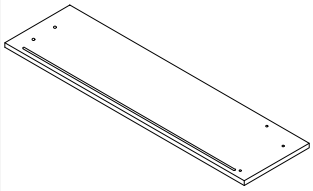	④ 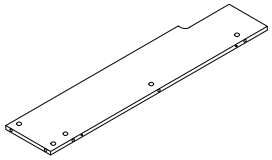
Description: Top panel Qty: 1PC	Description: Left Top panel Qty: 1PC	Description: Right Top panel Qty: 1PC	Description: Left Side panel Qty: 1PC
⑤ 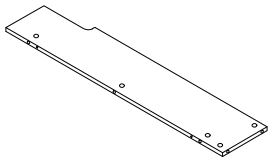	⑥ 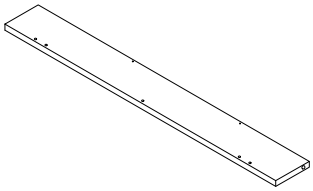	⑦ 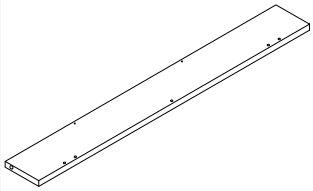	⑧ 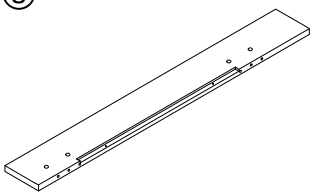
Description: Right Side panel Qty: 1PC	Description: Left Front panel Qty: 1PC	Description:Right Front panel Qty: 1PC	Description: Middle Front panel(Left) Qty: 1PC
⑨ 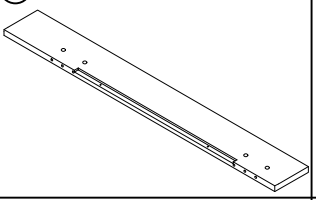	⑩ 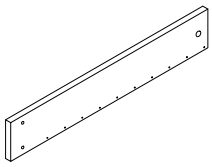	⑪ 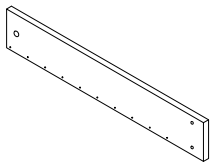	⑫ 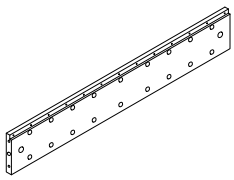
Description: Middle Front panel(Right) Qty: 1PC	Description:Horizontal panel Qty: 2PCS	Description:Horizontal panel Qty: 2PCS	Description: Middle Horizontal panel Qty: 2PCS
⑬ 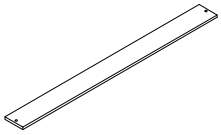	⑭ 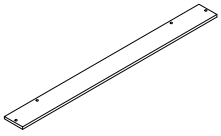		
Description:Slats Qty: 29PCS	Description:Slats Qty: 4PCS		

Fittings(to scale)

Ref	Dimensions	Qty
A	Cam bolt（6x35mm）	20
B	Wood dowel（6x30mm）	20
C	Cam（15x10mm）	20
D	Screw（5x12mm）	74
E	Screw（6x20mm）	4
F	Screw（6x27mm）	4
G	Screw（4x40 mm）	4
H	Screw（6x25mm）	4

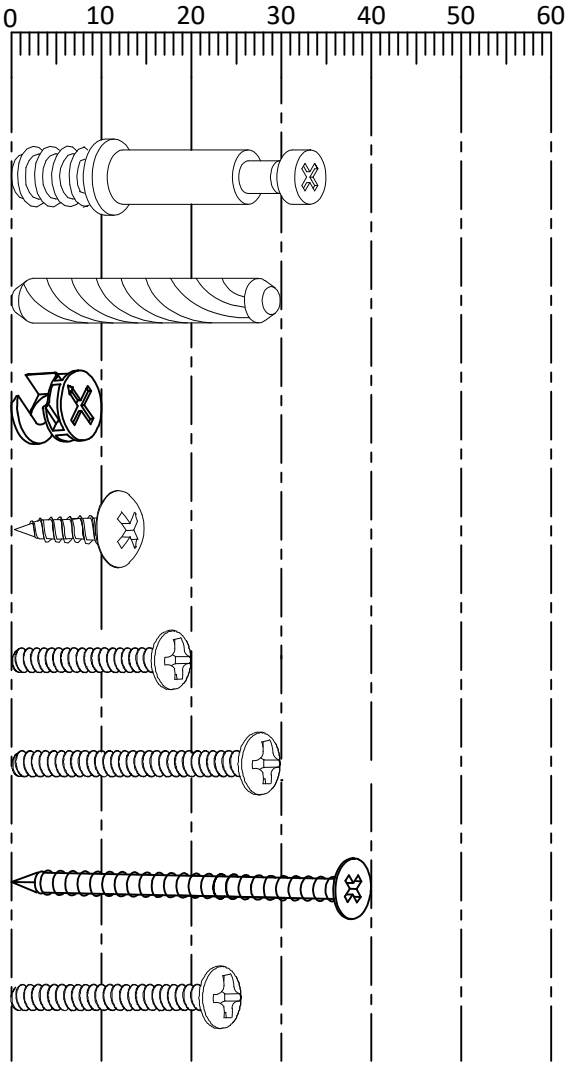

(Not to scale)

I	Wall plug	4
J	Wall Bracket	2
K	L-shaped bracket	2

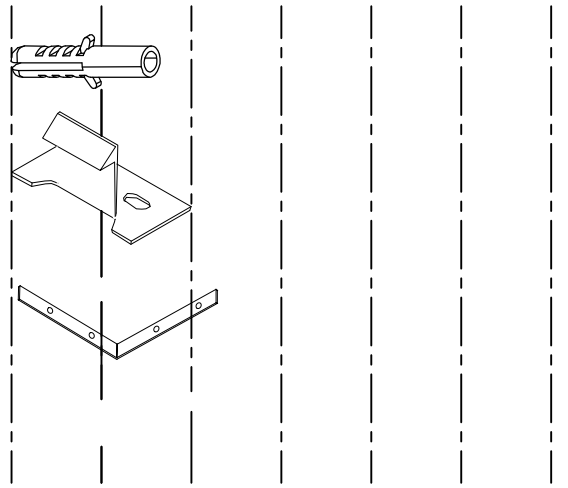

Layout Parts on Soft Surface

Lay out all parts on a soft surface i.e. Rug, Carpet or Packaging Carton

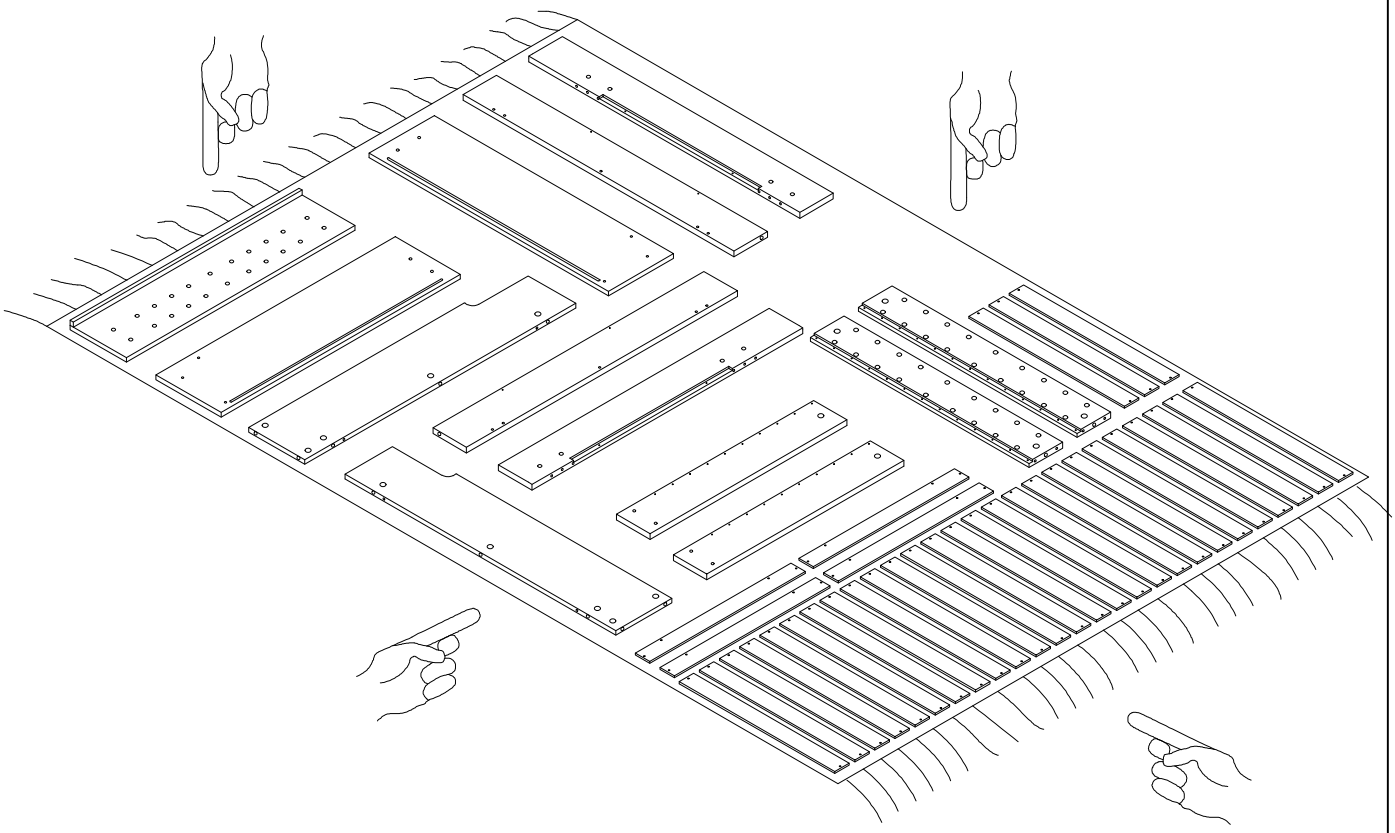

CAUTION:There are many small components used in the construction of this product.
Please keep these components away from young children whilst assembling this product.
If you keep the fittings in a bowl during assembly you will be less likely to lose them!

HARRISON ADJUSTABLE RADIATOR COVER ASSEMBLY INSTRUCTIONS

STEP 1	Parts Required
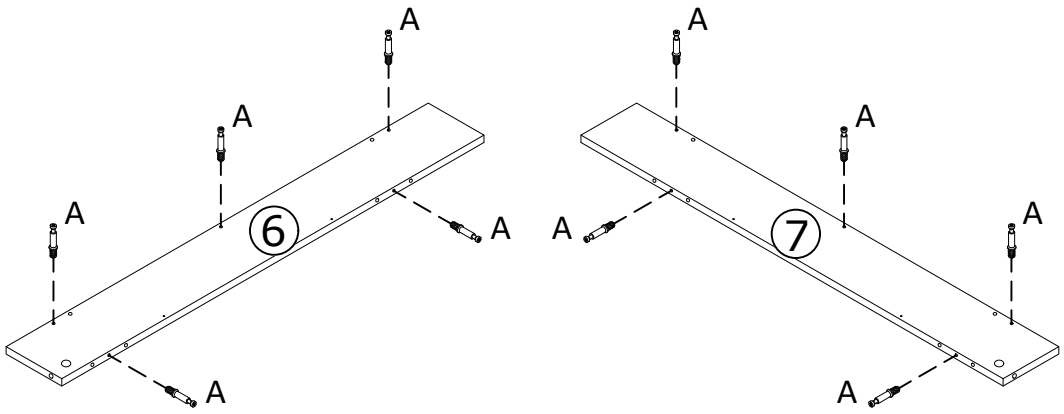	⑥ Left Front panel ×1 ⑦ Right Front panel ×1 A Cam bolt（6x35mm）×10

STEP 2	Parts Required
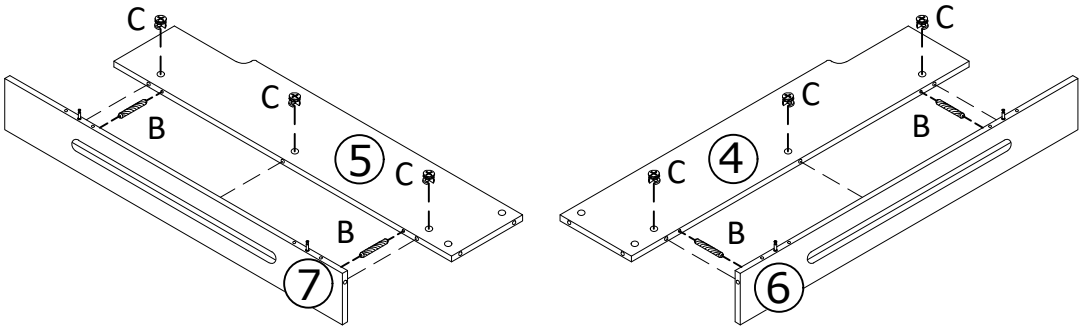	④ Left Side panel ×1 ⑤ Right Side panel ×1 B Wood dowel（6x30mm）×4 C Cam（15x10mm）×6

HARRISON ADJUSTABLE RADIATOR COVER ASSEMBLY INSTRUCTIONS

STEP 3

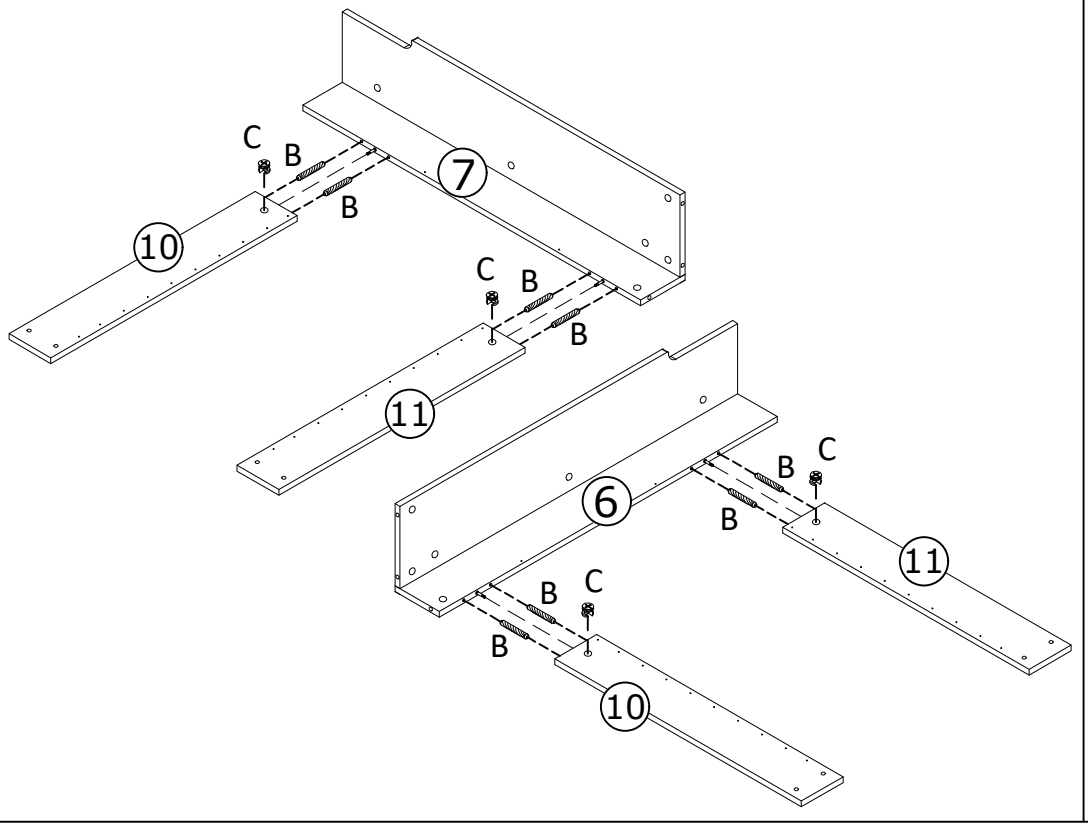

Parts Required

⑩ Horizontal panel×2
⑪ Horizontal panel×2

B Wood dowel（6x30mm）×8
C Cam（15x10mm）×4

STEP 4

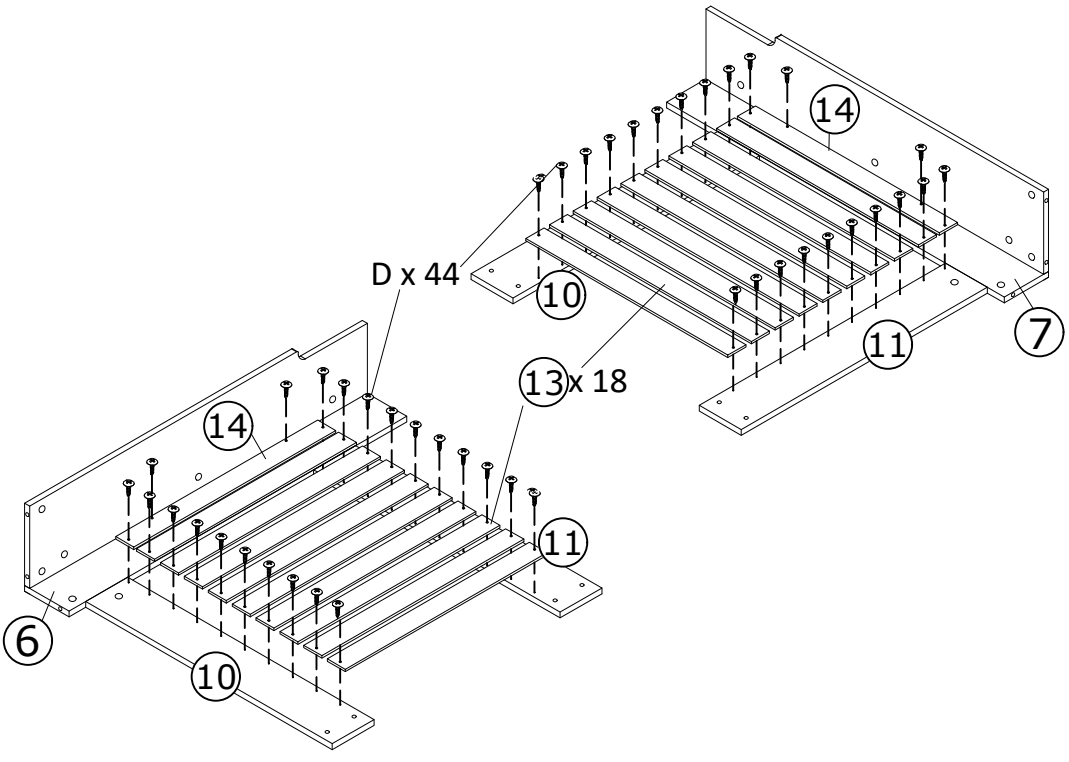

Parts Required

⑬ Slats ×18
⑭ Slats ×2

D Screw（5x12mm）×44

HARRISON ADJUSTABLE RADIATOR COVER ASSEMBLY INSTRUCTIONS

STEP 5	Parts Required
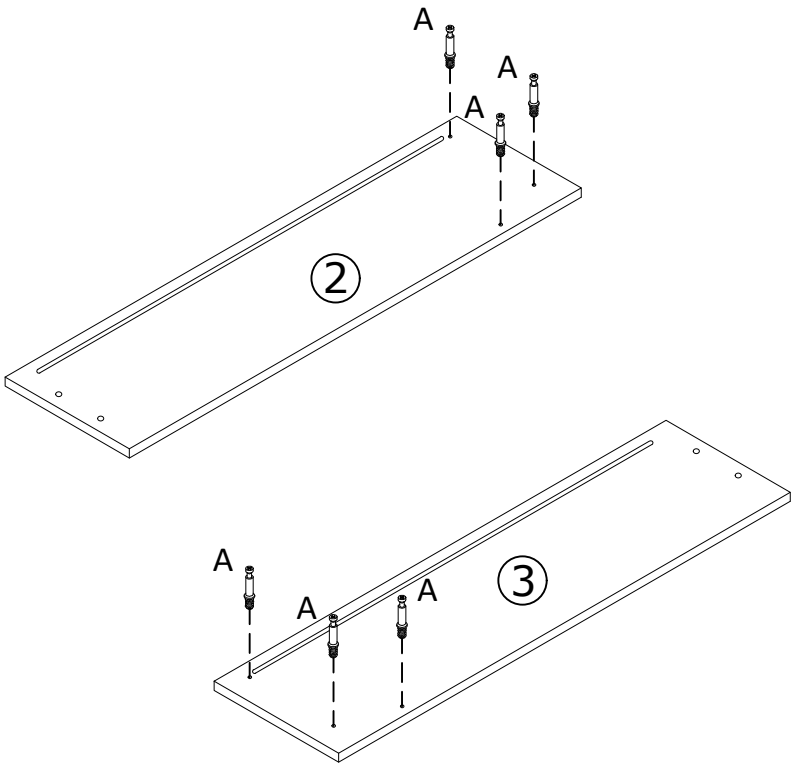	② Left Top panel ×1 ③ Right Top panel ×1 A Cam bolt（6x35mm）×6

STEP 6	Parts Required
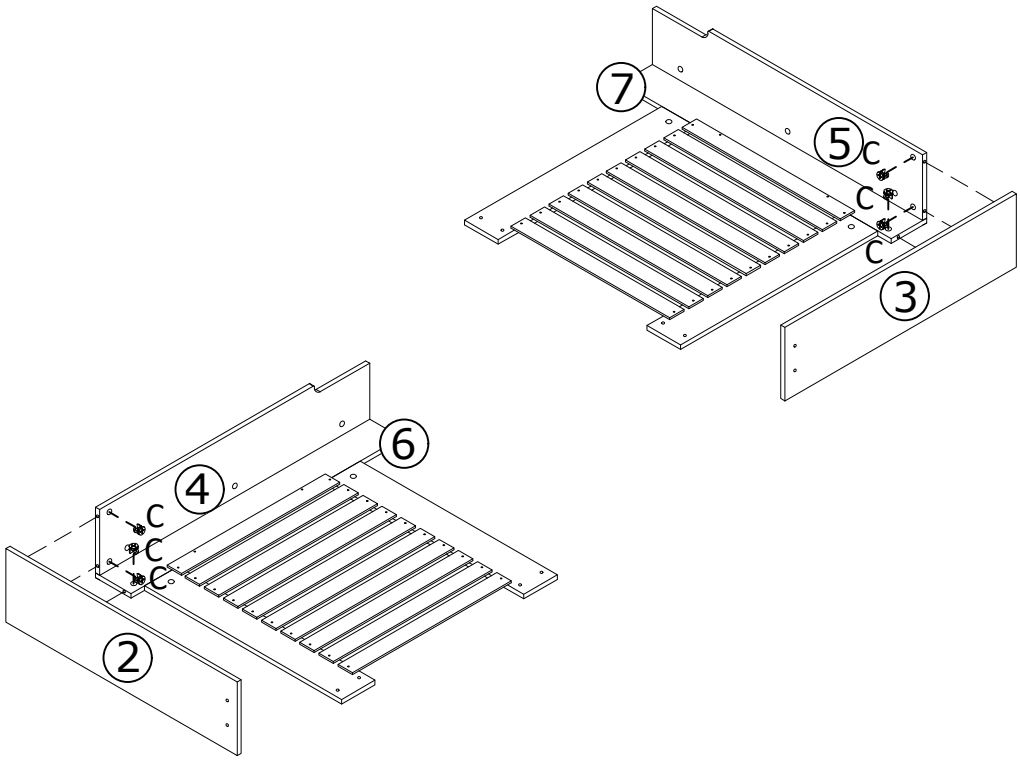	C Cam（15x10mm）×6

HARRISON ADJUSTABLE RADIATOR COVER ASSEMBLY INSTRUCTIONS

STEP 7	Parts Required
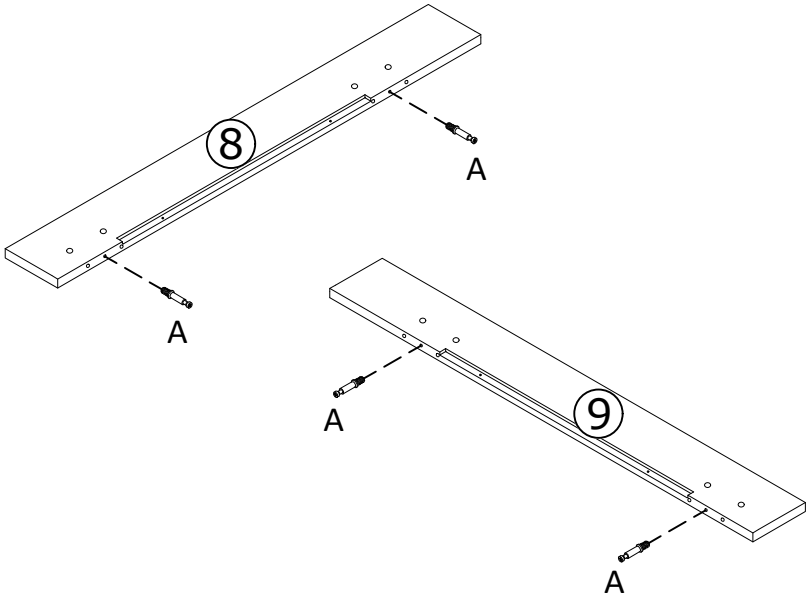	⑧ Middle Front panel (Left) ×1 ⑨ Middle Front panel (Right) ×1 A Cam bolt（6x35mm）×4

STEP 8	Parts Required
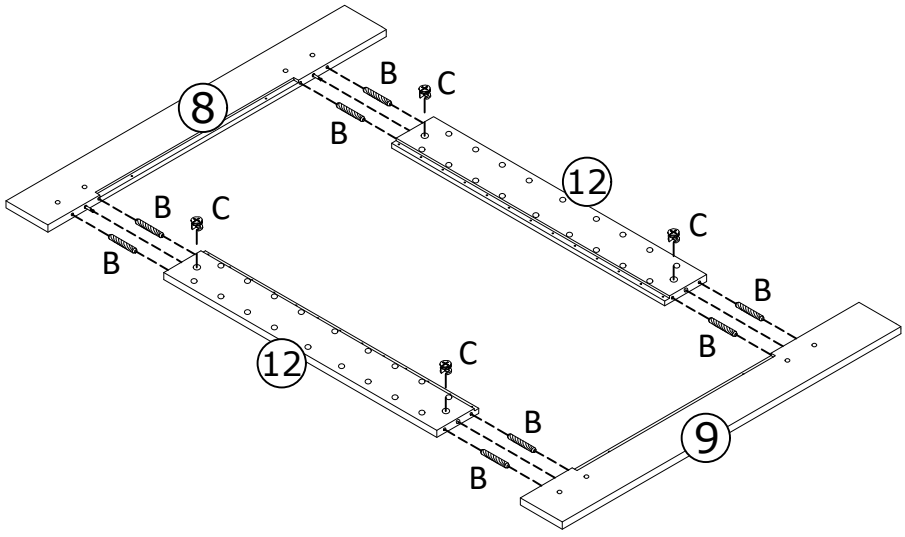	⑫ Middle Horizontal panel ×2 B Wood dowel（6x30mm）×8 C Cam（15x10mm）×4

HARRISON ADJUSTABLE RADIATOR COVER ASSEMBLY INSTRUCTIONS

STEP 9	Parts Required
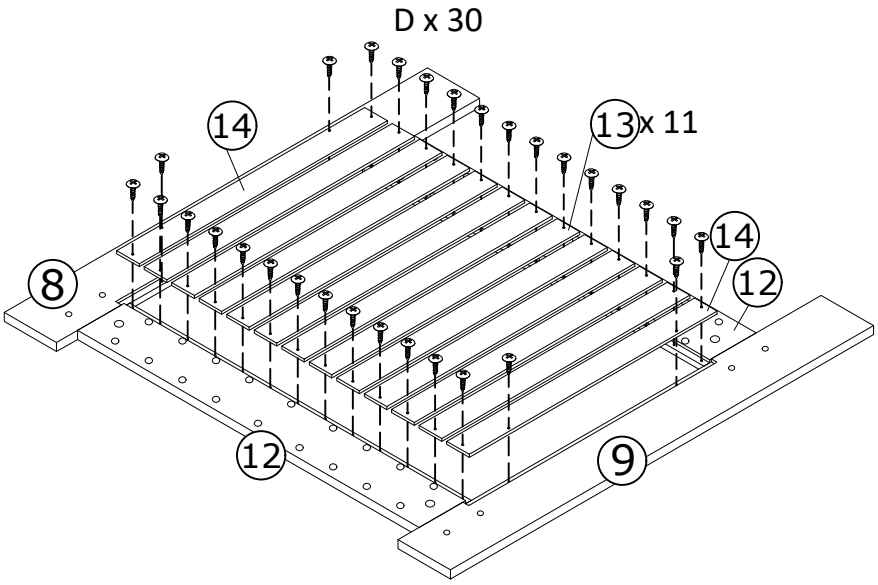	⑬ Slats ×11 ⑭ Slats ×2 D Screw（5x12mm）×30

HARRISON ADJUSTABLE RADIATOR COVER ASSEMBLY INSTRUCTIONS

STEP 10	Parts Required

Assembly note: This step is easier with two persons.

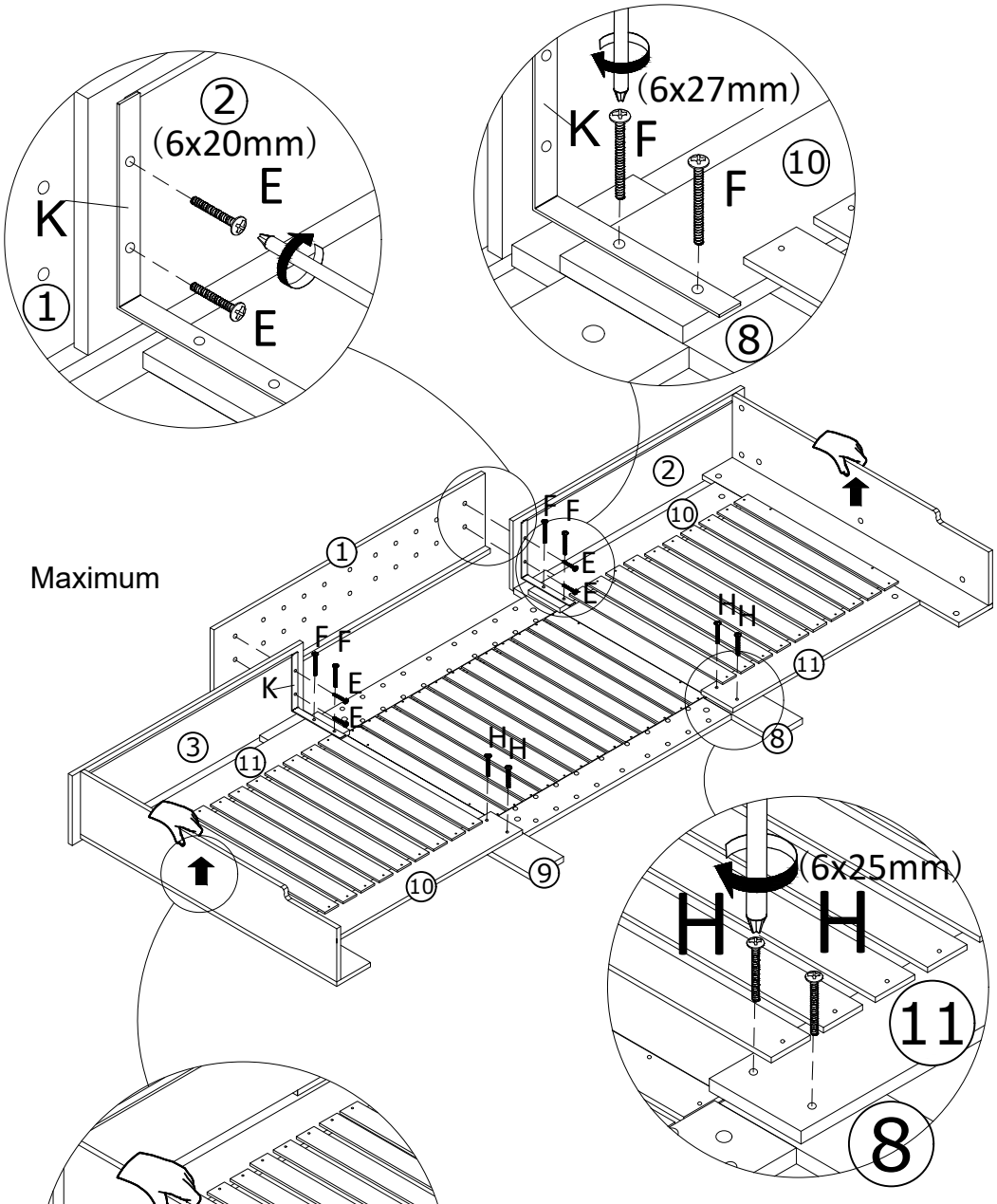

To ensure proper alignment with the holes, lift the both side panel slightly while tightening screws E .F and H.

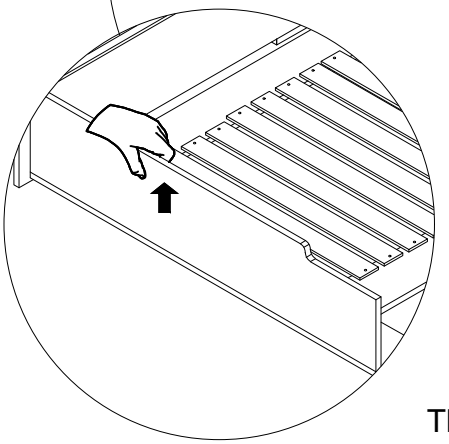



The L -shaped bracket (part K) is to be used to adjust the product size accordingly to your needs. This manual only displays the installation methods for changing the maximum and minimum dimensions of the product.

E Screw（6x20mm）×4
F Screw（6x27mm）×4
H Screw（6x25mm）×4
K L-shaped bracket ×2

HARRISON ADJUSTABLE RADIATOR COVER ASSEMBLY INSTRUCTIONS

Parts Required

Assembly note: This step is easier with two persons.

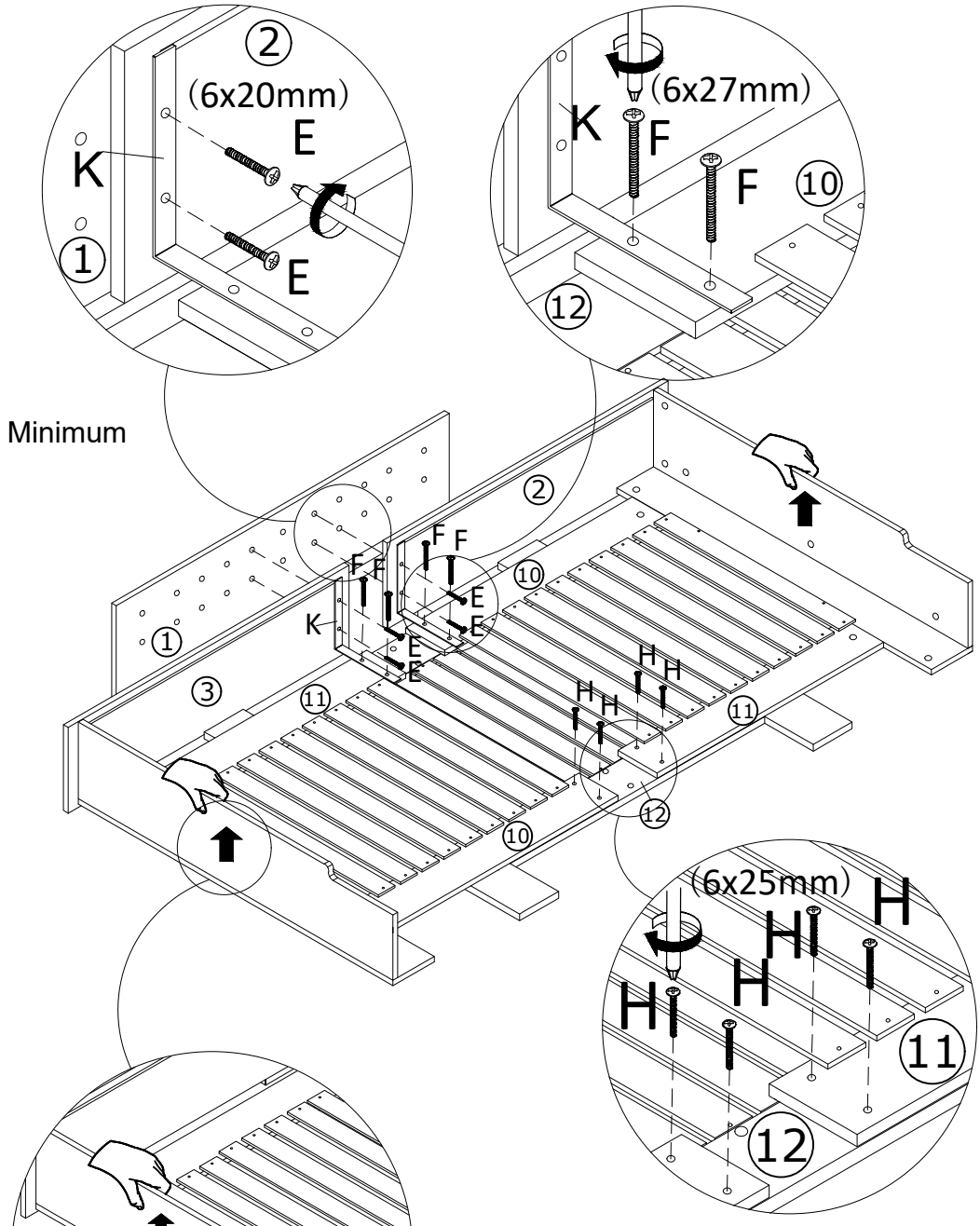

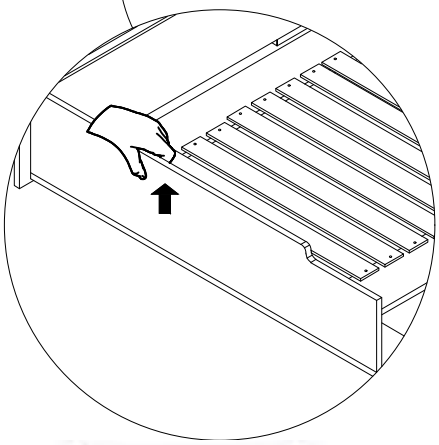

To ensure proper alignment with the holes, lift the both side panel slightly while tightening screws E . F and H.



The L -shaped bracket (part K) is to be used to adjust the product size accordingly to your needs. This manual only displays the installation methods for changing the maximum and minimum dimensions of the product.

E Screw（6x20mm）×4
F Screw（6x27mm）×4
H Screw（6x25mm）×4
K L-shaped bracket ×2

HARRISON ADJUSTABLE RADIATOR COVER ASSEMBLY INSTRUCTIONS

STEP 11	Parts Required

Position the radiator cover against the wall that it will be fastened to and using a pencil, mark the position of the screw holes onto the wall.
Drill where the holes have been marked and insert the wall plugs,ensuring the edge is flush with the surface of the wall.

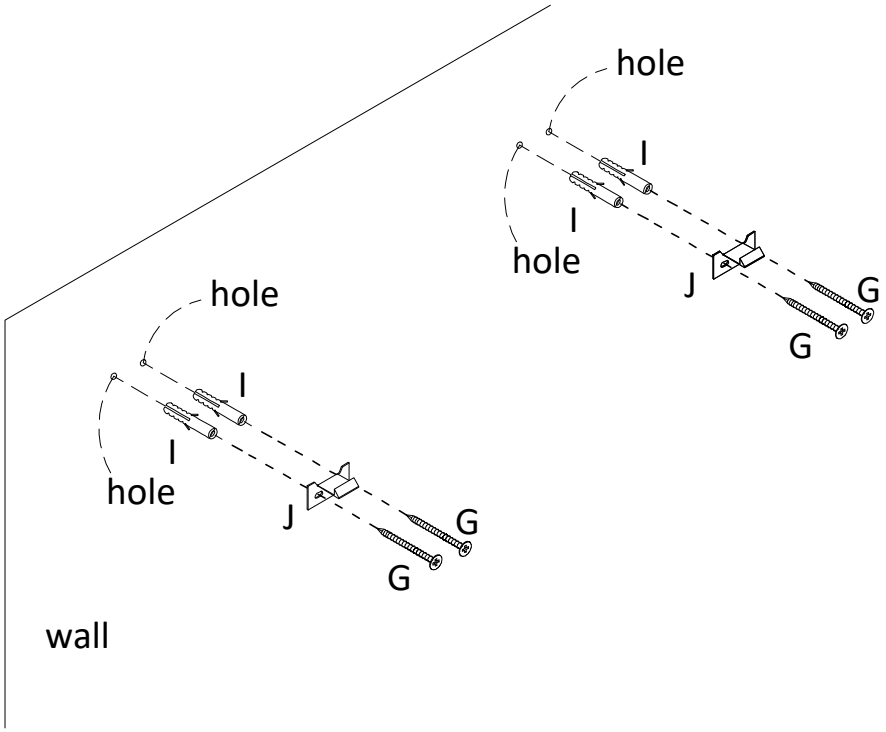

G Screw (4x40 mm) x 4
I Wall plug ×4
J Wall Bracket ×2

Wall fixing dimensions

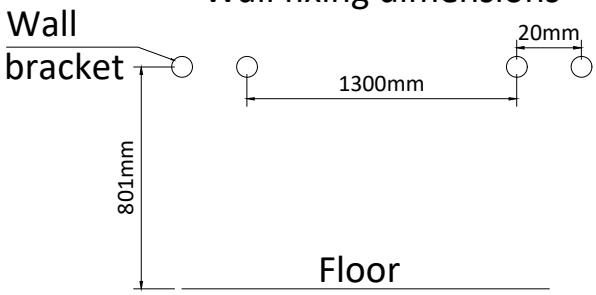

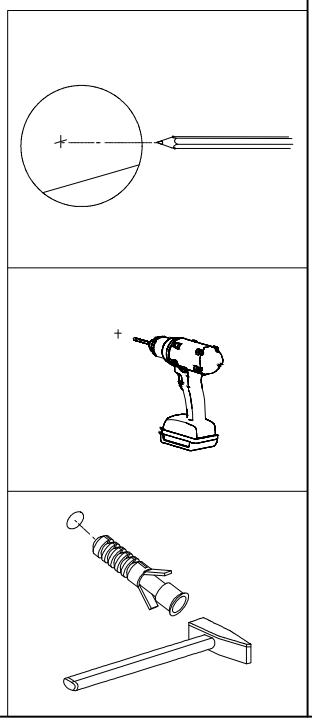

HARRISON ADJUSTABLE RADIATOR COVER ASSEMBLY INSTRUCTIONS

STEP 12	Parts Required

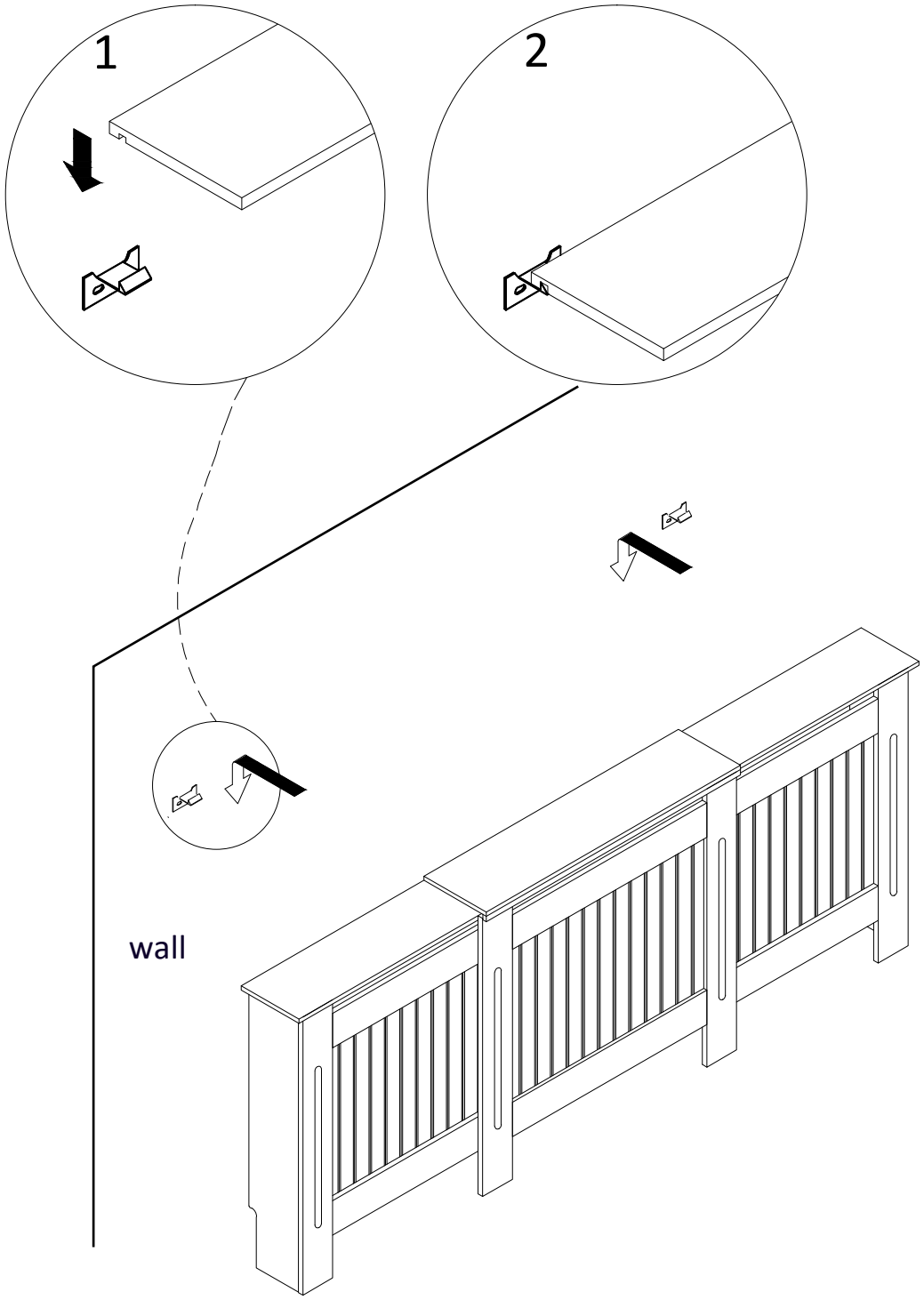

HARRISON ADJUSTABLE RADIATOR COVER ASSEMBLY INSTRUCTIONS

Complete Assembly

Your HARRISON ADJUSTABLE RADIATOR COVER is now completely assembled.
Periodically check to ensure that the components are in their proper position and free from damage.
Also make sure the connectors are tight and secure

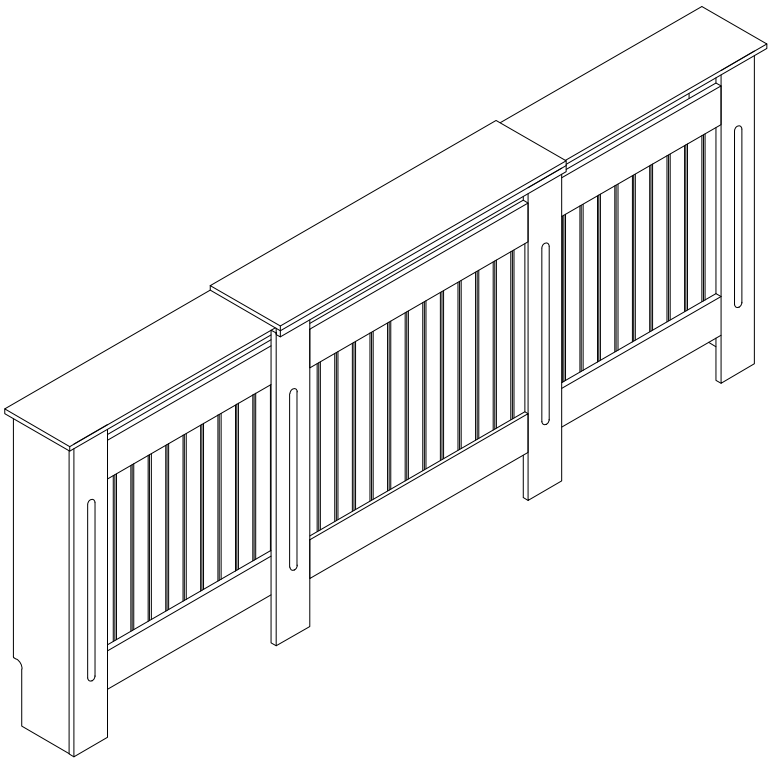

Keep instructions for future reference.

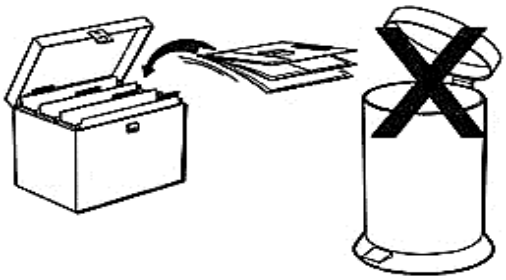

Supplied by : GFW THE FURNITURE WAREHOUSE
Waterside Distribution Centre
Waterside Business Park
Johnson Road
Lancashire
BB3 3RT
www.gfwlimited.co.uk

Represented by:
Authorised Rep Compliance Ltd 71
Lower Baggot Street
Dublin
D02 P593
Ireland
www.arccompliance.com