KINGSTON

TO ORDER PARTS, CALL: 1-877-252-7277
www.kingstonbrass.com

CCK2130,1,2,3,5,6,7
Shower Combo

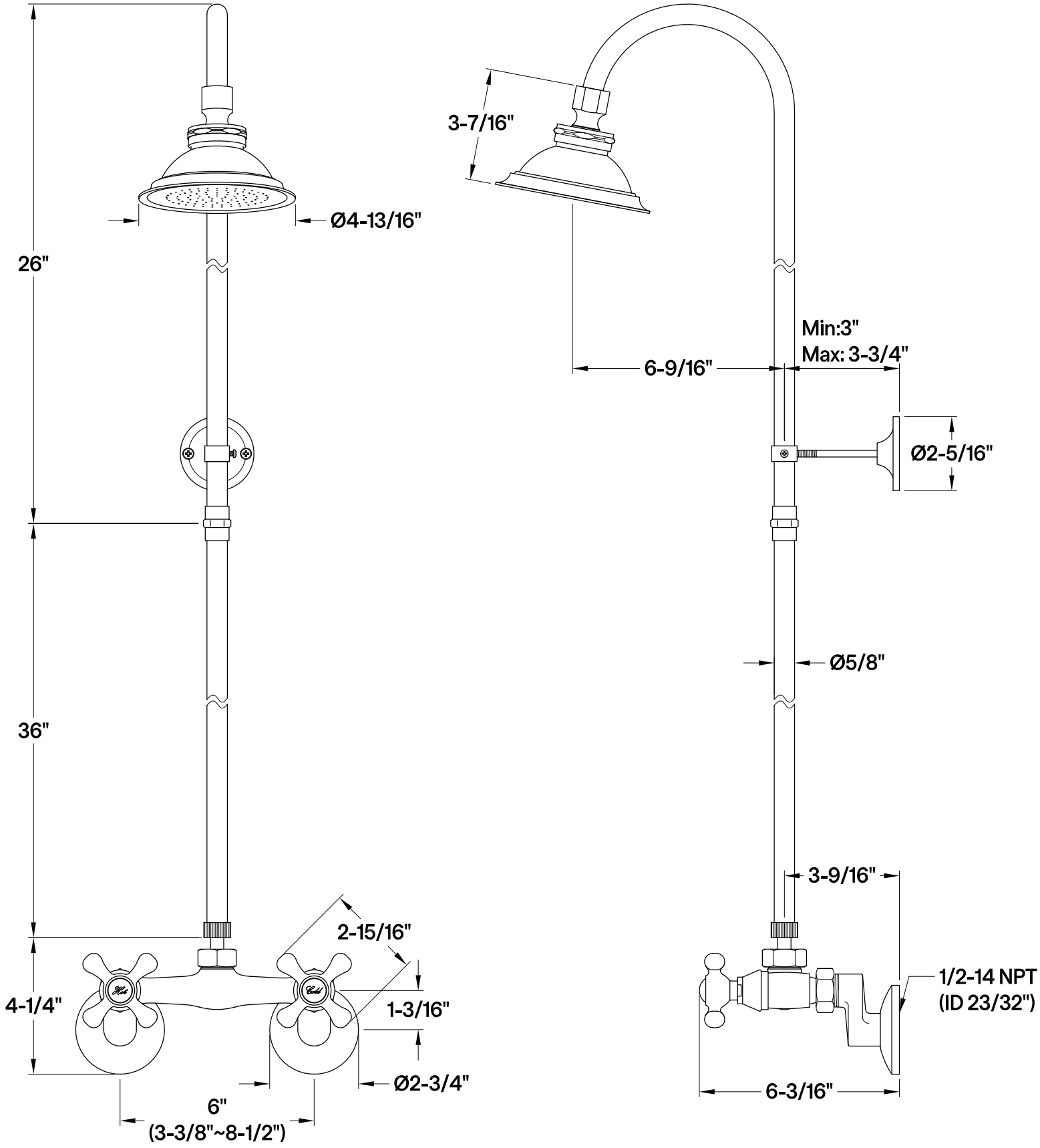

2025-12-A