7

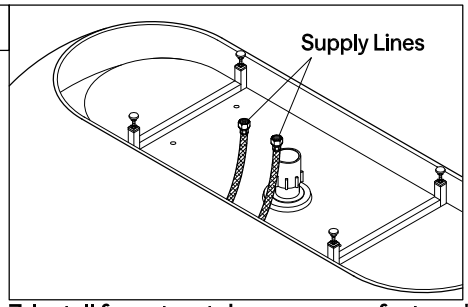

7. Install faucet on tub as per manufacturer's instructions and attach flexible supply lines to the faucet, these lines should be long enough to extend 4" to 8" beyond the bottom of the tub.

8

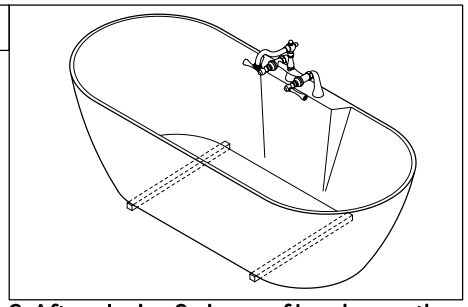

8. After placing 2 pieces of Lumber on the area where the tub will be installed, place the tub on top, add Teflon tape to the shut-off valves and attach the faucet supply lines.

9

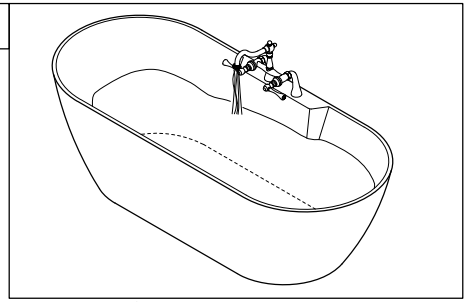

9. Close drain and open both hot and cold shut-off valves, open faucet valves and allow at least 1" to 2" of water into the tub, check for leaks on the faucet supply lines and drain.

10

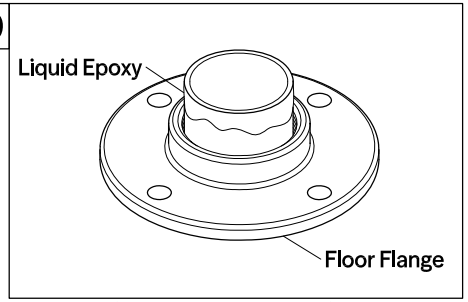

10. Apply liquid epoxy or a professional grade ABS glue or JB weld epoxy to the drain pipe coming from the floor, apply as per manufacturer's instructions.

11

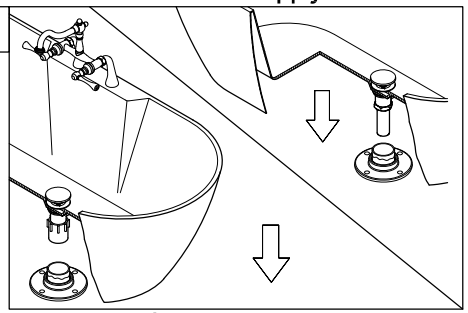

11. After Glue/ epoxy has been applied with the help of two or more people slowly pick up the tub and align the tub drain adapter to the drainage pipe, set tub in place.
If you installed the tailpiece to your drain, with the help of two or more people slowly pick up the tub and align the tailpiece to the drainage pipe, set tub in place, from below secure tailpiece to your drain pipe.

12

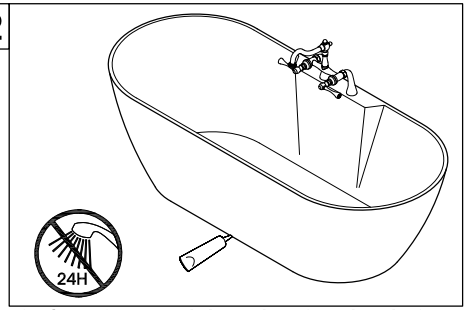

12. If you installed the tub using the drain tailpiece, with the drain still closed add more water into the tub, while inspecting the connections from below the floor, drain the tub and check for leaks, if you installed the tub using the drain adapter, allow the glue to dry for 24 hours before draining the tub, apply caulking around the perimeter as needed, clean off any excess caulking.

Cleaning

Clean with a damp cloth only.
Avoid using metal or abrasive polishes.

©2025 LVC Kingston LLC. All Rights Reserved.
2026-05-T

KINGSTON

AQUA EDEN

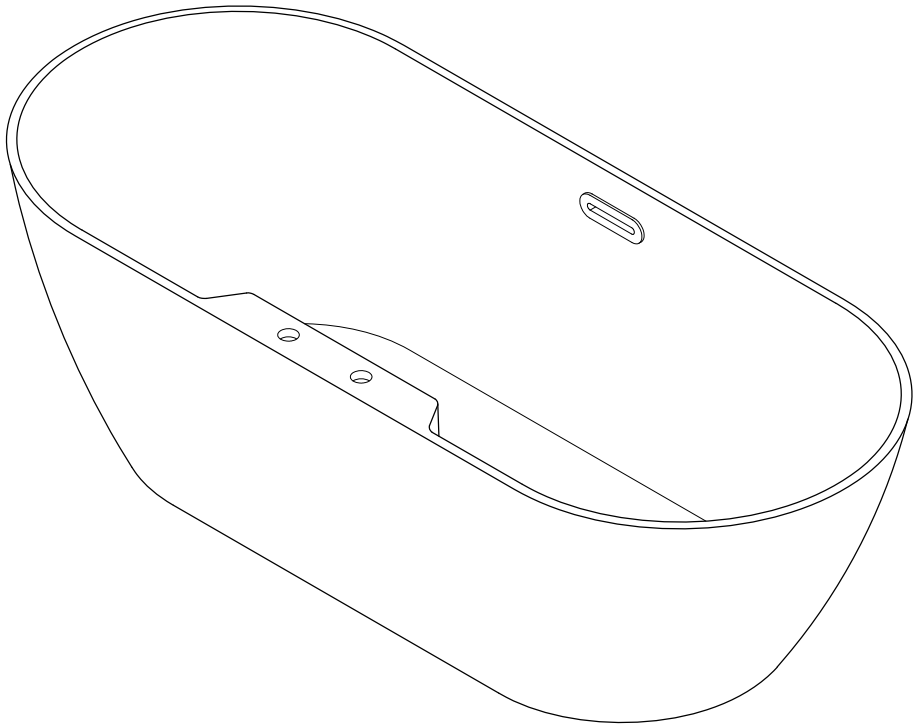

www.kingstonbrass.com

TOLL-FREE CUSTOMER SERVICE: 1-877-2-KBRASS
TECHNICAL SUPPORT E-mail: service@kingstonbrass.com
12775 Reservoir Street, Chino, CA 91710

NOTICE

Failure to follow all directions may cause leaks which may result in water damage



⚠WARNING

Lifting hazard.

Single person lift could cause injury.
Use assistance when moving or lifting.

KINGSTON

AQUA EDEN

Acrylic Tub with or without Drain
Installation Instructions

Caution :

This bathtub is heavy. Get help lifting and moving this tub. Read all instructions thoroughly before starting the installation.

Important Points to Remember :

1. Provide adequate floor support.
2. Make sure the subfloor is level. Provide drain access from below. Provide access to all plumbing connections. Observe local building and plumbing codes.

Important :

Before you begin Installation please read the following instructions, observe all local plumbing and building codes.

- Check area where tub will be installed to ensure that it is leveled and structurally sound.
- Please unwrap the tub and check it carefully for any damage that may have occurred during transportation.
- Check that all parts are included.
- If you have any missing parts, damage is found or have any questions regarding the installation process contact customer service at (877)-252-7277.
- Store bathtub in a safe place until you begin installation to avoid damage to the tub's surface.
- No claims for damages or blemishes will be accepted once the tub has been installed.
- We recommend that the installation of this tub be done by a qualified licensed professional.
- Because of its weight and volume we recommend that the installation of this tub be done with the help of at least one other person, a fall even what may seem like a minor one may result in cracking of the tub, moving straps and rubber gripped gloves are recommended.
- These Installation instructions do not include details of waste connections, the final details should be determined by your contractor

Installation Instructions :

1

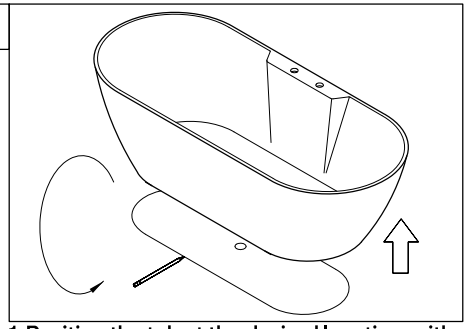

1. Position the tub at the desired location, with a pencil mark the perimeter of the tub, also mark the location of where the tub drain and faucet water supply lines will be situated, remove tub and place upside down on top of 2 pieces of lumber covered with a blanket or a piece of cardboard, the tub should be raised enough to allow for installation of the faucet.

2

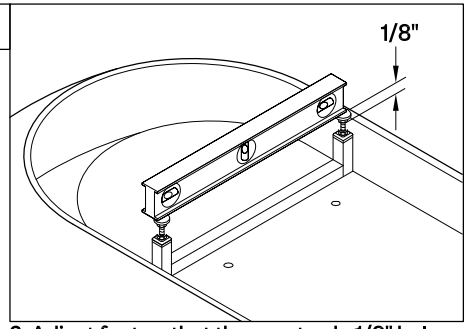

2. Adjust feet so that they protrude 1/8" below the level of the tub, you can accomplish this by placing a level or a straight piece of lumber across the width of the tub.

Tools Required

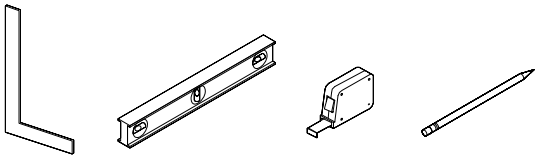

Conventional Woodworking Tools & Materials

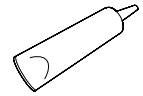

Silicone Sealant



Teflon Tape



Glue/ Epoxy

3

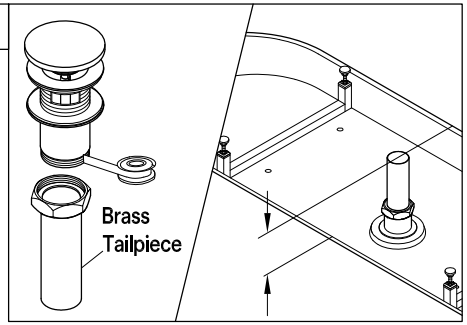

3. If you have access to the tub drain from below the floor, apply Teflon tape to the drain and thread the included tailpiece. Measure how far it protrudes from the bottom of the tub, then rough in your drain pipe accordingly.

4

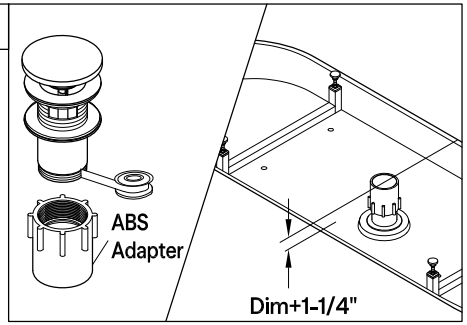

4. If you do not have access to the tub from below the floor, your tub includes an ABS adapter for a 1-1/2" drain, apply Teflon tape to the threading on the drain and install the tub drain adapter, tighten by hand until secure, measure the distance between the bottom of the drain adapter and the floor, add 1-1/4" that should give you the height of the drain pipe, you can measure the distance to the floor by placing a piece of lumber across the bottom of the tub and using that as your guide to determine the floor level.

5

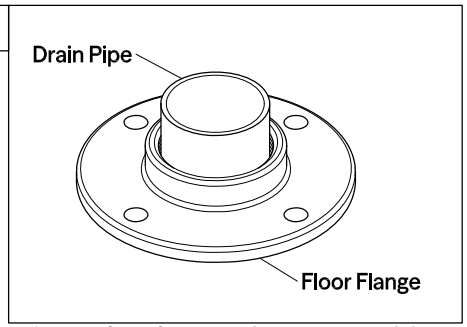

5. Secure floor flange to the area around the drain, this will serve as additional reinforcement to keep your tub drain in place in the event of any accidental impact on the tub.

6

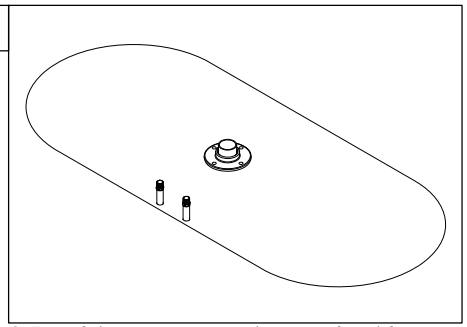

6. Rough in water supply lines on the side where the faucet will be situated, it is recommended that you install the shut-off valves for the faucets supply lines in a location easily accessible, and without having to remove the tub in case of leaks or faucet repairs.