KINGSTON

TO ORDER PARTS, CALL: 1-877-252-7277
www.kingstonbrass.com

KS1231,5,8BEXBS

Twin Handles Deck Mount Kitchen Faucet with Brass Sprayer

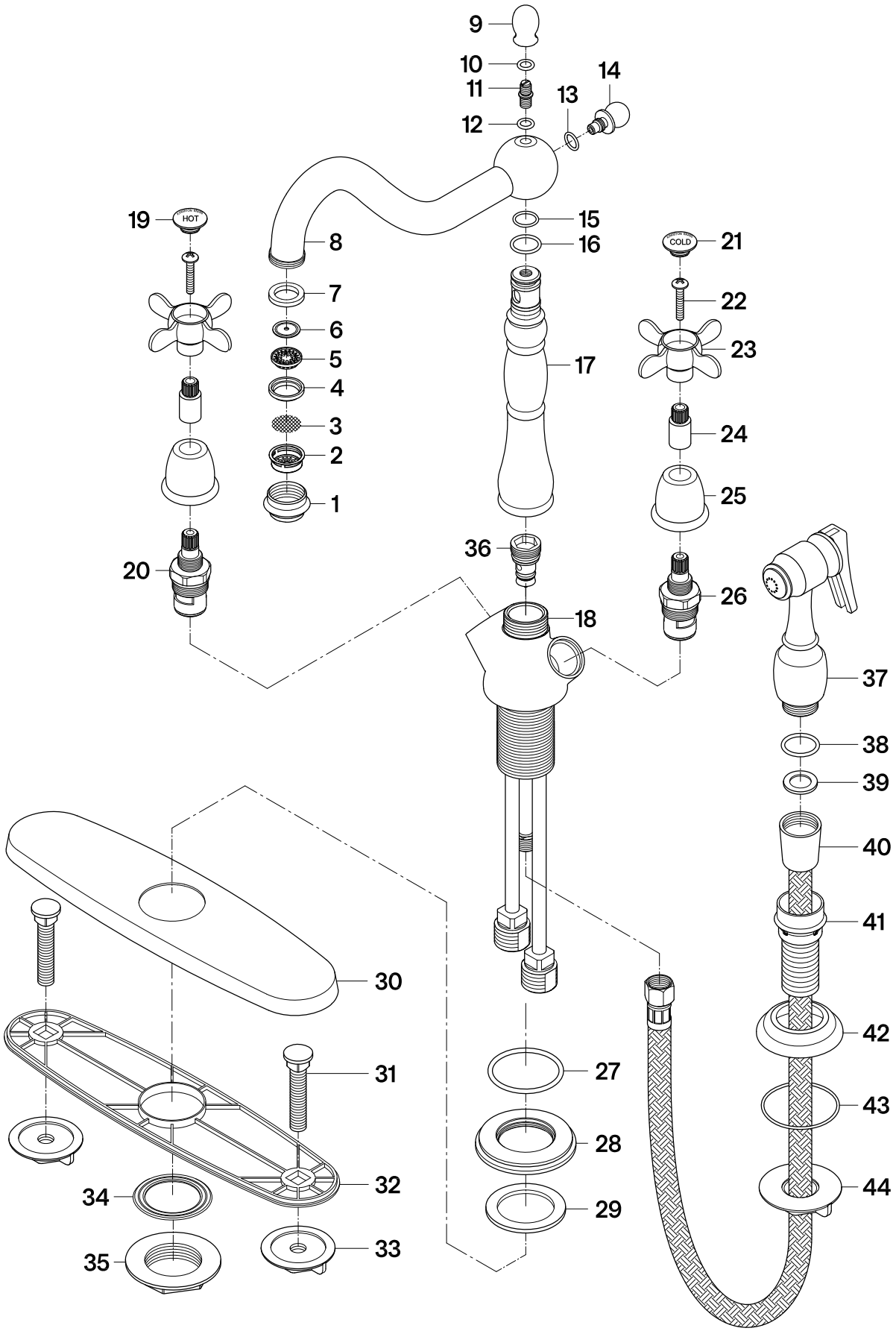

2025-12-A