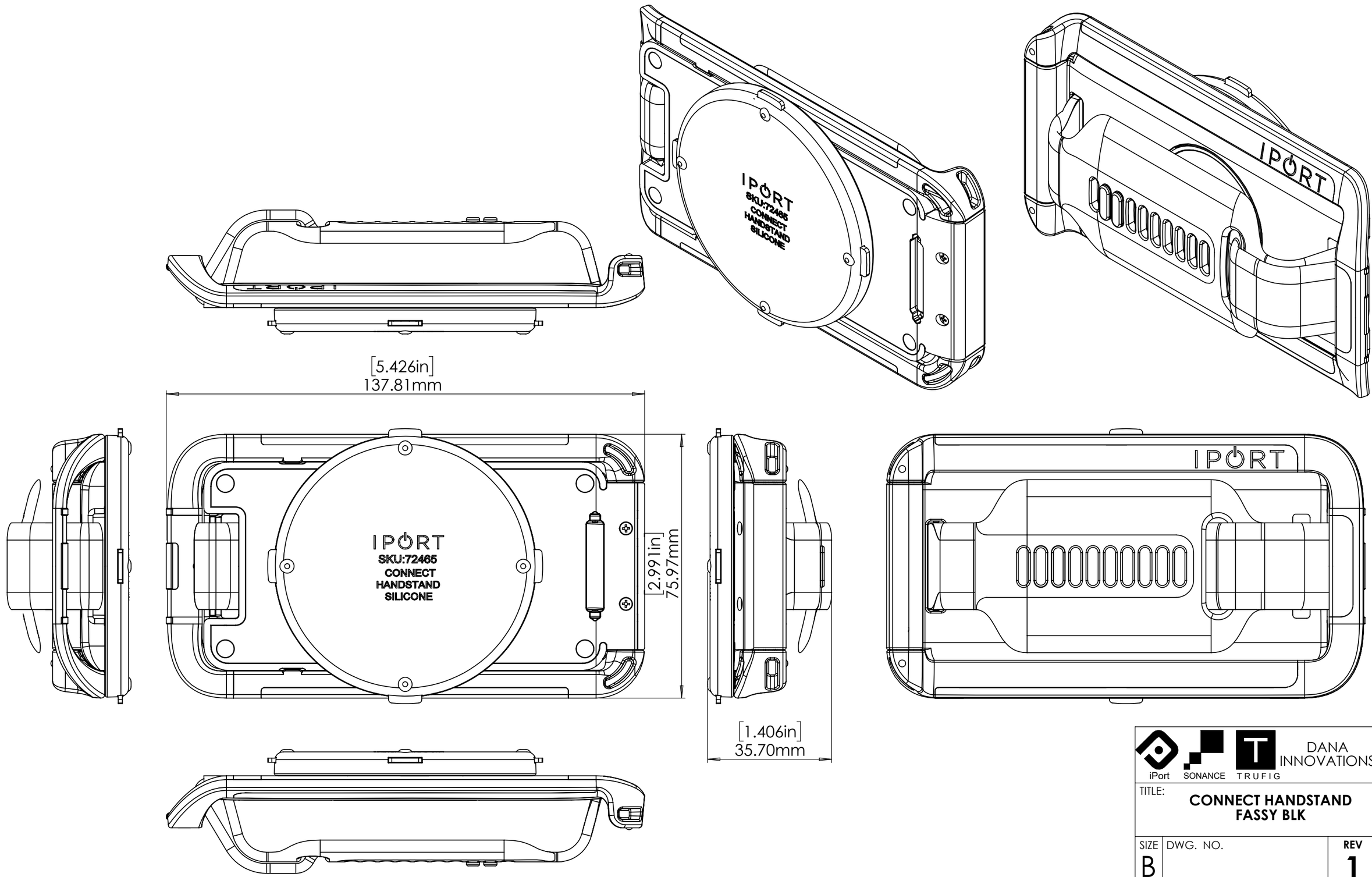

iPort SONANCE TRUFIG DANA INNOVATIONS

TITLE: **CONNECT HANDSTAND FASSY BLK**		
SIZE B	DWG. NO.	REV 1
SCALE: 1:1	WT:	SHEET 1 OF 1