KS36310,20,50,80V

Thermostatic Valve Only with Volume Control

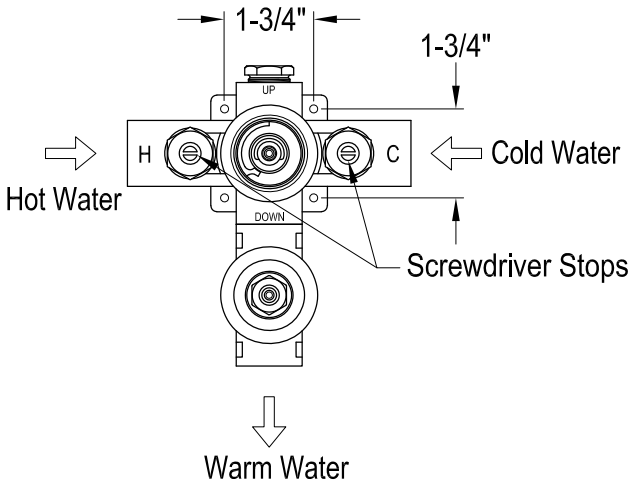

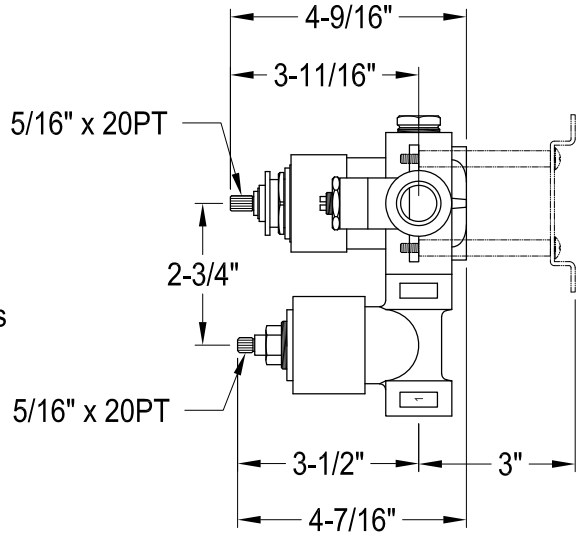

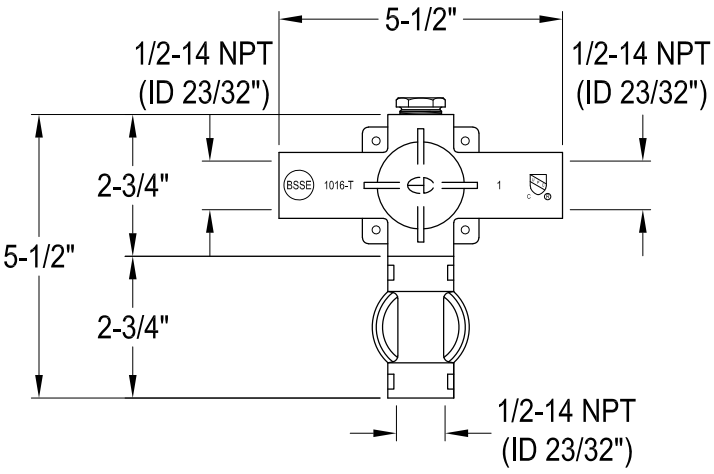

Vertical Mount

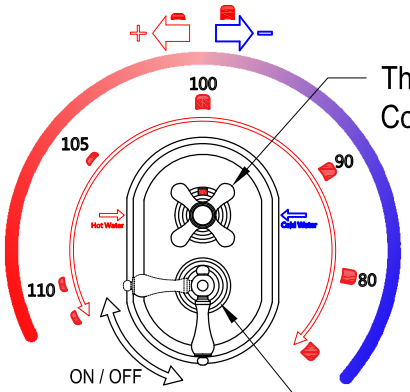

Thermostatic Temperature Control

Volume Control

Horizontal Mount

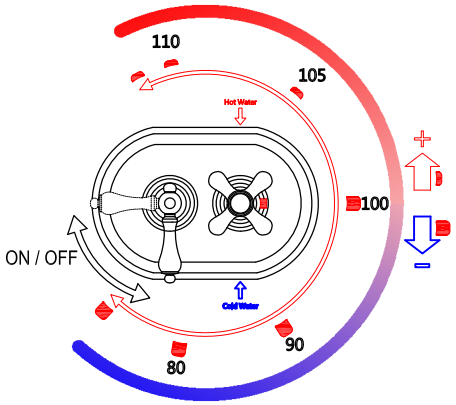

Bracket

