Archer® | K-1949-H

66" x 32" drop-in heated whirlpool bath

Features

- Single-speed whirlpool offers performance and value with 8 fully adjustable jets
- Hydromassage flow and direction can be controlled at each jet
- Built-in heater
- Comfort Depth® design offers a convenient 19" step-over height while retaining the same depth as a standard 21" bath
- Integral lumbar support
- Slotted overflow allows for deep soaking
- Textured bottom surface
- Coordinates with other products in the Archer collection

Available Colors/Finishes

Color tiles intended for reference only.

0	White
96	Biscuit
95	Ice Grey
7	Black Black

1-800-4KOHLER (1-800-456-4537)
Kohler Co. reserves the right to make revisions without notice to product specifications.
For the most current specification sheet, go to www.kohler.com USA or www.kohler.ca Canada.
5-12-2026 19:9 - US-CA

Codes/Standards

ADA compliant when installed to the specific requirements of these regulations.

ADA

ASME A112.19.7/CSA B45.10
CSA B45.5/IAPMO Z124
UL 1795
CSA C22.2 No. 218.2
ADA
ICC/ANSI A117.1
cUL Listed
UL Listed

Technical Information

All product dimensions are nominal.

Drain Location:	Reversible
Drain Hole Diameter:	2-1/8" (55 mm)
Minimum Flat for Door:	2-1/8" (54 mm)
Basin Area, Bottom:	50-3/8" x 19-5/8" (1280 mm x 498 mm)
Basin Area, Top:	57-5/16" x 24-1/16" (1456 mm x 611 mm)
Water Depth:	15-5/16" (389 mm)
Water Capacity:	66 gal (249.8 L)
Minimum Floor Load:	47 lbs/ft²
Weight:	106 lbs (48.1 kg)
Cutout:	Drop-in, 64-1/2" x 30-1/2" (1638 mm x 775 mm) with 0" (0 mm) radius corners

Material

- Acrylic

Recommended Products/Accessories

K-23726 Drain treatment

K-23732 Tub & shower cleaner

Required Products/Accessories

- K-7271 Slotted overflow brass bath drain

or

- K-7272 Slotted overflow bath drain

Required Electrical Service

Two dedicated circuits required, protected with Class A Ground-Fault Circuit-Interrupter (GFCI). Outside North America, this device may be known as a Residual Current Device (RCD).

Pump:	120 V, 15 A, 60 Hz
Heater:	120 V, 15 A, 60 Hz

Electrical Component Ratings

Pump:	120 V, 7.0 A, 60 Hz
Heater:	120 V, 12.5 A, 60 Hz, 1500 W

Warranty

See website for detailed warranty information.

KOHLER® Plastic Baths and Shower Bases Lifetime Limited Warranty|KOHLER® Hydrotherapy Components Five-Year Limited Warranty

1-800-4KOHLER (1-800-456-4537)
Kohler Co. reserves the right to make revisions without notice to product specifications.
For the most current specification sheet, go to www.kohler.com USA or www.kohler.ca Canada.
5-12-2026 19:9 - US-CA

THE BOLD LOOK OF KOHLER

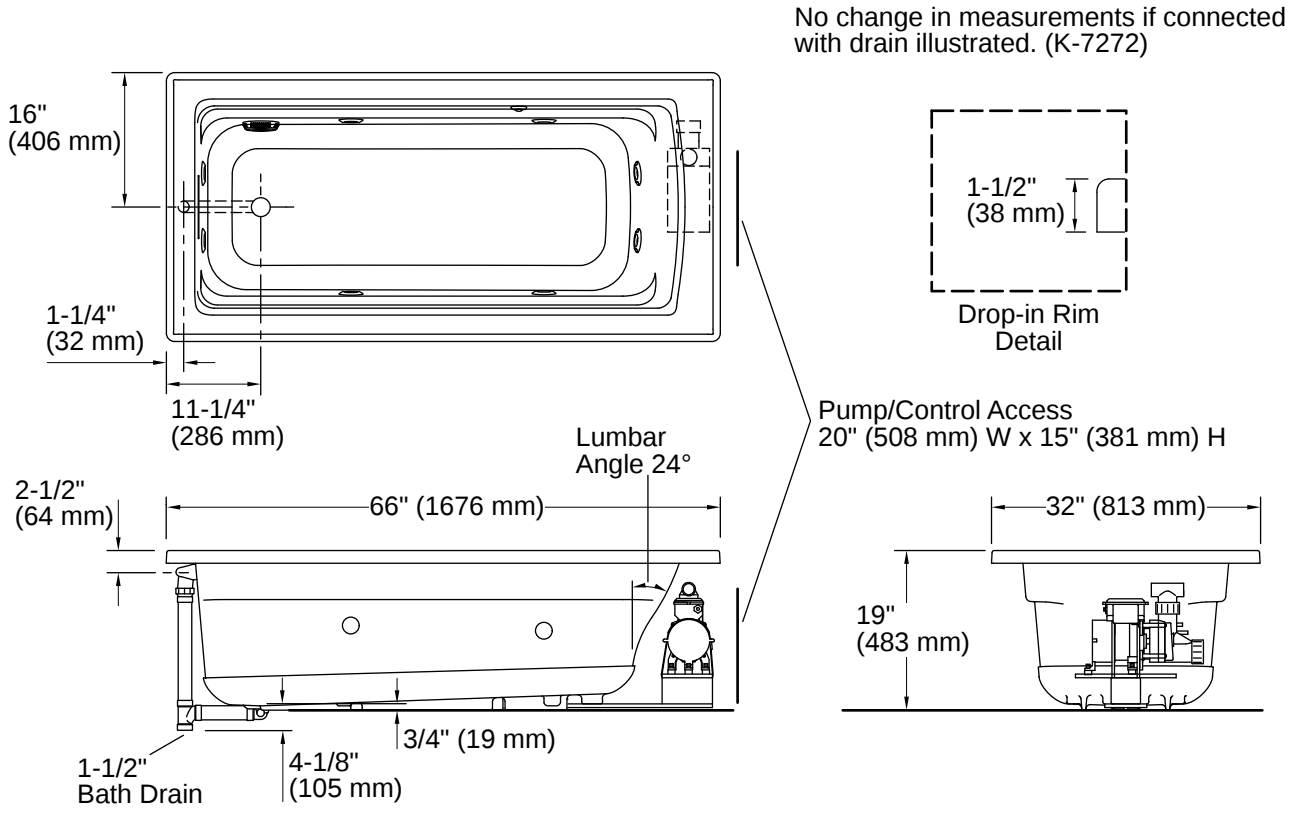

Installation

- Reversible drain
- Drop-in
- Requires Clearflo slotted overflow bath drain (sold separately)

Installation Notes

Install this product according to the installation instructions.

Measure your actual product for rough-in details.
The hot water supply should be 70% of the capacity of the bath or greater. Installations will vary.
This product is designed for drop-in installation only. It is not suited for use in a three-wall alcove with an overhead shower.
ADA compliant when installed to the specific requirements of these regulations.

1-800-4KOHLER (1-800-456-4537)
Kohler Co. reserves the right to make revisions without notice to product specifications.
For the most current specification sheet, go to www.kohler.com USA or www.kohler.ca Canada.
5-12-2026 19:9 - US-CA

THE BOLD LOOK OF KOHLER