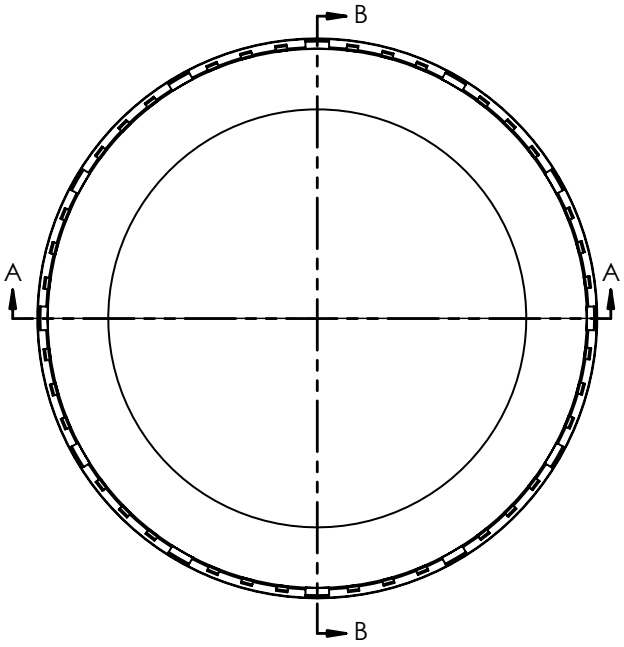

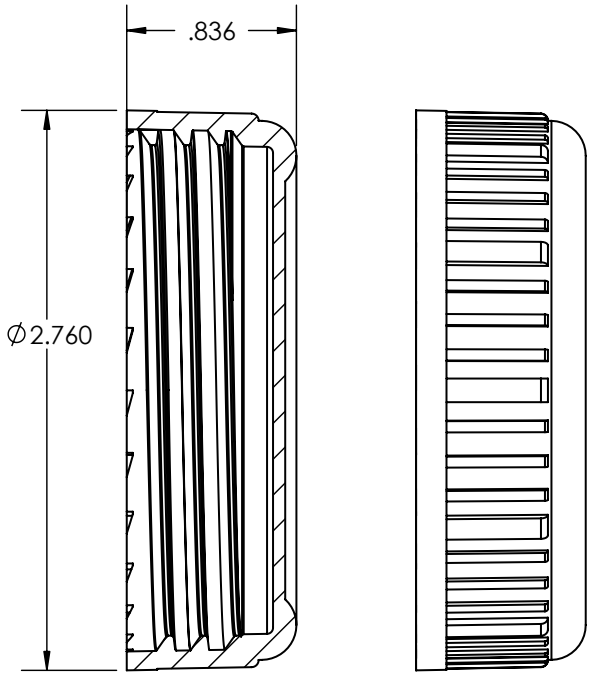

SECTION B-B

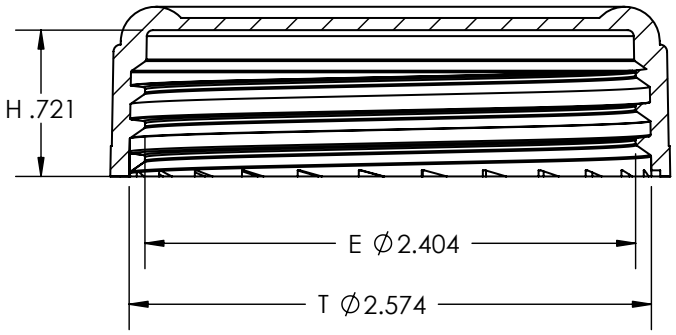

SECTION A-A

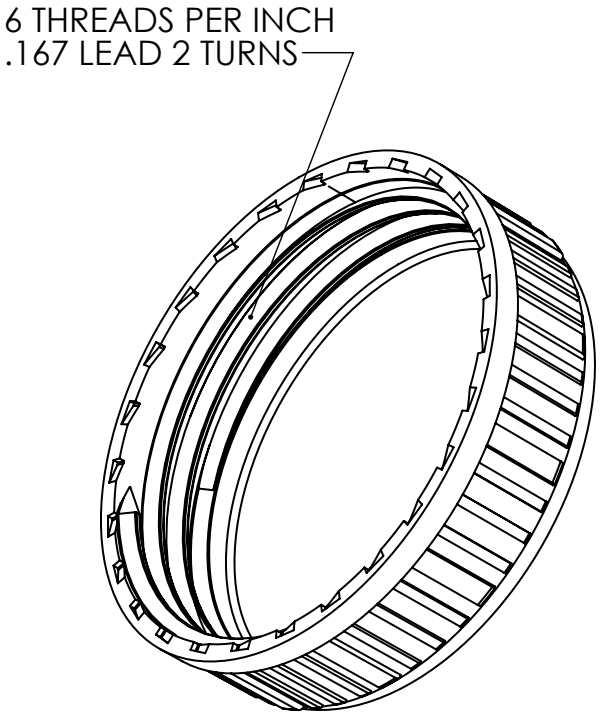

DIMENSIONS ARE IN INCHES
TOLERANCES:
FRACTIONAL ±
ANGULAR: MACH ± BEND ±
TWO PLACE DECIMAL ±.015
THREE PLACE DECIMAL ±.008

MATERIAL polypropylene copoly

DISTRIBUTED BY: Pipeline Packaging

REF NO.: DWG-Q1794

DESCRIPTION:
63-485 WHITE PP RIBBED SIDES CT CAP F-828 & ISPE U-10 OLEO/PE 0.20µ VENT FOIL LINER @525/CASE

DISCLAIMER

This specification does not relieve the customer of their ultimate responsibility for the determination of the appropriate container. It is the customer's responsibility to select the appropriate packaging based upon all information at their disposal including the specific application, regulatory compliance, product compatibility and shipping requirements. WE HEREBY DISCLAIM AND EXCLUDE ANY EXPRESS OR IMPLIED WARRANTIES, INCLUDING WITHOUT LIMITATION THE IMPLIED WARRANTIES OF MERCHANTABILITY AND FITNESS FOR A PARTICULAR PURPOSE.

Membrane Specifications

Membrane Material	Oleophobic ePTFE, 0.2-Micron membrane		
Membrane Style	M-Vent	Membrane Thickness	6-10 mil
Oleophobicity Rating (0-8; 8 is most repellent)	6	Airflow @ 0.07 ATM	0.59 – 1.18 ml/min
Water Entry Pressure (WEP)	>90 psi	Vent Patch Diameter	0.437 inch ± 0.020 inch
Vent Opening Area	0.0224 in^2		

Regulatory Information

Cap liners and/or seals with ePTFE vents are not intended for use in contact with food. They should only be used in non-food applications.

- F-828 is a three-layer coextruded primary liner consisting of two solid polypropylene (PP) solid outer layers and a polyolefin closed-cell foam core
- The foamed core provides compression and resilience to provide gasket functionality and the solid surfaces provide a smooth surface for maximum leak resistance and barrier
- F-828 is recommended for certain hot fill food applications, and it performs well in conjunction with induction heat seal products
- Does not promote microbial growth

Construction[1]

Thickness SI (µm)		Thickness US (Mils)
Standard Thicknesses 762 – 3175 in 127 µm increments		Standard Thicknesses 30 -125 in 5 mil increments

Properties

Characteristic	SI	US
Color	White	White
Appearance	Opaque	Opaque
Density at liner thickness		
508 – 762 µm | 20 – 30 mil	610 ± 30 kg/m^3	38 ± 2 lb./ft^3
889 – 3175 µm | 35 – 125 mil	510 ± 30 kg/m^3	32 ± 2 lb./ft^3
Thickness Tolerance		
762–1524 µm | 30–60 mil	± 178 µm	± 5 mil
1650–2290 µm | 65–90 mil	± 178 µm	± 7 mil
2410–3180 µm | 95–125 mil	± 254 µm	± 10 mil
Durometer[2] Shore A, O"	79	79
Compression Set[2] 23°C, 25%, 22h	41	41
Available Widths		
762 – 1520 µm | 30 – 60 mil	25,4 – 1016,0 mm	1.0 – 40.0 in
1650 – 3180 µm | 65 – 125 mil	25 – 228 mm	1 – 9 in
Width Tolerance	± 1,6 mm	± 0.0625 in

Product Attributes

- Mechanically strong and stable
- Excellent chemical resistance
- Good compressibility
- Coextruded, not laminated, no adhesive
- Resists discoloration
- Good machinability
- Does not promote microbial growth
- No absorption
- Ideal application and removal torque
- Non-toxic and free of odors and taste

DISCLAIMER

This specification does not relieve the customer of their ultimate responsibility for the determination of the appropriate container. It is the customer's responsibility to select the appropriate packaging based upon all information at their disposal including the specific application, regulatory compliance, product compatibility and shipping requirements. WE HEREBY DISCLAIM AND EXCLUDE ANY EXPRESS OR IMPLIED WARRANTIES, INCLUDING WITHOUT LIMITATION THE IMPLIED WARRANTIES OF MERCHANTABILITY AND FITNESS FOR A PARTICULAR PURPOSE.

DISTRIBUTED BY: Pipeline Packaging

REF NO.: DWG-Q1794

DESCRIPTION: 63-485 WHITE PP RIBBED SIDES CT CAP F-828 & ISPE U-10 OLEO/PE 0.20µ VENT FOIL LINER @525/CASE