P-Trap Installation:

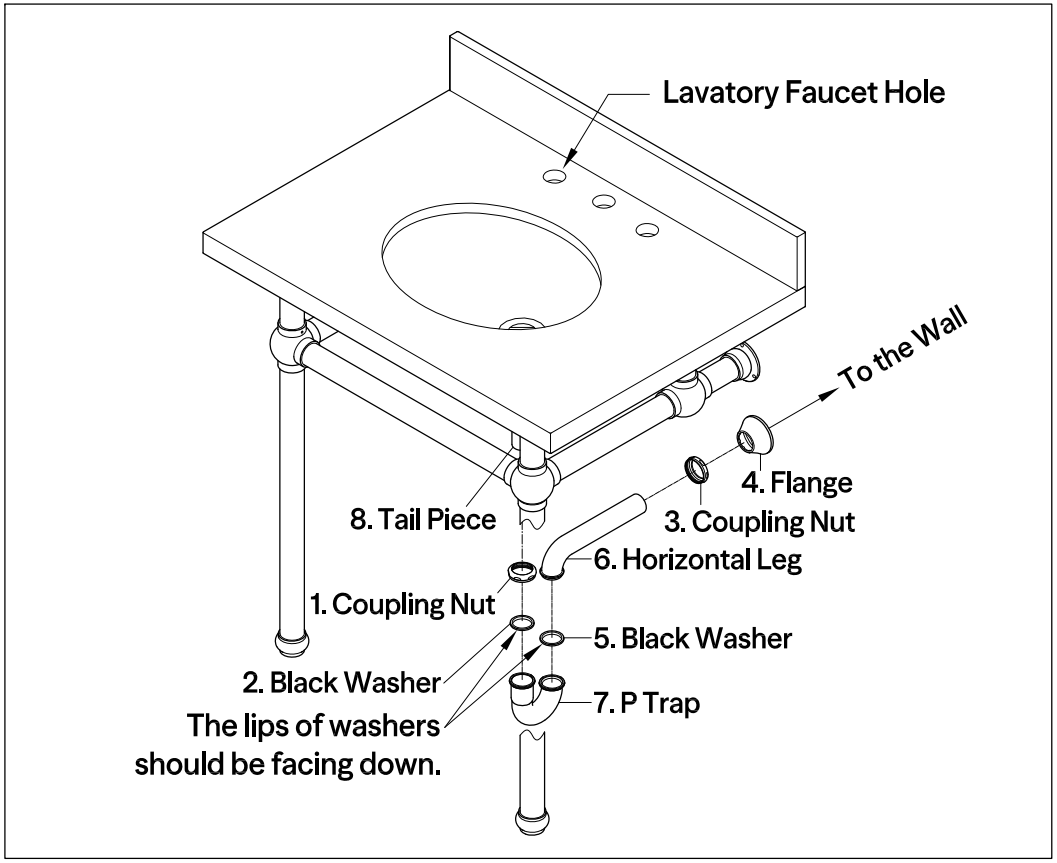

1. Insert horizontal leg (6) into wall drain stub-out.
2. Remove coupling nut (1) and black washer (2) from the P-trap (7) .
3. Insert coupling nut (1) and black washer (2) onto the tailpiece (8), make sure the lip of washer is facing down.
4. Attach P-trap to the tailpiece (8). Slowly and carefully move the black washer (2) down to touch the inlet of P-trap (7) by hand. Then tighten up the coupling nut (1).
5. Align P-trap (7) with horizontal leg (6) and tailpiece (8), at this point it may be necessary to cut part of tailpiece (8) or part of horizontal leg (6) to obtain proper alignment.
6. Check if all components are properly tightened.
7. Run water. If leaks appears and tightening doesn't correct it, loosen coupling nuts (1) or (3), check black washers (2) and (5) are properly installed. Retighten coupling nuts (1) or (3).

Cleaning Instructions: Wipe this whole set off with warm water and a soft cloth. Do not use soaps, cleansers, or brass cleaners as they will disintegrate the protective coating and leave the brass exposed therefore causing tarnishing.

KINGSTON

FAUCETURE

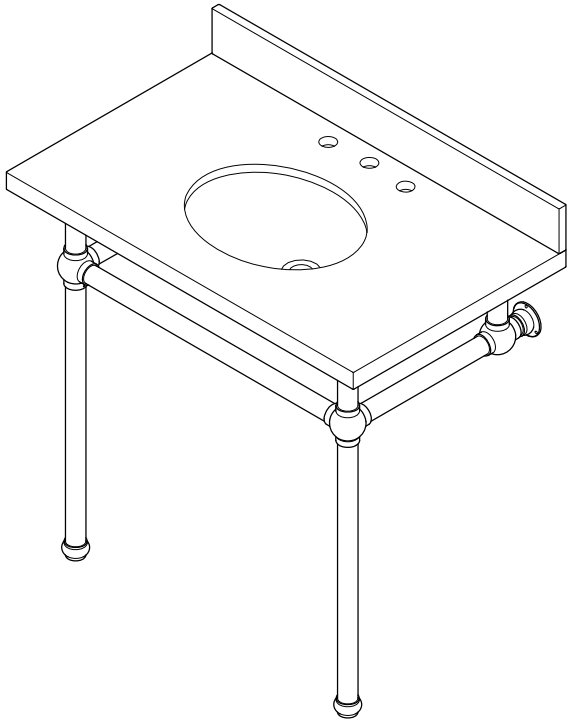

Parts:

Flange	Side bar	Support bar	Support bar	3-Way Ball Joint	4-Way Ball Joint
A	B	C	D	E	F
6 Pcs	2 Pcs	2 Pcs	2 Pcs	2 Pcs	2 Pcs
Front Bar	**Floor Flange**	**Floor Screw**	**Wooden Screw**	**Frame**	
G	H	I	J	K	
1 Pc	2 Pcs	2 Pcs	6 Pcs	1 Pc	

⚠CAUTION

Failure to follow all installation directions may cause product to detach from the wall and cause serious injury

www.kingstonbrass.com

TOLL-FREE CUSTOMER SERVICE: 1-877-2-KBRASS
TECHNICAL SUPPORT E-mail: service@kingstonbrass.com
12775 Reservoir Street, Chino, CA 91710

KINGSTON

FAUCETURE

Console Sink Legs
Installation Instructions

Before Installation :

1. Unpack your new KINGSTON product and inspect it keep the product in its original package until you are ready to install it.
2. Shut the water supply off when replacing an existing fixture. Preparation of the floors and walls, including all additional wall supports, maybe required.
3. Observe all local plumbing and building codes.
4. It is recommended that you enlist the assistance of a second person to install this unit.
5. Make sure to select appropriate drain as some of Kingston Brass vessel sinks do not include overflow hole.
6. The weight capacity of this unit is solely dependent on its installation.
   a) Once the location has been selected, make sure to install 2" x 6" lumber or larger wood bracing, in order to secure the console properly.
   b) For maximum weight capacity we recommend that you use our bracket # VSPLBRKT, bracket should be attached to 2" x 6" lumber or larger wood bracing for added safety.

Installation Step :

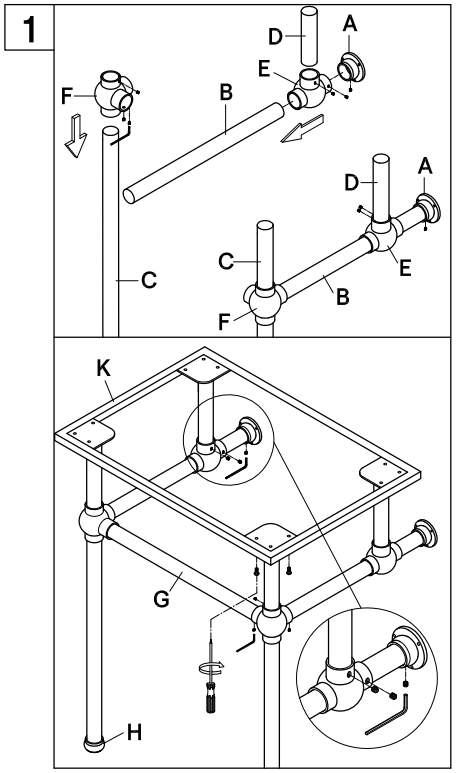

1. Start by assembling right and left support legs as shown on figure 1.
   If necessary refer to the parts breakdown chart included in these installation instructions, after assembling right & left sides of the support legs, attach front bar (G) to both sides, make sure to tighten all set screws on the leg support assembly. Attach the top flanges (A) to all 4 vertical posts, tighten set screws and attach top frame (K).

Tools Required

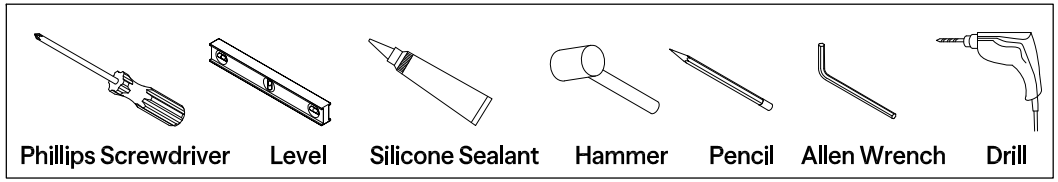

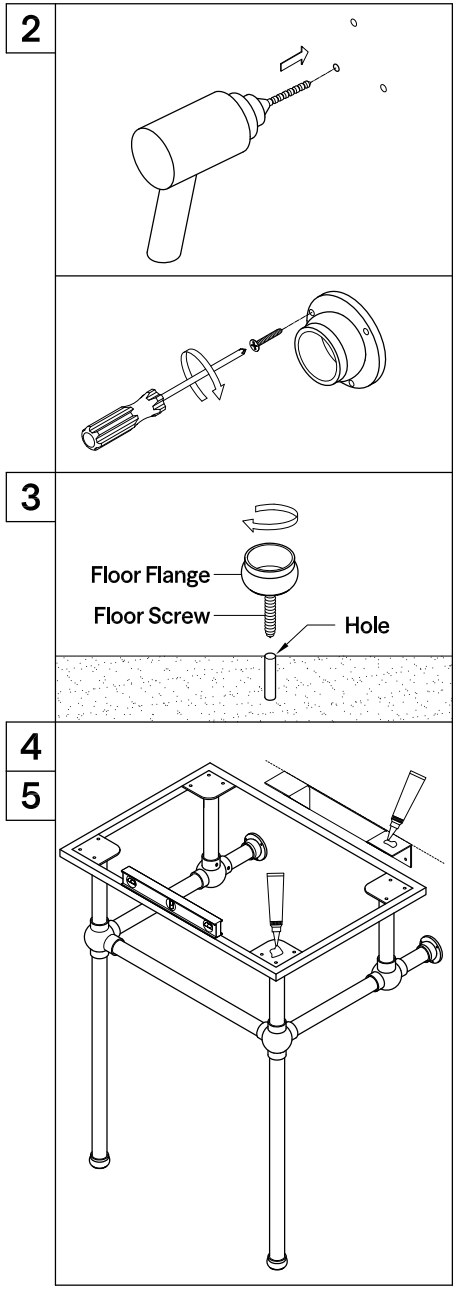

2. With the help of a second person position the leg support assembly at the desired location, make sure to level and plumb the leg support assembly, mark the location of the holes on the wall support flanges as well as the perimeter of the location where the legs will be secured to the floor, locate the center of the perimeter and drill 5/16" holes.
3. Reposition the assembled console base and secure to the wall, if you are unable to secure to wood bracing as specified, consult your contractor to specify the appropriate anchors needed for your application, add construction adhesive to the 2 holes on the floor, thread the floor flange and insert the legs into both floor flanges.
4. If you are using a VSPLBRKT wall bracket, using a level, mark a horizontal line at the height of the top of the frame of the leg support assembly and attach the bracket to the wood bracing at the line previously marked.
5. Apply silicone adhesive to the top of the console leg support assembly as well as to the top of the wall bracket. As well as to the back of the console top, place the top on top on the console leg assembly, wipe off any excess adhesive and let the adhesive cure as per the manufacturer's recommendation.

©2025 LVC Kingston LLC. All Rights Reserved.
2025-05-D