Important :

Before you begin Installation please read the following instructions, observe all local plumbing and building codes.

- Check area where tub will be installed to ensure that it is leveled and structurally sound.
- Please unwrap the tub and check it carefully for any damage that may have occurred during transportation.
- Check that all parts are included.
- If you have any missing parts, damage is found or have any questions regarding the installation process contact customer service at (877)-252-7277.
- Store bathtub in a safe place until you begin installation to avoid damage to the tub's surface.
- No claims for damages or blemishes will be accepted once the tub has been installed.
- We recommend that the installation of this tub be done by a qualified licensed professional.
- Because of its weight and volume we recommend that the installation of this tub be done with the help of at least one other person, a fall even what may seem like a minor one may result in cracking of the tub, moving straps and rubber gripped gloves are recommended.
- These Installation instructions do not include details of waste connections, the final details should be determined by your contractor.

Cleaning and Maintenance :

Because White Stone is a very durable non porous material, resistant to scratches, stains and discoloration, it is very easy to maintain, however, there are a few do's and don'ts that will ensure that your tub does not loose its luster throughout the years.

- Do clean it with a soft dry cloth after use.
- Do not use abrasive cleaners, cleaners containing acid, alkali or ammonia to remove stains.
- Do not expose the surface of this tub to hair dye or nail varnish as this may cause stains.

Your tub includes a sheet of extra fine grit sanding paper, If your tub develops minor scratches they may be removed by scrubbing gently with the fine grit sand paper, a soft brush or a non-abrasive sponge and a mild abrasive cream cleaner, in addition, should the minor scratches remain or you would like to polish the area in question to its original finish, you can perform the following procedure.

Gloss Finish :

- Clean the surface with water, making sure no dust remains.
- Using water, polish the area starting with 800 grit sand paper, then 1500 grit and finally 2000 grit, if a finer finish is desired you can give it a final sanding/polishing with 3000 grit sandpaper.
- Dry using a clean dry cloth.
- Polish with G3 or 3M extra cut Compound, wax and polish by hand or using a mechanical polishing machine.
- Wipe up the remaining wax with a clean and dry cloth.

Matte finish :

- Clean the surface with water, make sure no dust remains.
- Using water, polish the area starting with 800 grit sand paper.
- Wipe up the remaining wax with a clean dry cloth.

KINGSTON

AQUA EDEN

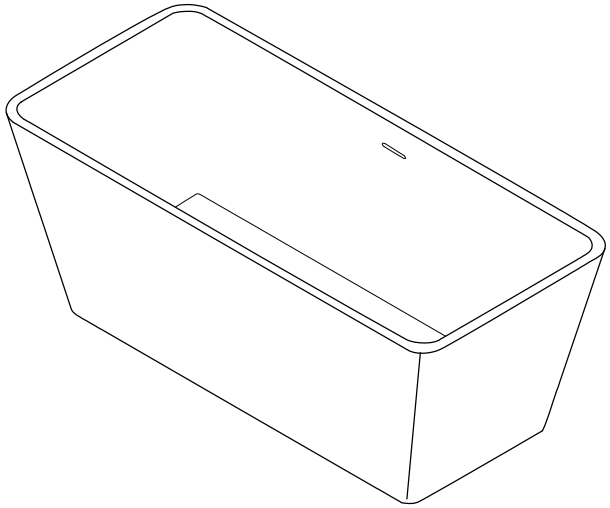

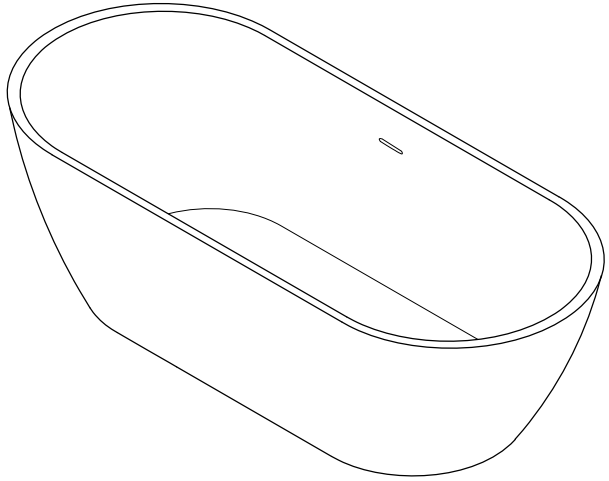

www.kingstonbrass.com

TOLL-FREE CUSTOMER SERVICE: 1-877-2-KBRASS
TECHNICAL SUPPORT E-mail: service@kingstonbrass.com
12775 Reservoir Street, Chino, CA 91710

NOTICE

Failure to follow all directions may cause leaks which may result in water damage



⚠WARNING

Lifting hazard.

Single person lift could cause injury.
Use assistance when moving or lifting.

KINGSTON

AQUA EDEN

Solid Surface White Stone Bathtub Installation Instructions

Caution :

This bathtub is heavy. Get help lifting and moving this tub. Read all instructions thoroughly before starting the installation.

Important Points to Remember :

1. Provide adequate floor support.
2. Make sure the subfloor is level. Provide drain access from below. Provide access to all plumbing connections. Observe local building and plumbing codes.

Tools Required

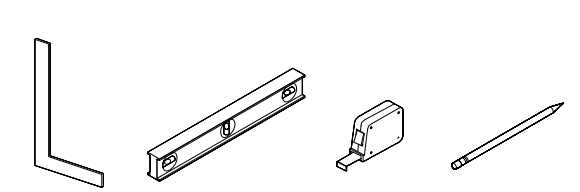

Conventional Woodworking Tools & Materials

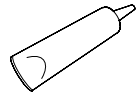

Silicone Sealant



Teflon Tape



Glue/ Epoxy

1

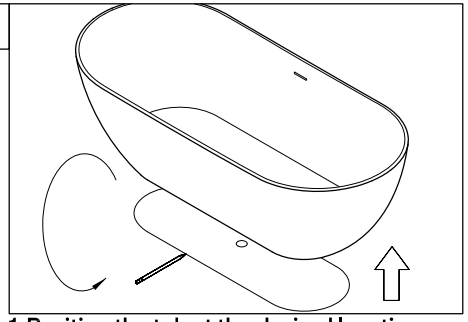

1. Position the tub at the desired location, with a pencil mark the perimeter of the tub, also mark the location of where the tub drain will be situated, remove tub and place upside down on a blanket or piece of cardboard.

2

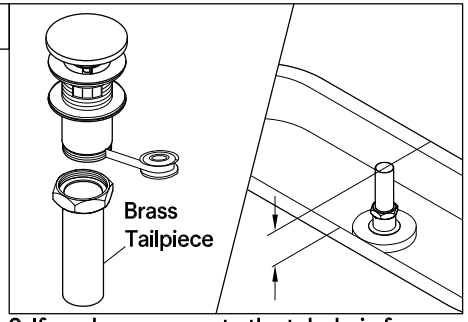

2. If you have access to the tub drain from below the floor, apply Teflon tape to the drain and thread the included tailpiece. Measure how far it protrudes from the bottom of the tub, then rough in your drain pipe accordingly.

3

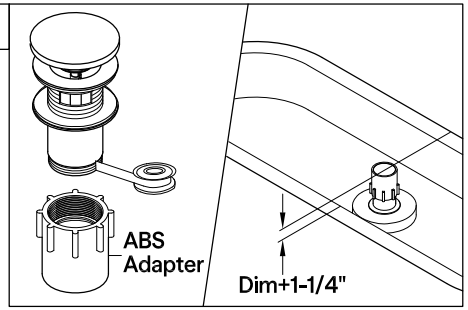

3. If you do not have access to the tub from below the floor, your tub includes an ABS adapter for a 1-1/2" drain, apply Teflon tape to the threading on the drain and install the tub drain adapter, tighten by hand until secure, measure the distance between the bottom of the drain adapter and the floor, add 1-1/4" that should give you the height of the drain pipe, you can measure the distance to the floor by placing a piece of lumber across the bottom of the tub and using that as your guide to determine the floor level.

4

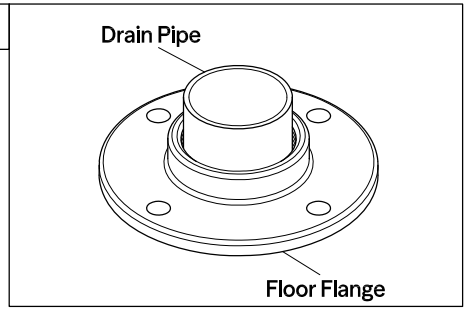

4. Secure floor flange to the area around the drain, this will serve as additional reinforcement to keep your tub drain in place in the event of any accidental impact on the tub.

5

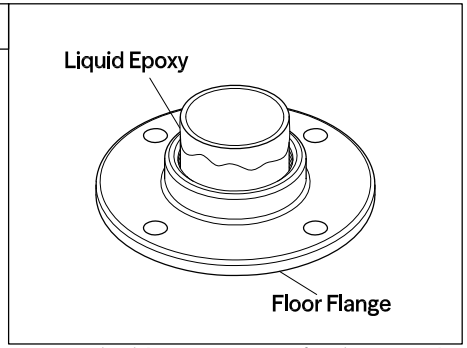

5. Apply liquid epoxy or a professional grade ABS glue or JB weld epoxy to the drain pipe coming from the floor, apply as per manufacturer's instructions.

6

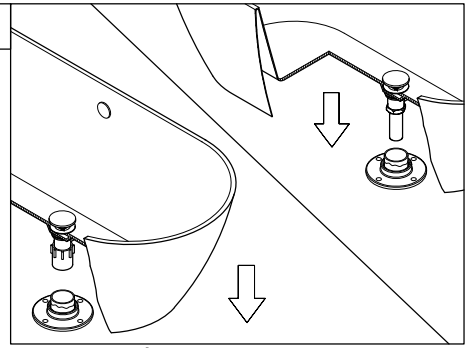

6. After Glue/ epoxy has been applied with the help of two or more people slowly pick up the tub and align the tub drain adapter to the drainage pipe, set tub in place.
If you installed the tailpiece to your drain, with the help of two or more people slowly pick up the tub and align the tailpiece to the drainage pipe, set tub in place, from below secure tailpiece to your drain pipe.

7

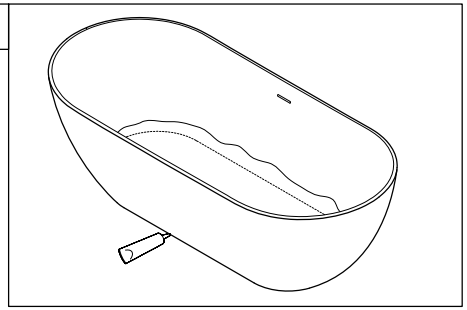

7. Close the drain and fill tub with 2" to 5" with water, while inspecting the connections from below the floor drain the tub and check for leaks.
Apply caulking around the perimeter as needed, clean excess caulking.

©2025 LVC Kingston LLC. All Rights Reserved.
2026-05-T

KINGSTON

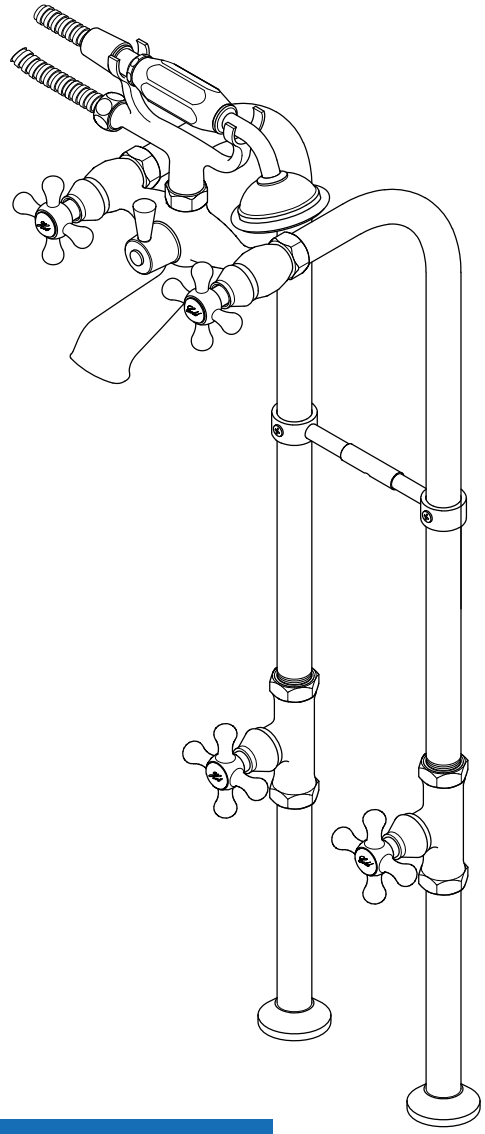

NOTICE

Failure to follow all directions may cause leaks which may result in water damage

www.kingstonbrass.com

TOLL-FREE CUSTOMER SERVICE: 1-877-2-KBRASS
TECHNICAL SUPPORT E-mail: service@kingstonbrass.com
12775 Reservoir Street, Chino, CA 91710

KINGSTON

Free standing supply lines

Installation Instructions

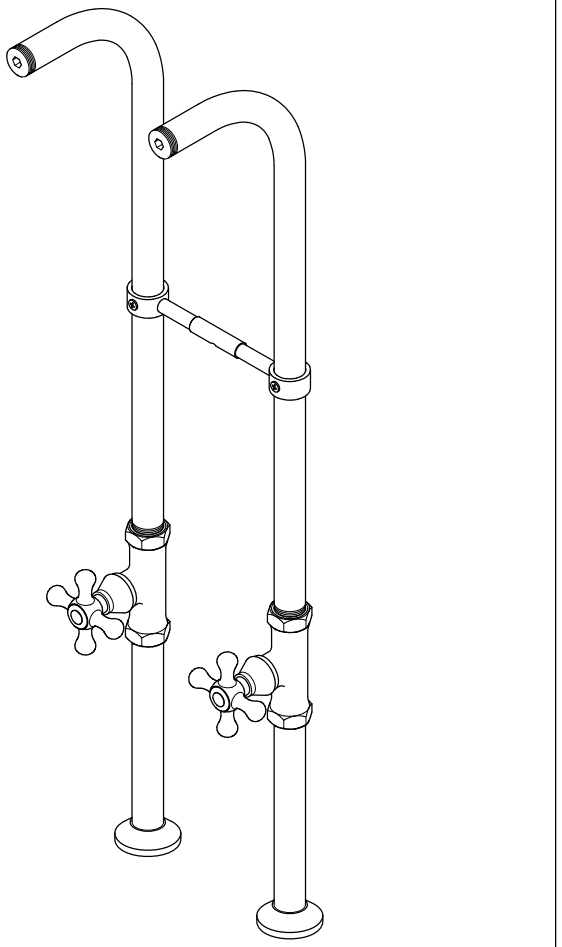

Parts:

Lock Nut	Washer & Coupling Nut	Washer
	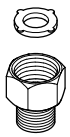	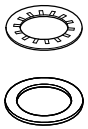
4 Pcs	2 Pcs	2 Pcs

www.kingstonbrass.com

TOLL-FREE CUSTOMER SERVICE: 1-877-2-KBRASS
TECHNICAL SUPPORT E-mail: service@kingstonbrass.com
12775 Reservoir Street, Chino, CA 91710

NOTICE

Failure to follow all directions may cause leaks which may result in water damage

This item is designed to be installed in wood floors. If you have a concrete floor it may be necessary to build a platform to accommodate the inlet connections refer to image on right.

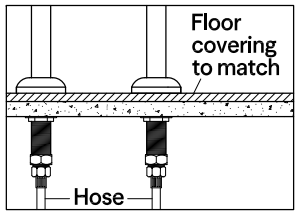

Before starting the installation of your supply lines you should:

- Verify the center to center of your faucet and rough in your supply lines.
  accordingly, flush lines to clear any debris left in the line.
- Allow a 6" minimum clearance below the floor to allow sufficient space.
  for attachment of the supply lines to the intended stub out.
- Drill 1" holes at the rough in location.

Installation Steps:

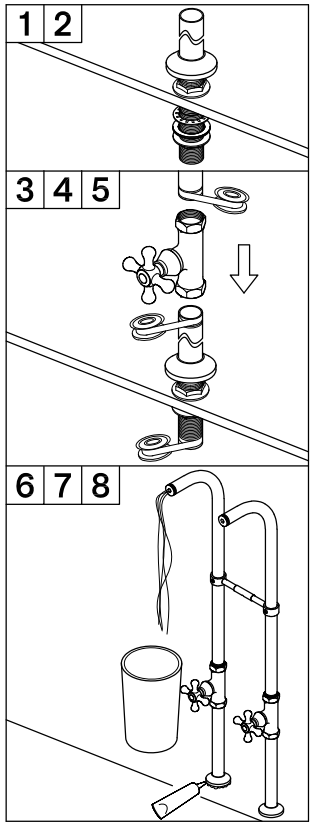

1. Insert horizontal bracket into the bottom of the 2 top risers, slide up to the desired level and tighten screws, insert flange on bottom risers.
2. Apply Teflon tape to both ends of the top riser as well as to the top portion of the lower riser.
3. Thread shut-off valve to bottom of top riser and to top portion of lower riser, make sure that the handles on the shut-off valve point in the same direction.
4. Thread locknut to the top of the bottom threads of the lower riser and insert through the pre-drilled holes on the floor.
5. Insert rubber washer and metal washer on the bottom riser, thread locknut and secure both supply lines from below the floor.
6. If your inlet supplies stub-outs are 3/4" apply Teflon tape and thread your intended water supplies, if your inlet supply stub-outs are 1/2" apply Teflon tape to the bottom of lower riser and thread 1/2" adapter (included) apply Teflon tape to 1/2" threads on adapter and thread on your supply stub out.
7. From above the floor apply a bead of silicon based caulking to the bottom of the flange and press to the floor to form a water proof barrier.
8. While holding a bucket at the outlet of the supply lines, open each valve and let water run for 30 seconds, check for leaks.

※ Please pass this installation manual to homeowner after installation.

Warning!!!

Reshaping, bending or altering supply line or use of nuts or washers not supplied with this kit will void your warranty.
Please do not pull or lean on the faucet once it has been installed, this may bend or pull the supply line which may cause a leak resulting in possible water damage.

©2025 LVC Kingston LLC. All Rights Reserved.

2025-05-KB

KINGSTON

INSTALLATION INSTRUCTIONS
Tub Filler with Supply Line & Stop Valve

BEFORE BEGINNING INSTALLATION:

1. Flush plumbing lines to clear any debris.
2. Shut off both supply lines after flushing.

Need Tools:

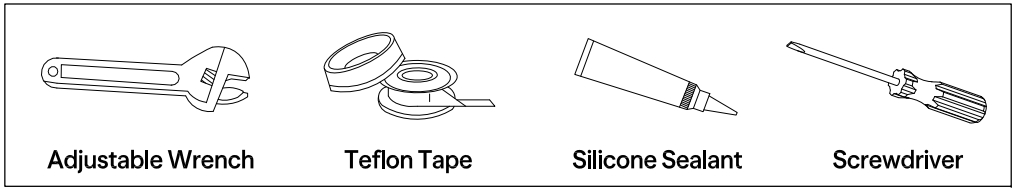

9

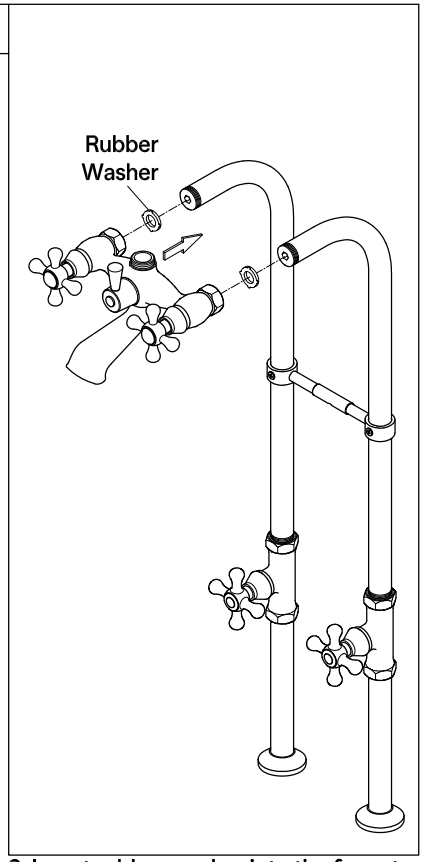

9. Insert rubber washer into the faucets inlet and thread onto the supply lines.

10

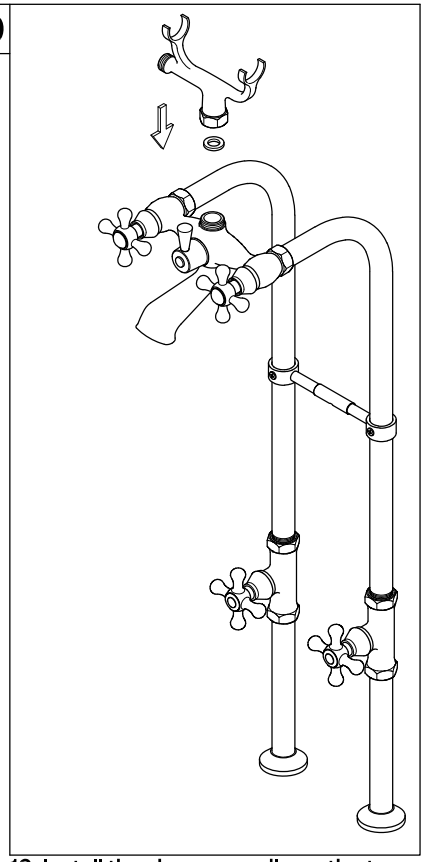

10. Install the shower cradle on the top outlet of faucet body.

11

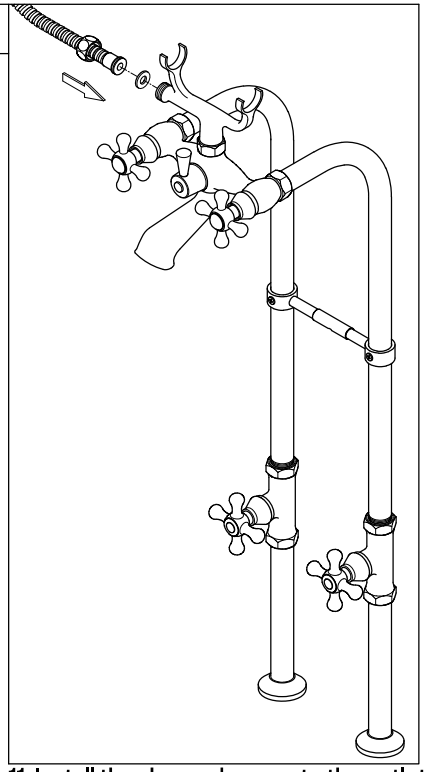

11. Install the shower hose onto the outlet of the shower cradle.

12

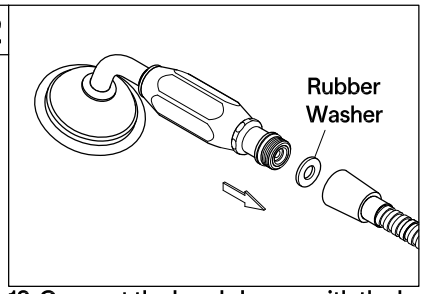

12. Connect the hand shower with the hose.

13

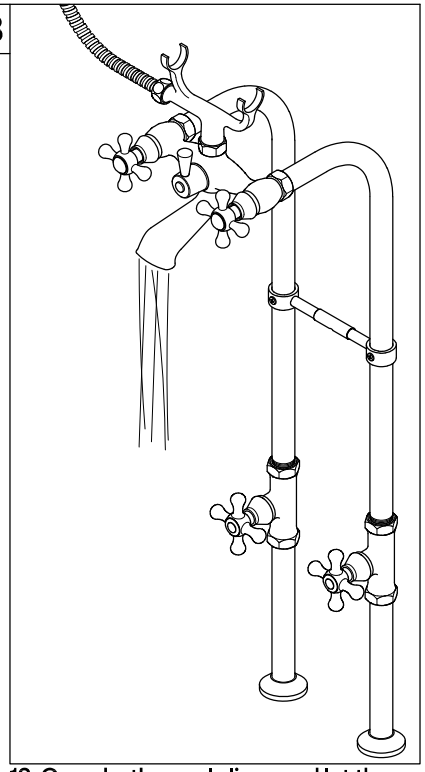

13. Open both supply lines and let the water run from the hose as well as the spout for at least 1 minute, check for leaks.

Warning!!!

- Do not put any weight, step, or hang on any part of this faucet, this may damage the faucet and cause water damage.
- This faucet was tested and meets ASME/ANSI standards of operation and torque tension; do not use pneumatic or electrical tools for its installation, as this may inadvertently over tighten the connection or attachment hardware of this faucet.
- It is recommended that the tub be situated in an area where the supply lines are not exposed to foot traffic, bumping into the supply lines may damage them and potentially cause a leak.

©2025 LVC Kingston LLC. All Rights Reserved.
2025-05-D