Parts:

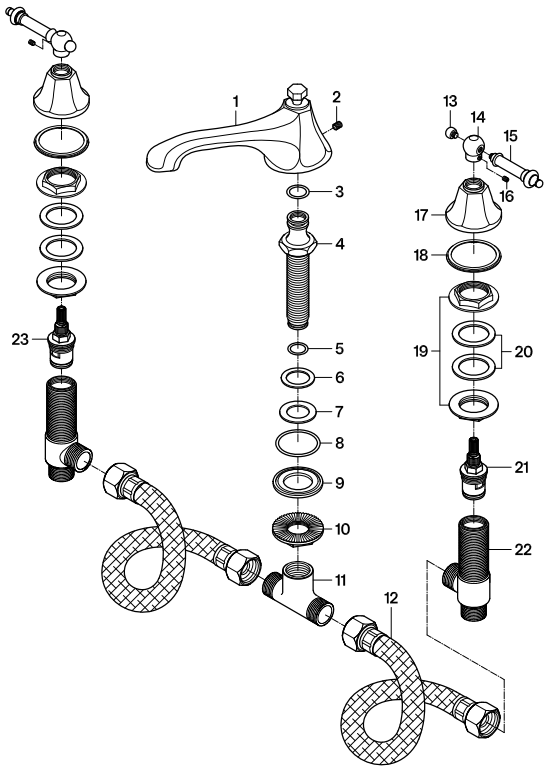

Replacement Parts:

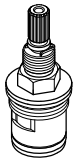

Hot Cartridge:
KSRPT5000HC

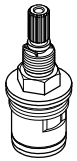

Cold Cartridge:
KSRPT5000CC

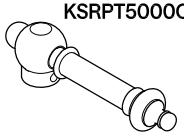

Handle: KSH2981TL

KINGSTON

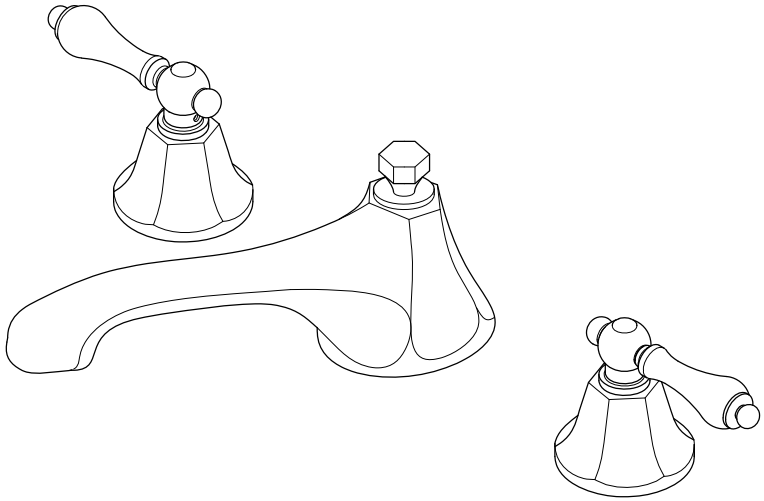

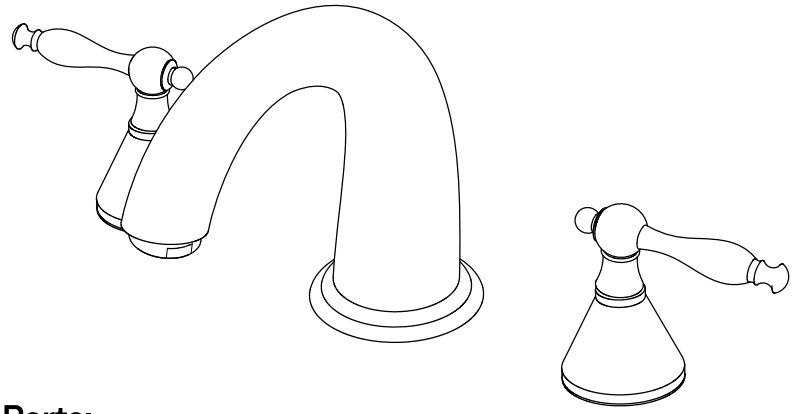

CARE AND MAINTENANCE OF YOUR FAUCET

Your KINGSTON faucet has been finished to the most strict standards; however, due to the high content of minerals in the water, your finish may appear dull and tarnished after time. These are some do's and don'ts to maintain the luster on your faucet for many years to come.

DO
1. Use a silicon based caulking when installing.
2. Clean your faucet with only a mild soap and water solution.
3. Dry your faucet after using it.
4. Give it a coat of Carnauba Wax periodically.

DON'T
1. Use plumbers putty when installing the faucet.
2. Use any abrasive cleaning agents.

It may seem like a very simple and short list but it is that simple to maintain your faucet, looking shiny and new.

If your faucet is already looking somewhat dull and tarnished, before replacing it, try cleaning it with a 50/50 solution of vinegar and water, you may need to soak some rags and wrap around those stubborn areas, leave
overnight and rinse completely in the morning, apply Carnauba wax once you have removed the mineral deposits.

Parts:

Lock Nut & Washer


4 Pcs

www.kingstonbrass.com

TOLL-FREE CUSTOMER SERVICE: 1-877-2-KBRASS
TECHNICAL SUPPORT E-mail: service@kingstonbrass.com
12775 Reservoir Street, Chino, CA 91710

NOTICE

Failure to follow all directions may cause leaks which may result in water damage

KINGSTON

INSTALLATION INSTRUCTIONS
Roman Tub Filler

BEFORE BEGINNING INSTALLATION:

1. Flush plumbing lines to clear any debris.
2. Shut off both supply lines after flushing.

1

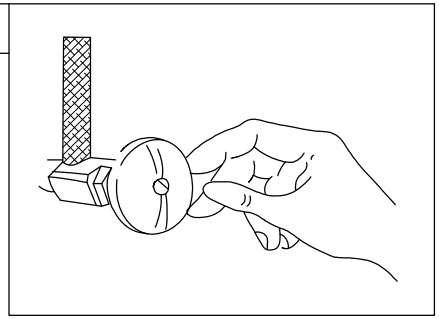

1. Shut off hot and cold water supply. Remove old faucet.

2

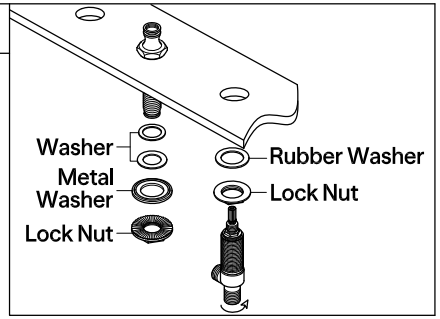

2. Remove all nuts and washer from the spout shank, insert brass base ring onto the spout shank, rubber ring should be on the side which will be in direct contact with the tub deck, insert the spout shank through center hole from above, insert washers and tighten lock nut from below. Thread bottom lock nut and insert washer into hot and cold valve, and insert them through the side holes.

3

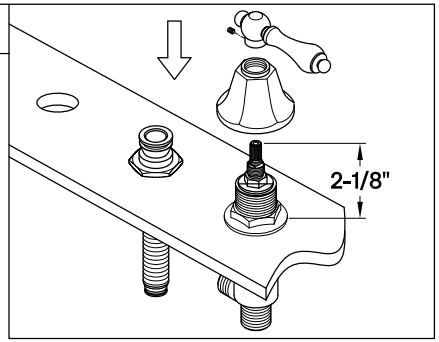

3. While holding from underneath tub, thread top lock nut from above, set height of stem at 2-1/8" from the deck to the tip of the stem. Secure both top and bottom lock nuts. Do not over tighten lock nut as this may cause undue stress on stem body and cause leaking, which may result in water damage.
Thread escutcheon onto valve assembly and install the handle.

4

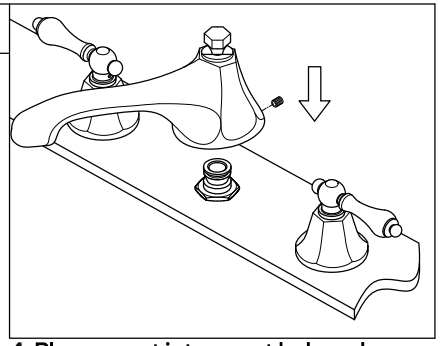

4. Place spout into spout hub and tighten set screw with Allen wrench. Complete installation by inserting set screw hole cover into access hole at the back of spout. Apply 1~2 wraps of Teflon tape to the spout shank, thread and secure "T" connector to spout shank.

Warning!!!

- Do not over-tighten nut during installation.
- Over-tighten may crack the valve and cause severe leak.

Need Tools:

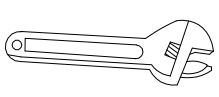

Adjustable Wrench



Teflon Tape

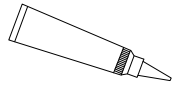

Silicone Sealant

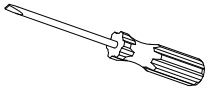

Screwdriver

5

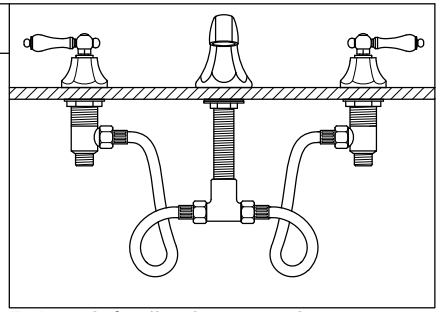

5. Attach flexible hoses to the outlet ports of the hot and cold valve assembly. You may need to loop the hoses as shown in the graphic, and be careful not to overtighten.

6

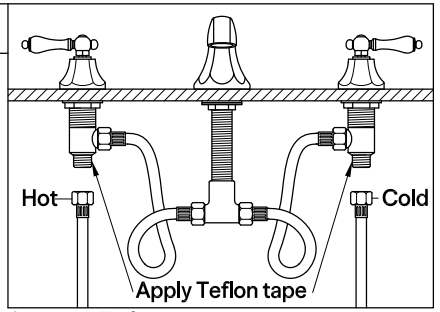

6. Apply Teflon tape on all male threading and install inlet supply lines (not included) to bottom inlet port of hot and cold valve assembly.

7

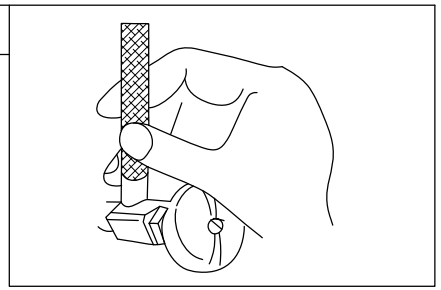

7. Turn on water supply valves and check for leaks, especially all supply line connections.

8

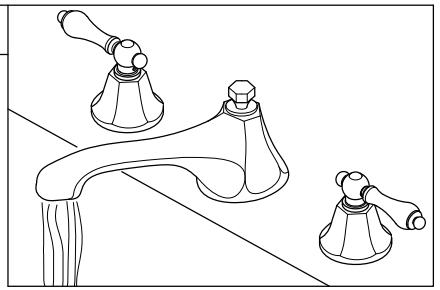

8. Turn on the faucet, let water run for at least one minute, this will clear any debris left in the line.

Warning!!!

- DO NOT STEP ON faucet or supply line installation. This fixture is not a stair to access your storage, window or access higher ceiling. This Cast Brass Faucet cannot support your body weight. To step on faucet will crack the fitting and eventual fracture to cause water damage to your property.
- The faucet was tested and meets ASME/ANSI code on its operation, loading and torque pressure. However this faucet is not designed to support weight over 250 pound per square inch of pressure, DO NOT OVERTIGHTEN.
  DO NOT APPLY ELECTRICAL TOOL to fasten faucet installation.
- For Exposed tub supply line installation faucet model, your supply lines have to be installed on corner area, or at area with no walking traffic access to cause accidental tamper or accidental breakage. For installation of exposed supply line at open traffic area is prohibited.
- Removal of this tag prior to installation will void your warranty. Pass the WARNING TAG to the owner after installation.

©2025 LVC Kingston LLC. All Rights Reserved.
2025-12-G