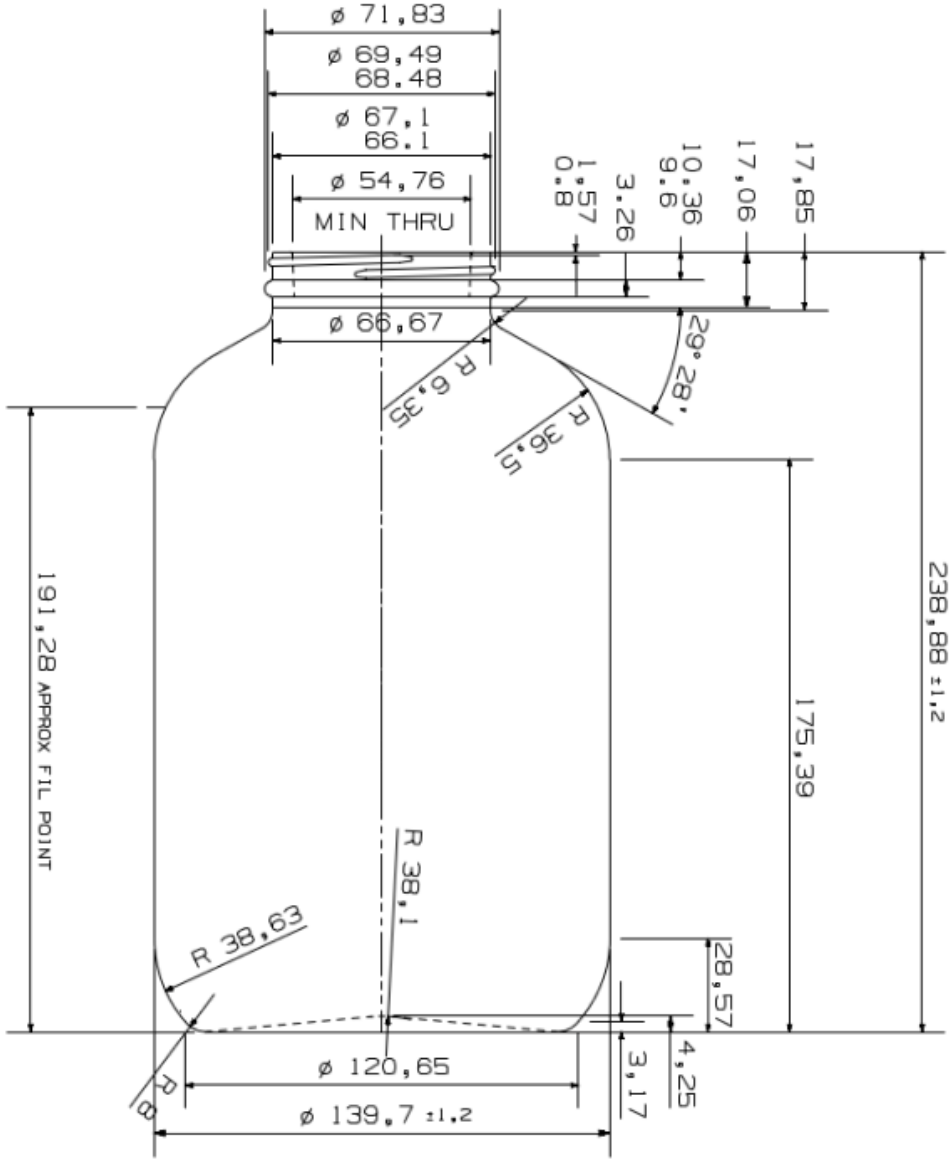

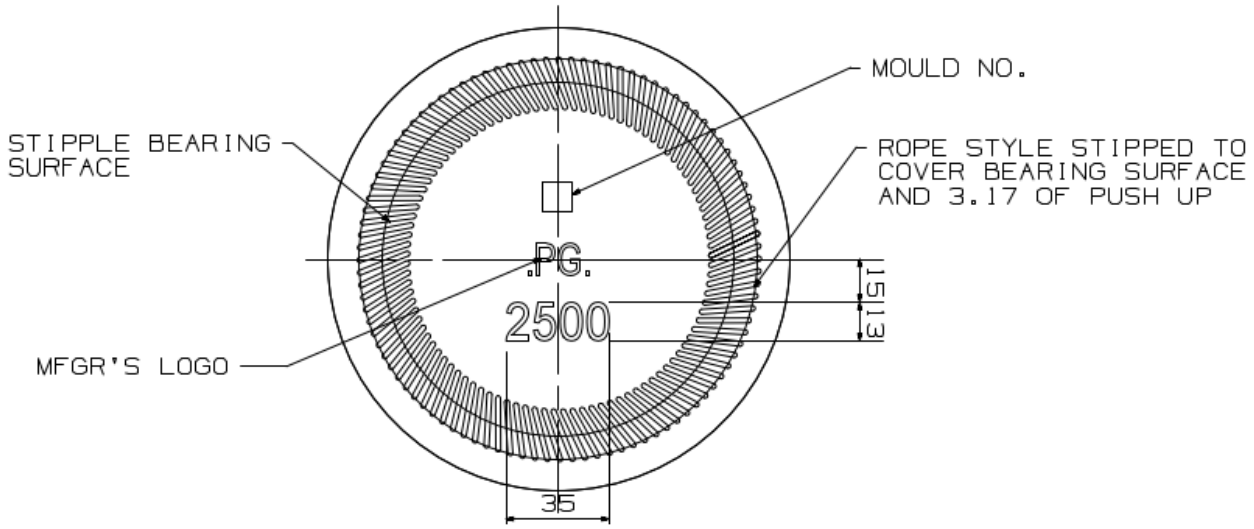

DISTRIBUTED BY: Pipeline Packaging

REF NO.: DWG30242

DESCRIPTION: 2500 cc Glass Packer Jar

DISCLAIMER

THIS INFORMATION IS PROVIDED AS A GENERAL GUIDE, INCLUDING DIMENSIONS. IT IS THE CUSTOMER'S RESPONSIBILITIES TO SELECT THE PROPER CONTAINER FOR PRODUCT AND APPLICATION COMPATIBILITY.