Parts:

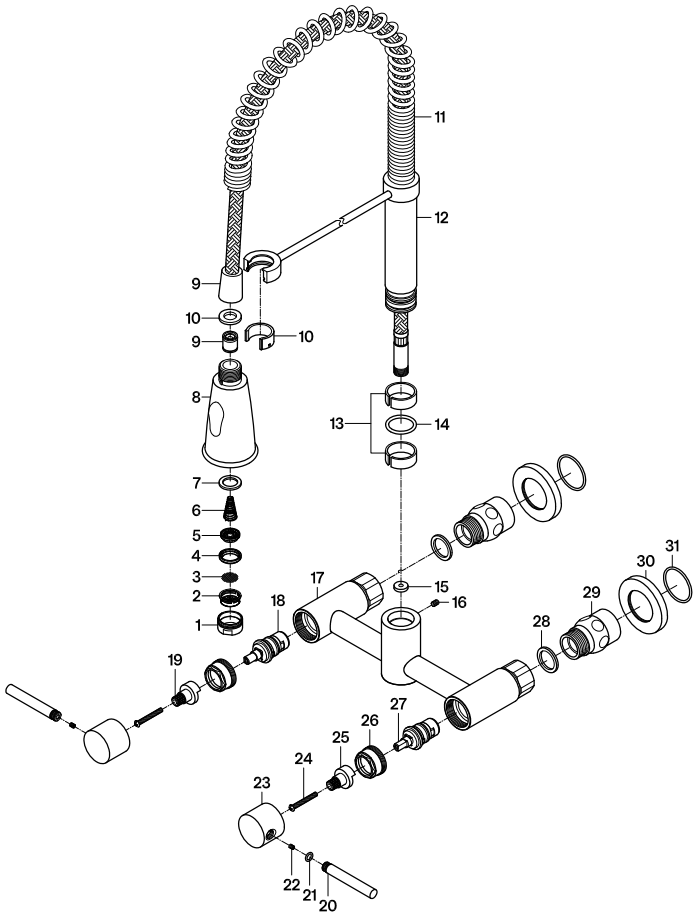

Replacement Parts:



Hot Cartridge:
KSRPL8100HC

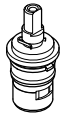

Cold Cartridge:
KSRPL8100CC

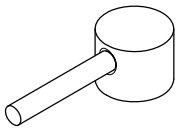

Handle: KSH8271DL

KINGSTON

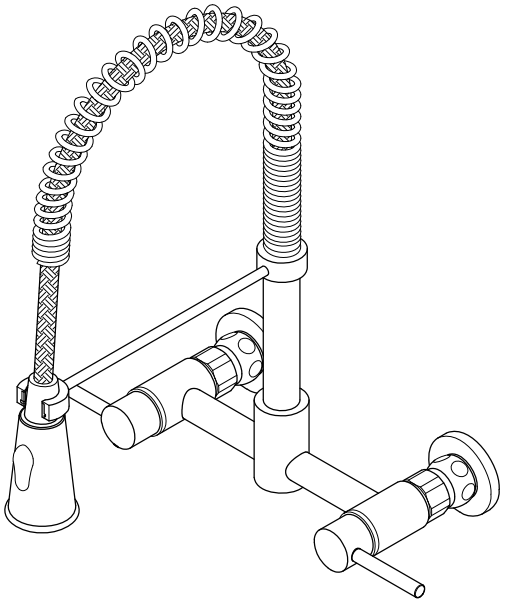

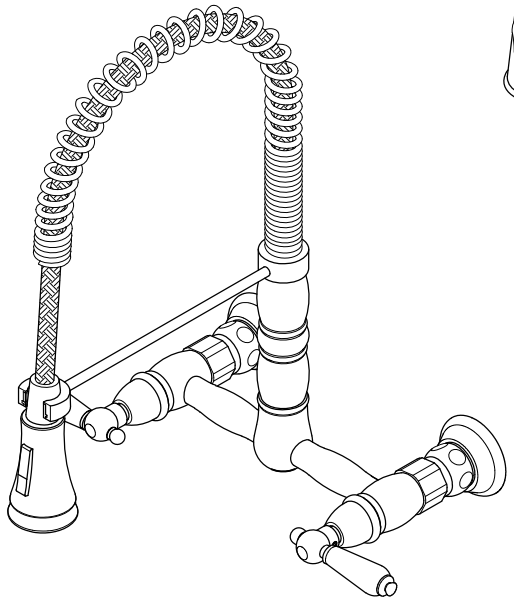

CARE AND MAINTENANCE OF YOUR FAUCET

Your KINGSTON faucet has been finished to the most strict standards; however, due to the high content of minerals in the water, your finish may appear dull and tarnished after time. These are some do's and don'ts to maintain the luster on your faucet for many years to come.

DO
1. Use a silicon based caulking when installing.
2. Clean your faucet with only a mild soap and water solution.
3. Dry your faucet after using it.
4. Give it a coat of Carnauba Wax periodically.

DON'T
1. Use plumbers putty when installing the faucet.
2. Use any abrasive cleaning agents.

It may seem like a very simple and short list but it is that simple to maintain your faucet, looking shiny and new.

If your faucet is already looking somewhat dull and tarnished, before replacing it, try cleaning it with a 50/50 solution of vinegar and water, you may need to soak some rags and wrap around those stubborn areas, leave
overnight and rinse completely in the morning, apply Carnauba wax once you have removed the mineral deposits.

www.kingstonbrass.com

TOLL-FREE CUSTOMER SERVICE: 1-877-2-KBRASS
TECHNICAL SUPPORT E-mail: service@kingstonbrass.com
12775 Reservoir Street, Chino, CA 91710

NOTICE

Failure to follow all directions may cause leaks which may result in water damage

⚠CAUTION

Failure to follow all installation directions may cause product to detach from the wall and cause serious injury

KINGSTON

INSTALLATION INSTRUCTIONS
Twin Handles Wall Mount Kitchen Faucet

BEFORE BEGINNING INSTALLATION:

1. Flush plumbing lines to clear any debris.
2. Shut off both supply lines after flushing.

Need Tools:

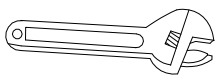

Adjustable Wrench



Teflon Tape

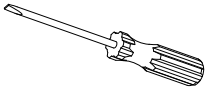

Screwdriver

1

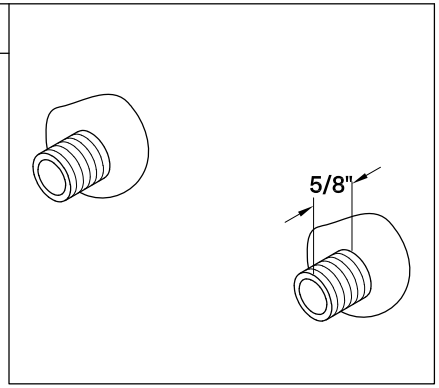

1. Plumb two 1/2 -14 NPT nipples protruding from the finished wall 5/8" at 8" center to center.

2

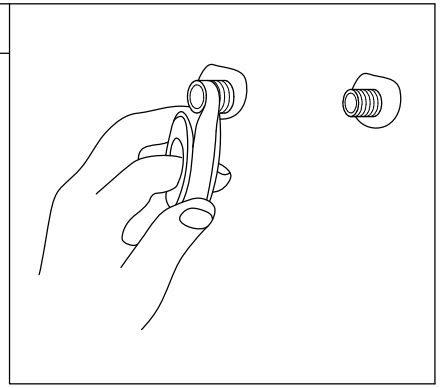

2. Apply Teflon tape to the threads of both stub-out supply nipples.

5

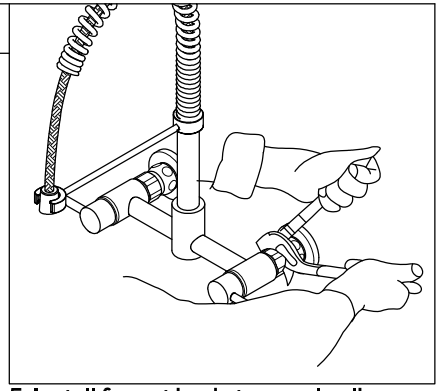

5. Install faucet body to supply elbows and tighten with an adjustable wrench.

6

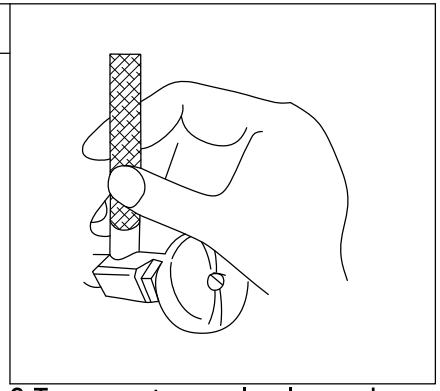

6. Turn on water supply valves and check for leaks, especially all supply line connections.

3

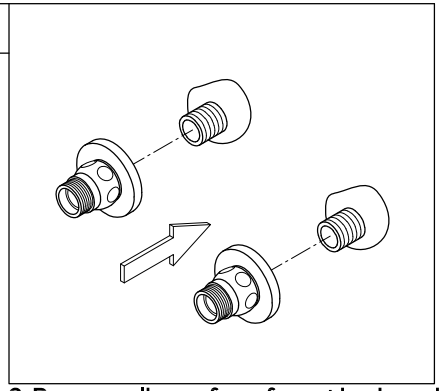

3. Remove elbows from faucet body and install to water outlet on wall with an adjustable wrench. Do Not Over-tighten.

4

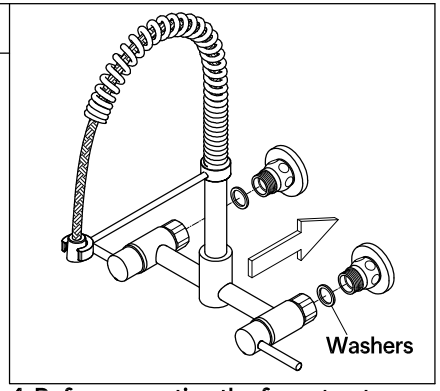

4. Before mounting the faucet onto supply elbows, apply small black washers onto both elbows.

7

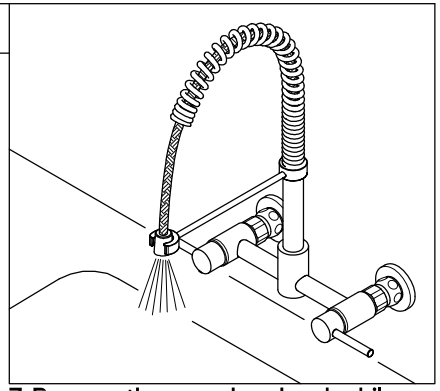

7. Remove the spray head and, while holding the hose over the drain, turn on the faucet for at least one minute. This will help clear the line of any debris. Be sure to check for leaks during this process.

8

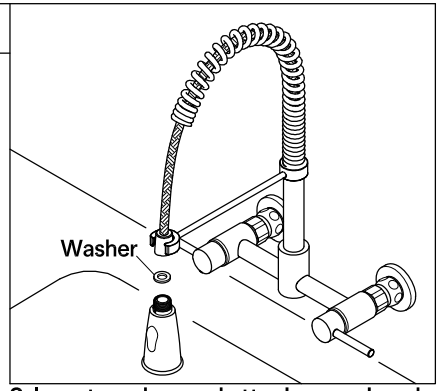

8. Insert washer and attach spray head, insert spray head onto faucet body.

©2025 LVC Kingston LLC. All Rights Reserved.
2025-09-TG