KINGSTON

TO ORDER PARTS, CALL: 1-877-252-7277
www.kingstonbrass.com

KSR360,1,5,7,8

36" to 60" Adjustable Shower Curtain Rod with Rings

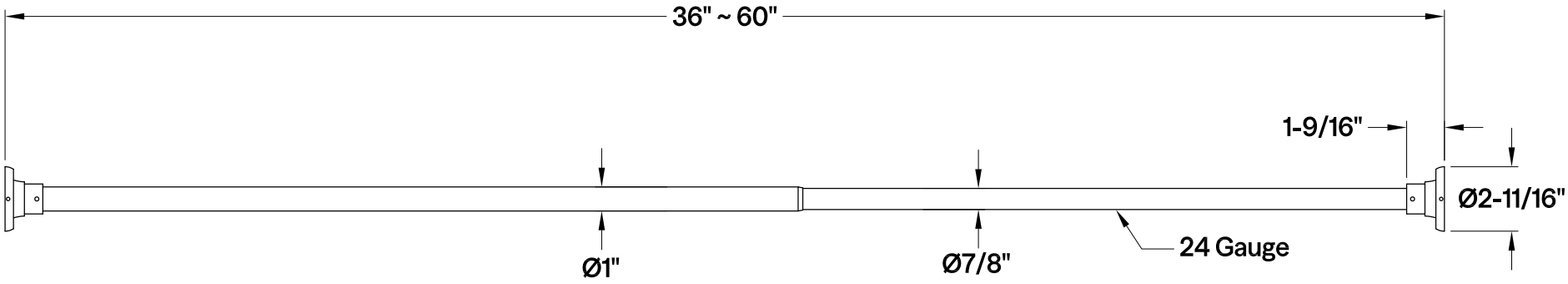

Roller Ball Shower Curtain Ring (12 pcs)

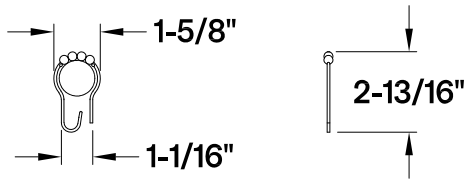

2026-05-A