NOTES:

1 OPEN DOOR VIEW INCLUDES HINGE SPACE OFFSET.

PRODUCT	W1	L1	G1	DRAWER FRONT SIZE	DOOR SIZE
			ROUNDED TO THE NEARST 1/32		
SB30	30"	14 1/32"	(3/16")	28 1/32" X 5 23/32"	13 29/32" X 21 11/32"
SB33	33"	15 1/2"	(3/16")	31 1/32" X 5 23/32"	15 13/32" X 21 11/32"
SB36	36"	17"	(3/16")	34 1/32" X 5 23/32"	16 29/32" X 21 11/32"
SB39	39"	17 19/32"	(2")	37 1/32" X 5 23/32"	17 17/32" X 21 11/32"

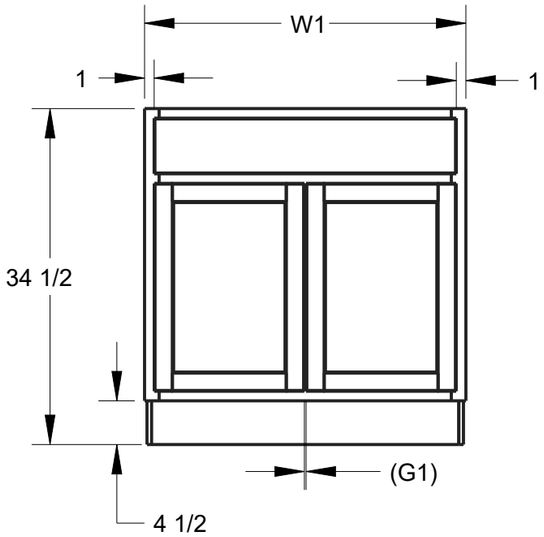

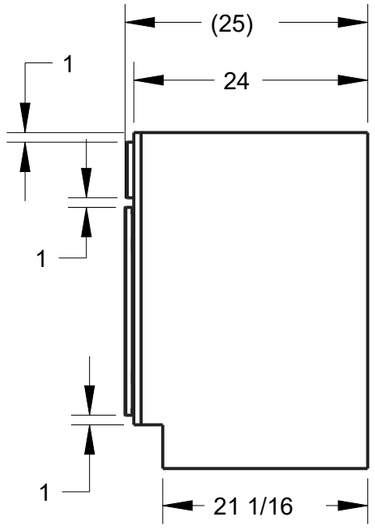

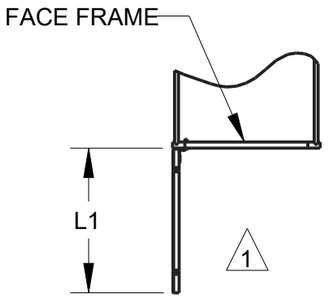

OPEN DOOR

PRODUCT SHOWN SB33

DOCUMENT STATUS: **Released**

THIRD ANGLE PROJECTION

MATERIAL	FINISH
N/A	N/A
DRAWN BY ANDY BROWN	DATE 27MAR2021
DESIGNED BY NORTHPOINT	DATE
APPROVED BY E. GOLESTANYAN	DATE 26MAR2021

DESCRIPTION: SB30, SB33, SB36, SB39 HALF OVERLAY

DRAWING NUMBER: SB30-SB33-SB36-B39_HALF_OVERLAY

REV: A

SIZE: A3 | SCALE: 0.071 | SHEET: 1 / 1

HARDWARE RESOURCES RESERVES THE RIGHT TO CHANGE SPECIFICATIONS WITHOUT NOTICE.
IN CASE OF A DISCREPENCY, ACTUAL PART GEOMETRY SUPERSEDES THIS DOCUMENT.

THE INFORMATION CONTAINED WITHIN THIS DRAWING IS THE SOLE PROPERTY OF HARDWARE RESOURCES INC. ANY REPRODUCTION IN PART OR WHOLE WITHOUT WRITTEN PERMISSION OF HARDWARE RESOURCES INC. IS PROHIBITED.