NOTES:

1. OPEN DOOR VIEW INCLUDES HINGE SPACE OFFSET.

PRODUCT	DRAWER 1&3 FRONT SIZE	DRAWER 2 FRONT SIZE	DRAWER 4,5,6&7 FRONT SIZE	DOOR SIZE
	ROUNDED TO THE NEAREST 1/32			
VCDB-6	14 17/32" X 6 7/32"	29 17/32" X 6 7/32"	14 17/32" X 11 5/16"	14 11/16" X 22 27/32"

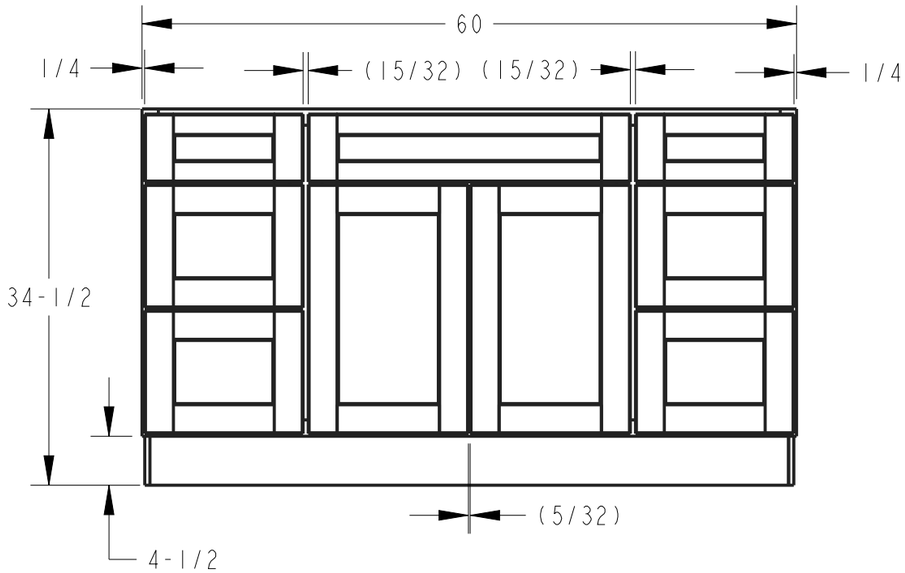

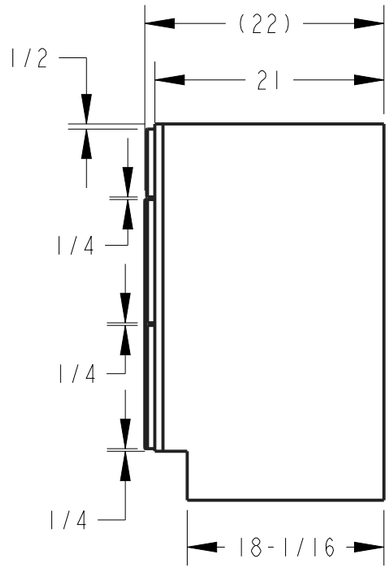

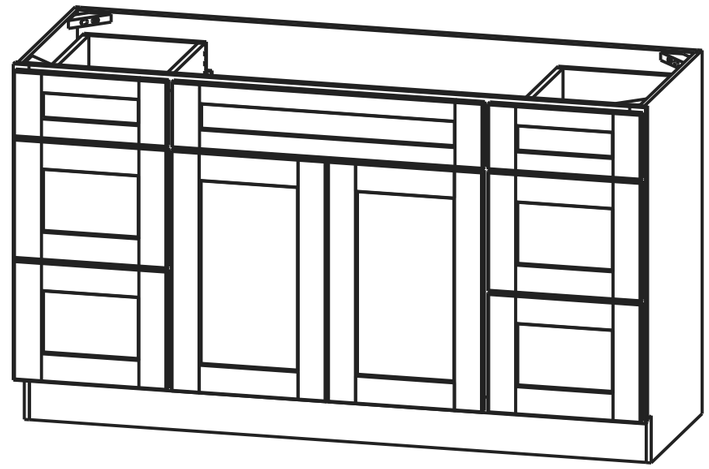

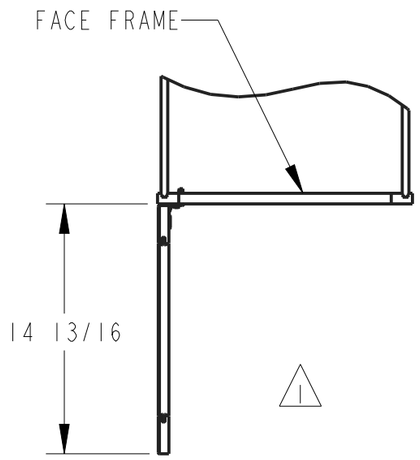

OPEN DOOR

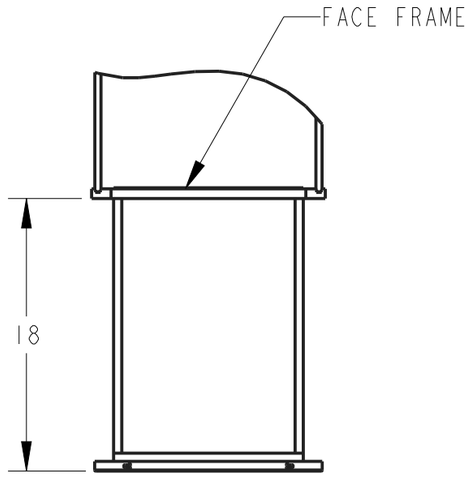

OPEN DRAWER

THIRD ANGLE PROJECTION		hardware resources	
MATERIAL: N/A	FINISH: N/A	DESCRIPTION: VCDB-6 FULL OVERLAY	
DRAWN BY: ANDY BROWN	DATE: 01APR2020		
DESIGNED BY: NORTHPOINT	DATE:	DRAWING NUMBER: VCDB-6_FULL_OVERLAY	REV: A
APPROVED BY: GREG DAVIS	DATE: 02APR2020	SIZE: A3 / SCALE: 0.071	SHEET: 1 / 1

DOCUMENT STATUS **Released**

HARDWARE RESOURCES RESERVES THE RIGHT TO CHANGE SPECIFICATIONS WITHOUT NOTICE.
IN CASE OF A DISCREPENCY, ACTUAL PART GEOMETRY SUPERSEDES THIS DOCUMENT.

THE INFORMATION CONTAINED WITHIN THIS DRAWING IS THE SOLE PROPERTY OF HARDWARE RESOURCES INC. ANY REPRODUCTION IN PART OR WHOLE WITHOUT WRITTEN PERMISSION OF HARDWARE RESOURCES INC. IS PROHIBITED.