

Network | Multi-sensor

PNM-9031RV

15MP Panoramic Camera

Key Features

- Max. 15MP 192° panoramic stitching image
- Panoramic channel
- IR viewable length Maximum 20m (65.6ft), WiseIR
- H.265 / H.264 : Max. 20fps
- MJPEG : Max. 15fps
- H.265, H.264, MJPEG codec, WiseStreamII supported
- Motion, Defocus detection, Virtual line, Enter / Exit
- (Dis)Appear, Audio detection,Motion detection, Handover, Heatmap
- microSD/SDHC/SDXC 2 slots, PoE+,
- IP66, IK10, NEMA4X
- TPM 2.0 (FIPS 140-2 level 2)

Design and specifications are subject to change without notice. The latest product information / specification can be found at HanwhaVision.com
Hanwha Vision is formerly known as Hanwha Techwin.

© Hanwha Vision CO., LTD. All rights reserved.

PNM-9031RV

15MP Panoramic Camera



Specifications

Video	
Imaging Device	1/2.8" 5MP CMOS (x4)
Resolution	6720x2240, 5952x1984, 4992x1664, 3840x1280, 3072x1024, 1920x640, 1152x384
Max. Framerate	H.265/H.264: Max. 20fps/20fps(60Hz/50Hz)@15MP MJPEG: Max. 15fps(60Hz/50Hz)
Min. Illumination	Color: 0.1Lux(F1.6, 1/30sec) BW: 0.01Lux(F1.6, 1/30sec), 0Lux(IR LED on)
Video Out	USB : Micro USB Type B, 1280x720 for installation

Lens	
Focal Length (Zoom Ratio)	4.3mm Fixed
Max. Aperture Ratio	F1.6
Angular Field of View	Min (Distance 5m) H: 195.3° x V: 63.6° / Max (Distance 100m) H: 197.0° x 63.6°
Min. Object Distance	5m(16.4ft)
Focus Control	Fixed

Pan / Tilt / Rotate	
Pan / Tilt / Rotate Range	0~360° / 0~60° / -

Operational	
Camera Title	Displayed up to 85 characters
Day & Night	Auto(ICR)
Backlight Compensation	BLC, WDR, SSDR
Wide Dynamic Range	120dB
Digital Noise Reduction	SSNR V
Defog	Not Support
Motion Detection	8ea, 8point polygonal zones
Privacy Masking	6ea, rectangular zones - Color: Grey/Green/Red/Blue/Black/White
Gain Control	Low / Middle / High
White Balance	ATW / AWC / Manual / Indoor / Outdoor
Electronic Shutter Speed	Minimum / Maximum / Anti flicker (2~1/12,000sec)
Video Rotation	Flip, Mirror
Analytics	Defocus detection, Motion detection, Appear/Disappear, Enter/Exit, Tampering, Virtual line, Audio detection
Business Intelligence	Heatmap
Alarm I/O	Selectable 2 port
Alarm Triggers	Analytics, Network disconnect, Alarm input

Design and specifications are subject to change without notice. The latest product information / specification can be found at HanwhaVision.com
Hanwha Vision is formerly known as Hanwha Techwin.

© Hanwha Vision CO., LTD. All rights reserved.

Alarm Events	File upload via FTP and e-mail Notification via e-mail SD/SDHC/SDXC at event triggers Alarm output
Audio In	Selectable(mic in/line in) Supply voltage: 2.5VDC(4mA), Input impedance: 2K Ohm
Audio Out	Line out, Max.output level: 1Vrms
IR Viewable Length	20m(65.5ft), Wise IR 4 individual zones with Automatic and Manual level adjustment

Network	
Ethernet	Metal shielded RJ-45(10/100/1000BASE-T)
Video Compression	H.265/H.264: Main/Baseline/High, MJPEG
Audio Compression	G.711 u-law /G.726 Selectable G.726(ADPCM) 8KHz, G.711 8KHz G.726: 16Kbps, 24Kbps, 32Kbps, 40Kbps AAC-LC: 48Kbps at 16KHz
Smart Codec	Manual(5ea area), WiseStream II
Bitrate Control	H.264/H.265: CBR or VBR MJPEG: VBR
Streaming	Unicast(15 users) / Multicast Multicast Multiple streaming(Up to 5 profiles)
Protocol	IPv4, IPv6, TCP/IP, UDP/IP, RTP(UDP), RTP(TCP), RTCP, RTSP, NTP, HTTP, HTTPS, SSL/TLS, DHCP, FTP, SMTP, ICMP, IGMP, SNMPv1/v2c/v3(MIB-2), ARP, DNS, DDNS, QoS, PIM-SM, UPnP, Bonjour, LLDP
Security	HTTPS(SSL) Login Authentication Digest Login Authentication IP Address Filtering User access log 802.1X Authentication(EAP-TLS, EAP-LEAP) Device Certificate(Hanwha Techwin Root CA) TPM 2.0 (FIPS 140-2 level 2)
Application Programming Interface	ONVIF Profile S/G/T SUNAPI(HTTP API)

General	
Webpage Language	English, Korean, Chinese, French, Italian, Spanish, German, Japanese, Russian, Swedish,, Portuguese, Czech, Polish, Turkish, Dutch, Hungarian, Greek
Edge Storage	Micro SD/SDHC/SDXC 2slots 512GB (256GBx2) SD card encription
Memory	8GB RAM, 4GB Flash

Environmental & Electrical	
Operating Temperature / Humidity	- Normal : -40°C~+55°(-40°F ~ +131°F) / - Intermittent : -40°C~+60°C(-40°F ~ +140°F), 8Hrs - Less than 95% RH(Non-condensing) * Startup should be above -30°C “
Storage Temperature / Humidity	-50°C~+60°C(-58°F~+140°F) / Less than 90% RH
Certification	IP66, IK10, NEMA4X
Input Voltage	PoE+ (IEEE802.3at, Class4), 12VDC
Power Consumption	PoE+: Max 23.5W, Typical 18.0W 12VDC: Max 20.5W, Typical 16.0W

Mechanical	
Color / Material	White / Aluminum
RAL Code	RAL9003
Product Dimensions / Weight	Ø253x170mm / 2.9Kg

Design and specifications are subject to change without notice. The latest product information / specification can be found at HanwhaVision.com
Hanwha Vision is formerly known as Hanwha Techwin.

© Hanwha Vision CO., LTD. All rights reserved.

PNM-9031RV

15MP Panoramic Camera



CAD

Unit:mm [inch]

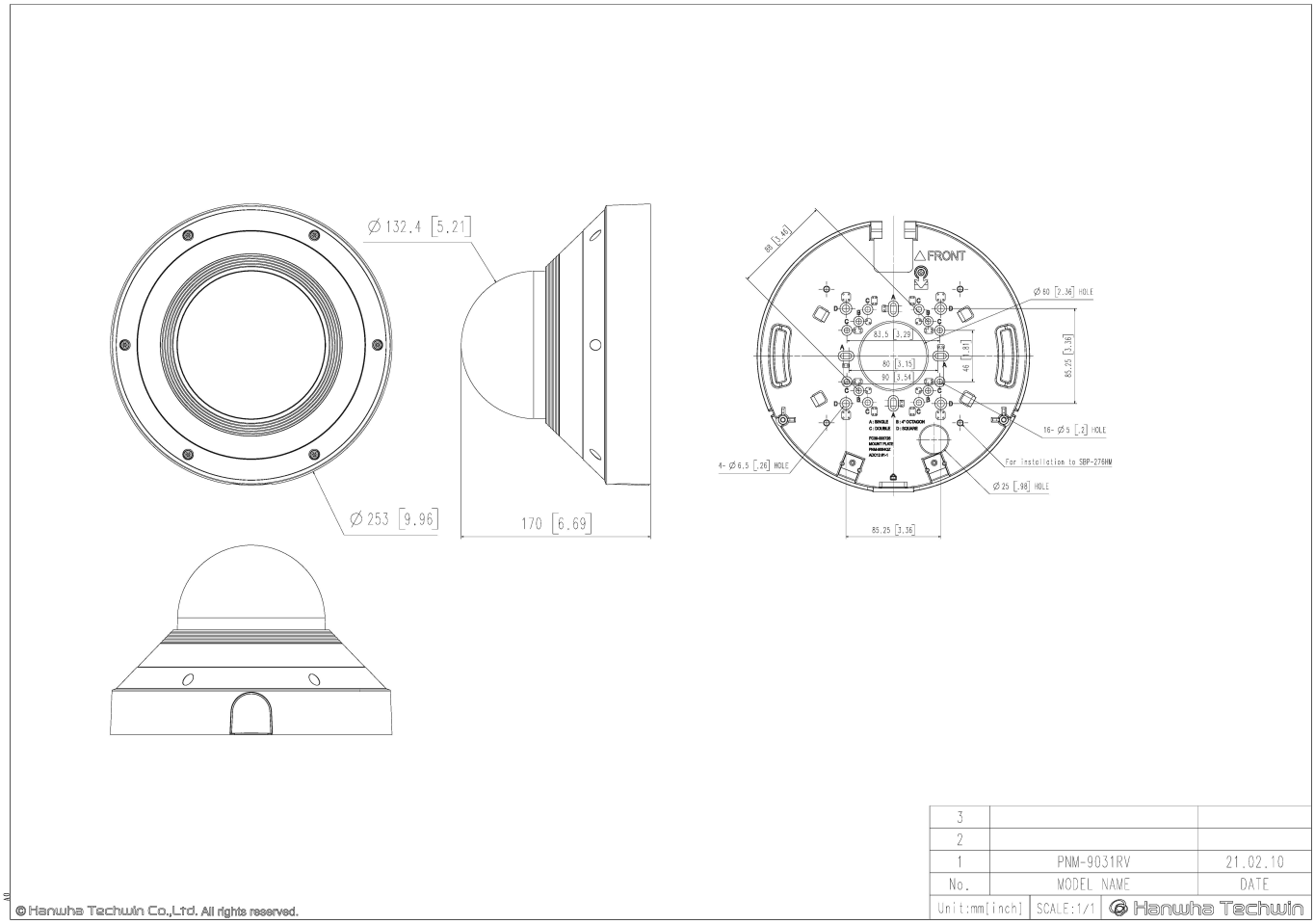

Design and specifications are subject to change without notice. The latest product information / specification can be found at HanwhaVision.com
Hanwha Vision is formerly known as Hanwha Techwin.

© Hanwha Vision CO., LTD. All rights reserved.