KINGSTON

TO ORDER PARTS, CALL: 1-877-252-7277
www.kingstonbrass.com

KB6690,1,2,3,5,6,7,8NDL

Single Handle Pressure Balanced Tub & Shower Faucet

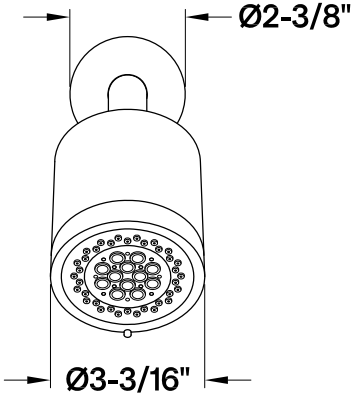

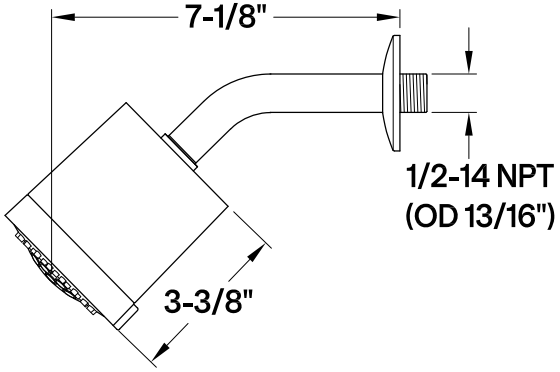

Bracket

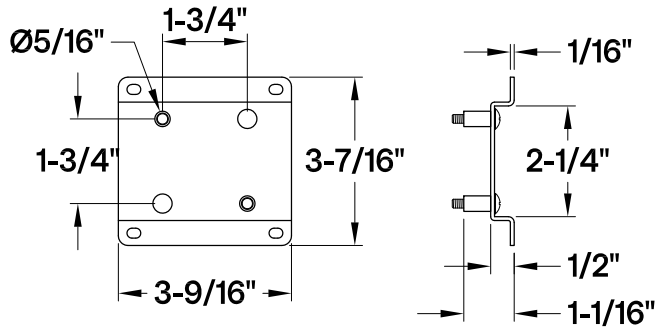

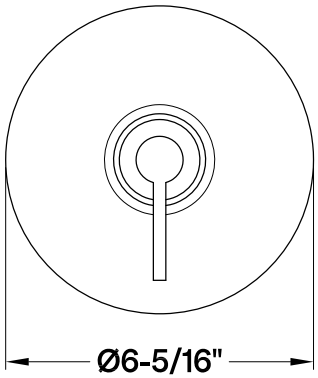

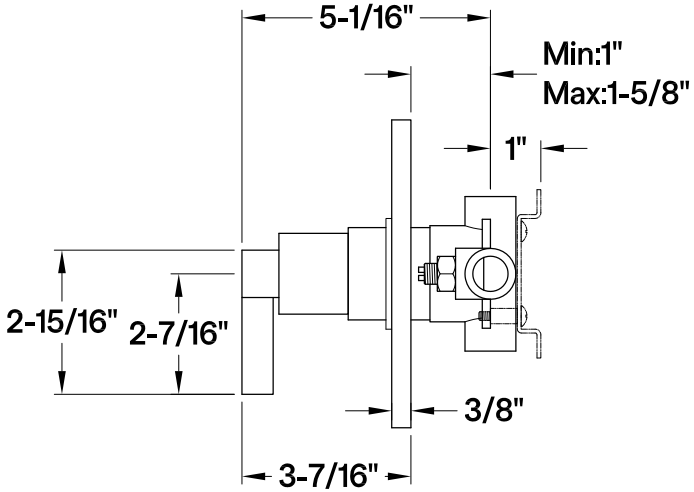

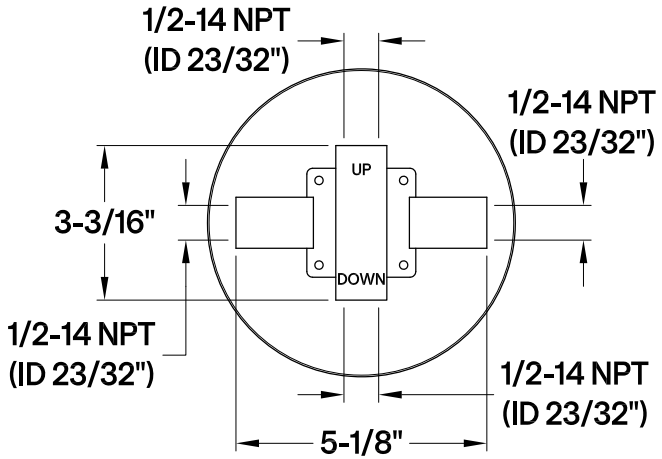

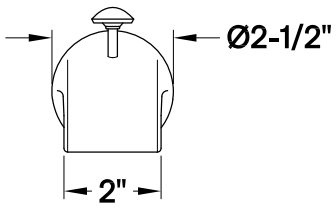

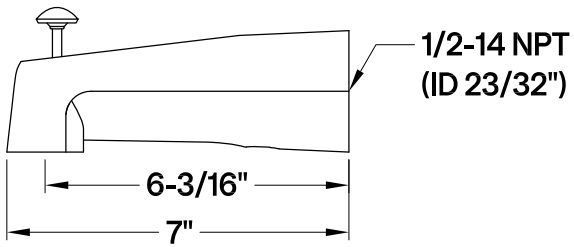

2025-11-B