Storage with Style Base Pullout Systems

Installation Instructions for SWS-BPO & SWS-DBPO Series

Scan to watch the installation video
https://delivr.com/2e3f7

IMPORTANT:

Before you begin, make sure you familiarize yourself with all the parts and fully read the instructions.

CUSTOMER SERVICE:

Toll-free customer help line available weekdays between 7:00am and 6:00pm Central Time at 800-463-0660.

TOOLS NECESSARY:

Screw gun or Phillips screwdriver and tape measure. NOTE: If screw gun has a clutch, set to lowest setting so as not to over tighten and/or strip screws.

PARTS IDENTIFICATION:

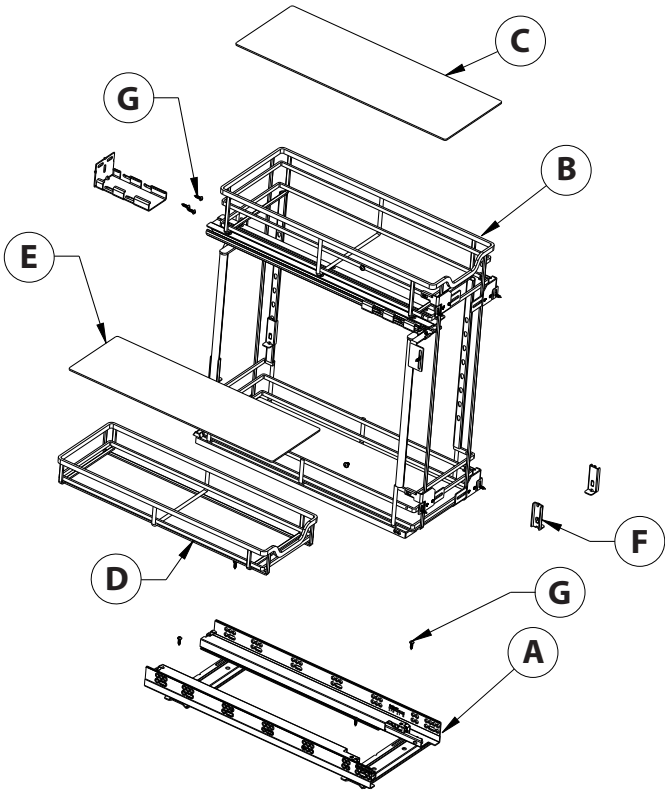

A	Undermount Slide Base Assembly	1 pcs
B	Organizer	1 pcs
C	Fixed Shelf Liner	2 pcs
D	Removeable Shelf Basket	1 pcs
E	Removeable Shelf Liner	1 pcs
F	Hooked L-Shape Support Bracket	4 pcs
G	#8 X 5/8" Pan Head Phillips Wood Screw	8 pcs
H	#8 X 5/8" Flat Head Phillips Wood Screw	4 pcs

STEP 1 - Prepare Organizer for Install

Remove the organizer from the slides by pressing inward on the slide release clip.

STEP 2 - Slide Base Installation

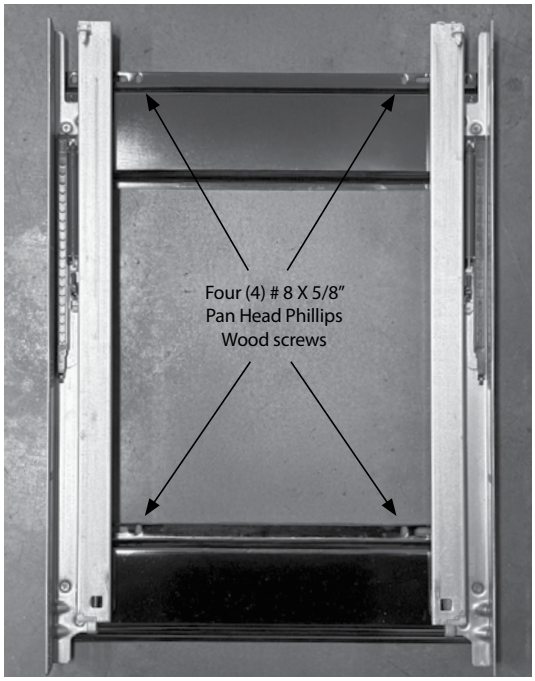

Place the slide base inside the cabinet, pulling the front cross member tight against the rear of the face frame. For frameless cabinets, set the front cross member back 3/4". For inset door applications, slide the base back from the above measurements plus the thickness of the door. Firmly secure with four (4) # 8 X 5/8" Pan Head Phillips Wood screws provided in the locations shown above.

STEP 3 - Mark Rear Mounting Bracket

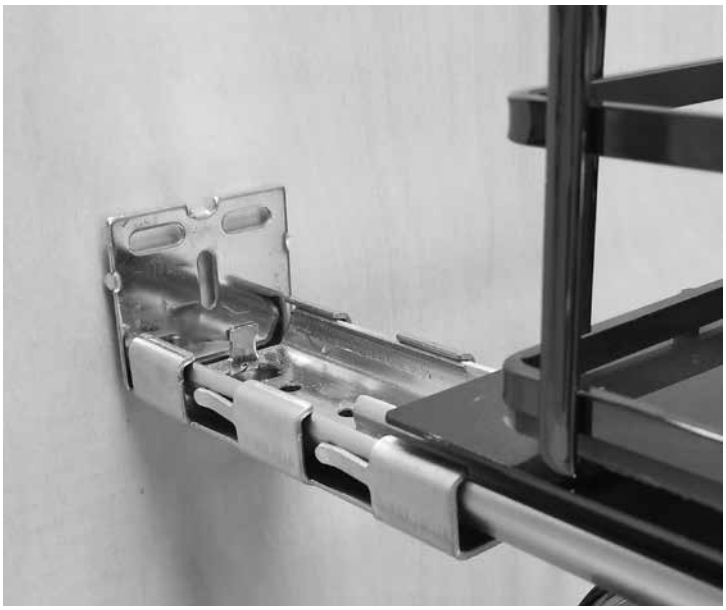

If the countertop is installed, pull the organizer partially open to gain access to the upper slide. Firmly grasping the upper slide, tap it against the back of the cabinet. The rear bracket should make small indentations in the back of the cabinet. Proceed to step 4. **If countertop is not installed**, pull the organizer partially out to gain access to the rear bracket and install three (3) #8 x 5/8" Pan Head Wood Screws provided in the slots. Proceed to step 5.

STEP 4 - Install Rear Mounting Bracket

Remove the unit from the base again and then slide the rear mounting bracket off the slide. Align the rear bracket prongs with the indentation marks on the rear of the cabinet and secure with three (3) #8 x 5/8" Pan Head Wood Screws in the slots as shown. Re-install the unit onto the slides, making sure as you push it in the cabinet, that the top slide is properly seated into the rear mounting bracket. Operate the unit to make sure the undermount slides are working properly.

STEP 5 - Install Front Mounting Bracket

Pull the top front mounting bracket into position on the side of the face frame (or cabinet) allowing for a 3/16" setback (shown left above). Firmly secure with one (1) #8 x 5/8" Pan Head Wood Screw. Make sure the gap between the unit and the side of the face frame is equal from top to bottom. Adjust accordingly and then securely tighten the bracket set screw (shown right above). Operate the unit and make adjustments as necessary for the slides to operate smoothly.

STEP 5 - Finishing Touches

Remove the packaging material from around the acrylic liners and place it in the bottom of the organizer unit. Install the middle shelf using the shelf supports provided and cycle the organizer making sure the soft-close slides are operating.

STEP 6 - Door Installation

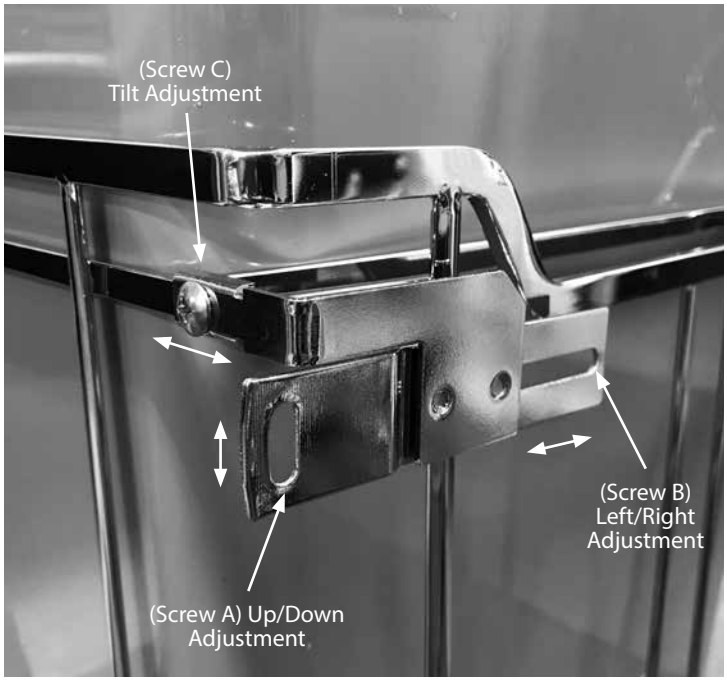

Using a tape measure, determine the mounting location of the top door mounting brackets. Install door with two (2) #8 X 5/8" Flat Head Phillips Wood Screws and make necessary adjustments following the diagram above. To adjust door up or down loosen door mounting screws (A). To adjust left or right, loosen both set screws (B) adjust and retighten. To adjust tilt, loosen tilt screw (C), adjust and retighten set screws. Once the door is in the desired position firmly secure the two bottom door mounting screws.