KOHLER®

Installation Guide

SKU#29382

PREPARATION

1. Record your model number for future reference.
2. **DANGER: Risk of electric shock.** To avoid electric shock, the power must be turned off at the circuit breaker or fuse box before beginning the installation procedure.
3. **DANGER: Risk of electric shock.** To avoid electric shock, the outlet box must be properly grounded.
4. **Important Information.** Inspect the product for any damage. This product is for indoor use only. Observe all local codes.

Please see next page for a larger installation image

TOOLS AND MATERIALS NEEDED

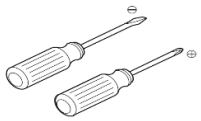

Phillips & Flathead Screwdriver

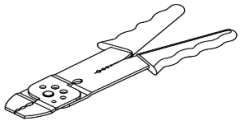

Wire Cutter/stripper

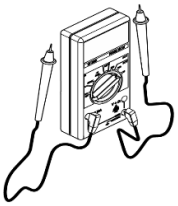

Electrical Current Tester

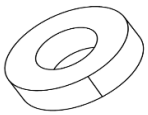

Electrical Tape

Allen Wrench

FIXTURE INSTALLATION

1. Remove the fixture and parts bag(s) from the carton. Put them onto a clean and soft cloth to protect finish. Confirm all parts are included.
2. Loosen screws (F) then remove mounting plate (B) from canopy (G).
3. Attached mounting plate (B) onto outlet box with screws (D). Mark all anchor holes position on the ceiling, then take off mounting plate (B). Drill anchor holes in Dia. 1/4” for concrete ceiling or Dia. 3/8” for dry wall ceiling.
4. Insert anchors (Q) or (R) into ceiling (R for concrete, Q for dry wall).
5. Adjust iron chain (K) length to desired height by removing excess links.
6. Install iron chain (K) onto down rods (L) and rings (H) with chain ends (I).
7. Thread wire (J) and ground wire through down rod (L), and lace wire (J) and ground wire through iron chain (K), ring (H), canopy (G), and mounting plate (B).
8. Trim excess cord to minimum 13” beyond canopy (G). Strip wire to 5/8” at the end, and twist.
9. Attached mounting plate (B) onto outlet box with screws (D). Ensure ground screw (C) is attached to mounting plate (B).
10. Install down rods (L) onto fixture. Lift the fixture then lace safety cord (E) around mounting plate (B), then secure safety cord (E) by feeding the cord back through the lock and tighten with set screw.
11. **NOTICE:** To avoid short circuit, make sure wires are not exposed. Fasten fixture green or bare ground wire to the green or bare copper wire in outlet box with wire nut (A) or fasten onto ground screw (C) on mounting plate.
12. **NOTICE:** To avoid short circuit, make sure wires are not exposed. Fasten fixture white wire to the white wire in outlet box with wire nut (A). Wrap the wire connector with electrical tape so that the tape seals the end of wire nut (A). See diagram 1.
13. **NOTICE:** To avoid short circuit, make sure wires are not exposed. Fasten the fixture black wire to the black wire in outlet box with wire nut (A). Wrap the wire connector with electrical tape so that the tape seals the end of wire nut (A). See diagram 1.
14. Tuck wires carefully inside outlet box. Attach the canopy (G) onto mounting plate (B) with screws (F).
15. Install glass shade (M) or (M1) onto metal frame (N) then tighten screw (O) by Allen wrench. **Only tighten the screw until glass is secure. Over tightening may cause the glass to break.**
16. **NOTICE:** Do not exceed recommended wattage. Rated **Max 60 W, Type B.** (Bulb(s) not included).
17. Install bulbs to the sockets.
18. Repeat steps 15-17 for all glass shades.
19. Restore power to circuit at breaker or fuse box.

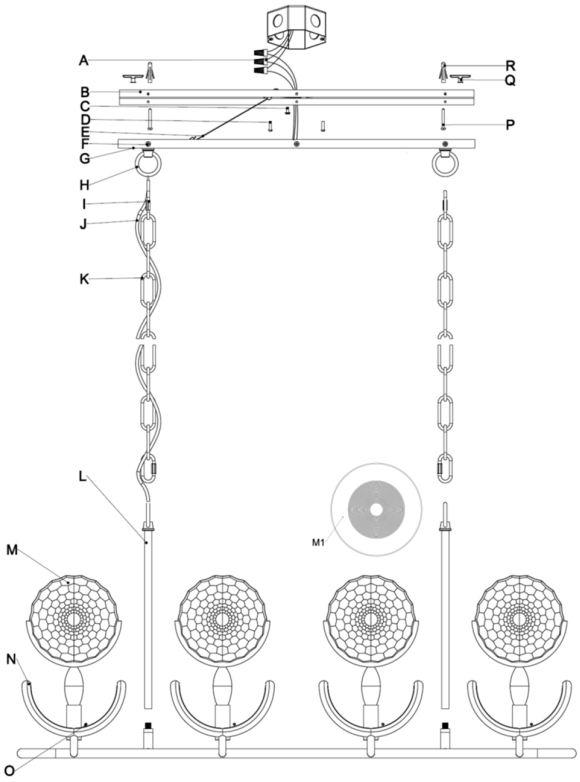

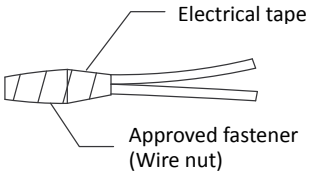

Diagram 1

CLEANING: Please clean fixture with a soft and dry cloth only. Clean glass with a mild soap.

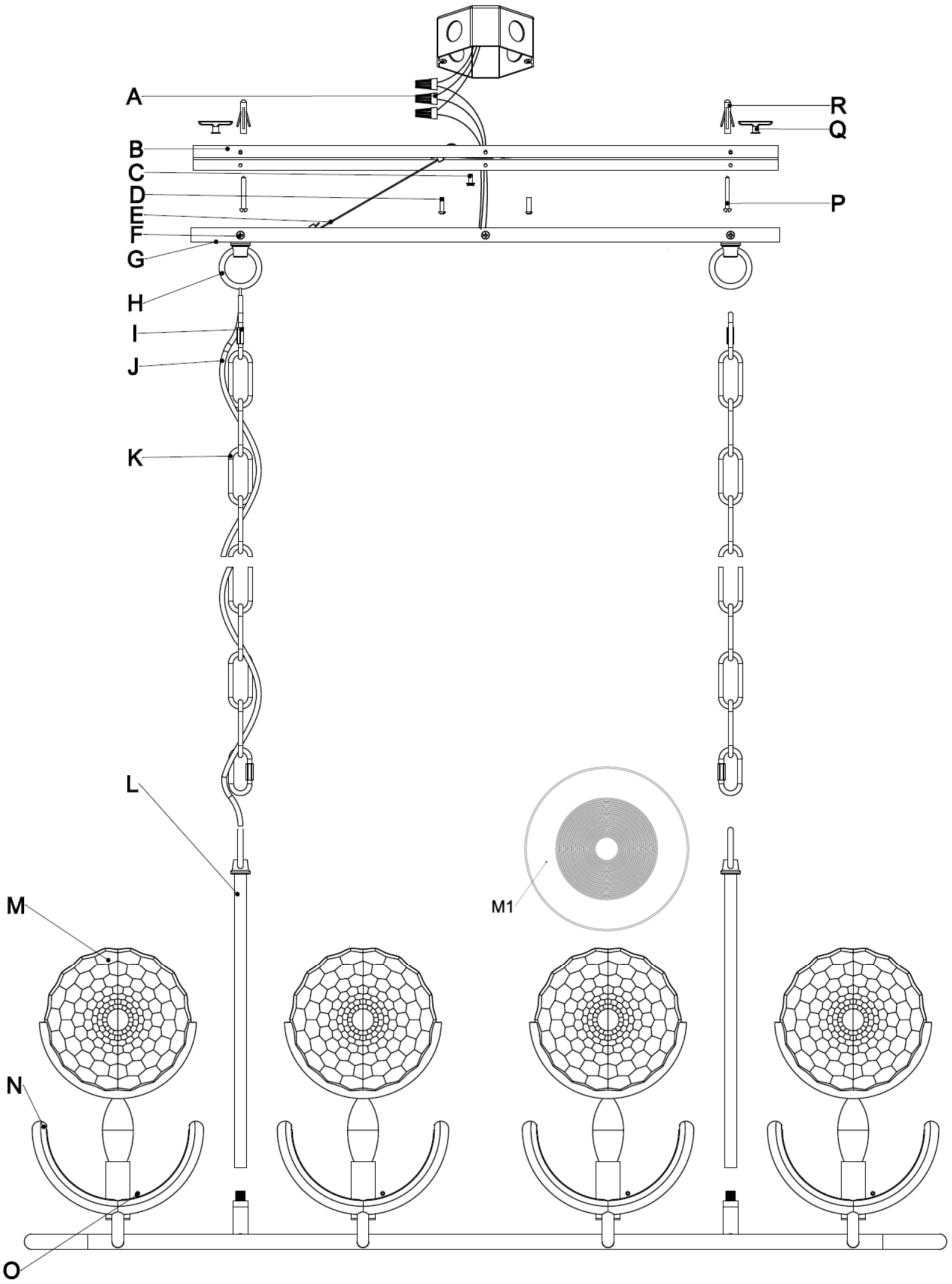
A
B
C
D
E
F
G
H
I
J
K
L
M
N
O
R
Q
P
M1