SYMMONS® Euro-Flo™

H325-V, H305-V
Hand Shower
Specification Submittal

Location:

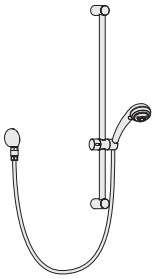

H325-V

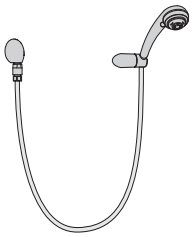

H305-V

Model Numbers

☐	**H325-V**	Hand shower, SC-127 with 30 inch vertical bar, wall connection and flange
☐	**H305-V**	Hand shower, SC-127 with wall mounted cradle, wall connection and flange

Feature Highlights

- Euro-Flo™ five function hand shower with full shower pulsating message and soft shower water saving spray head
- 5 foot flexible metal hose with in-line vacuum breaker
- Hand shower flow rate 2.0 gpm (7.6 L/min)
- 30 inch (762 mm) vertical bar with adjustable slide (model H325-V only)
- Polished Chrome finish (standard)

Options/Modifications

☐	**1.5** CG	**1.5 gpm (5.7 L/min) flow restrictor**
☐	**STN**	**Satin Nickel finish**

Note: Append appropriate -suffix to model number.

Compliance

- ASME A112.18.1/CSA B125.1

C US

Warranty

Limited Lifetime - for residential installations.
10 Years - for commercial/industrial installations.
Refer to www.symmons.com/warranty for complete warranty information.

Architectural/Engineering Specification

Symmons Euro-Flo Hand Shower _____ Features includes Euro-Flo five function hand shower with full shower pulsating message and soft shower water saving spray head, 5 foot flexible metal hose with in-line vacuum breaker, hand shower flow rate 2.0 gpm (7.6 L/min), 30 inch (762 mm) vertical bar with adjustable slide (model H325-V only), Polished Chrome finish (standard). 10-Year Commercial Warranty. ASME A112.18.1/CSA B125.1 compliant. Available options: "1.5 - 1.5 gpm (5.7 L/min) flow restrictor", "STN - Satin Nickel finish".

Symmons Industries, Inc. ▪ 31 Brooks Drive ▪ Braintree, MA 02184 ▪ Phone: (800) 796-6667 ▪ Fax: (800) 961-9621
Copyright © 2026 Symmons Industries, Inc. ▪ symmons.com ▪ gethelp@symmons.com ▪ ZV-3538 REV B ▪ 090326

SYMMONS® Euro-Flo™

H325-V, H305-V

Dimensions

Hand Shower, H325-V

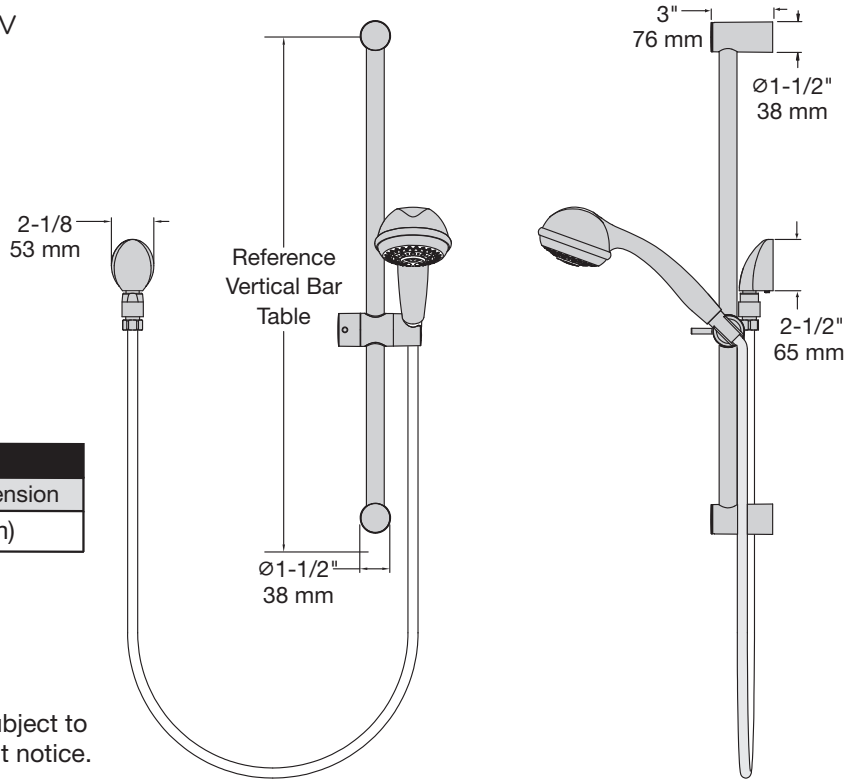

Vertical Bar	
Length	Drawing Dimension
30"	30" (762 mm)

Note: Dimensions subject to change without notice.

Hand Shower, H305-V

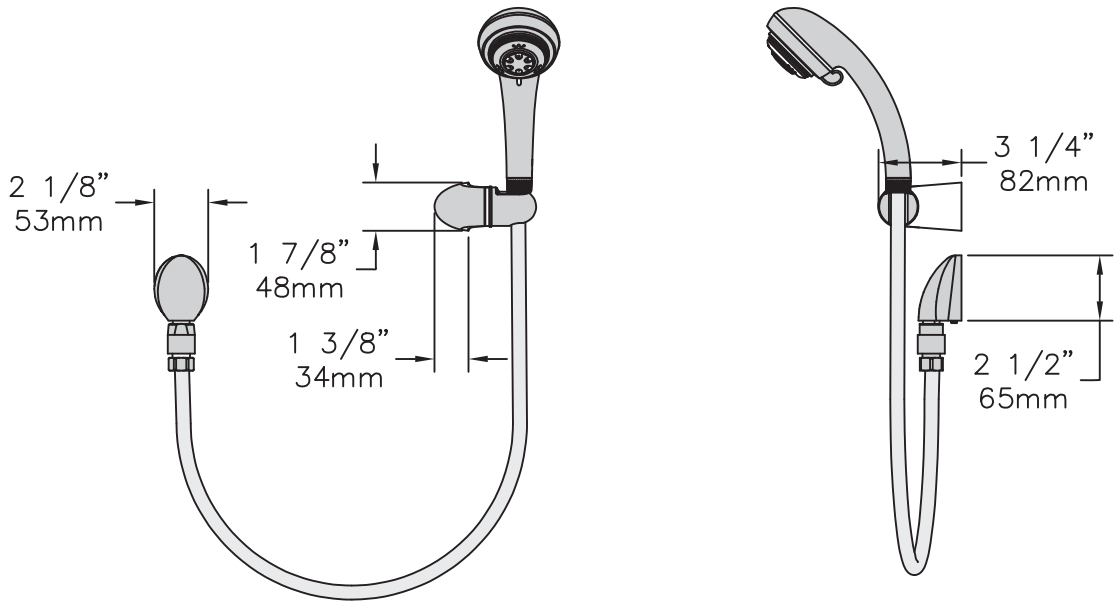

Note: Dimensions subject to change without notice.

Symmons Industries, Inc. ▪ 31 Brooks Drive ▪ Braintree, MA 02184 ▪ Phone: (800) 796-6667 ▪ Fax: (800) 961-9621
Copyright © 2026 Symmons Industries, Inc. ▪ symmons.com ▪ gethelp@symmons.com ▪ ZV-3538 REV B ▪ 090326