REVISIONS					
REV.	ZONE	DESCRIPTION	DATE	NAME	ECO
1		INITIAL RELEAASE	22-OCT-24	AB	

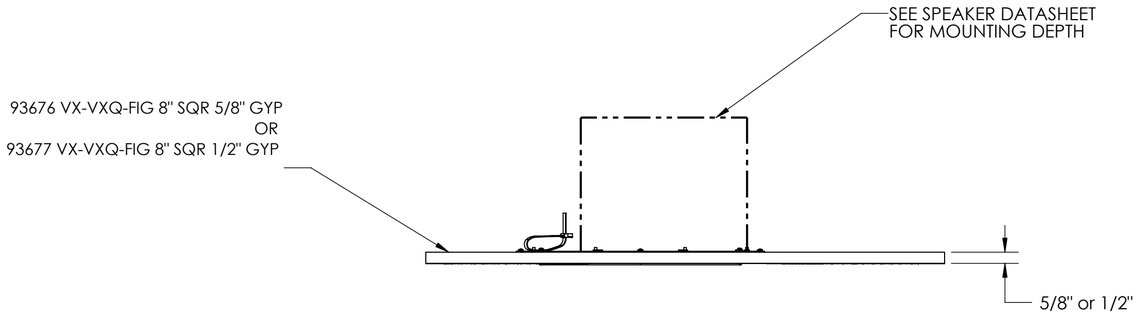

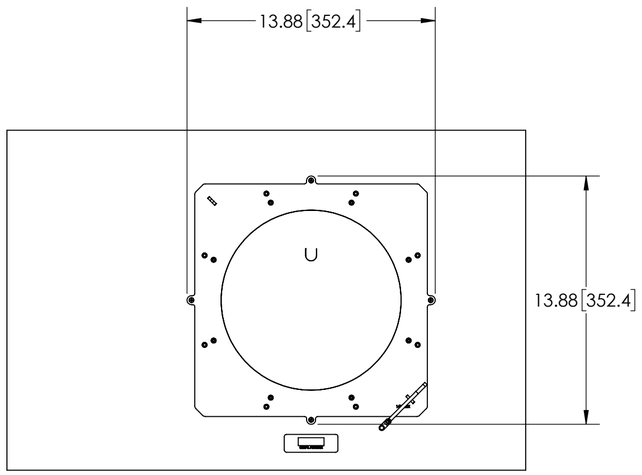

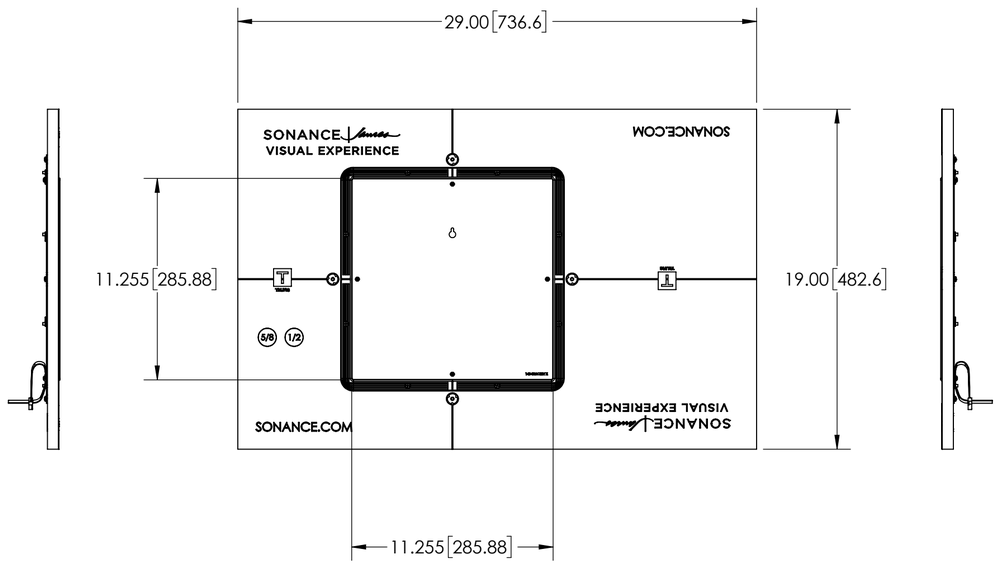

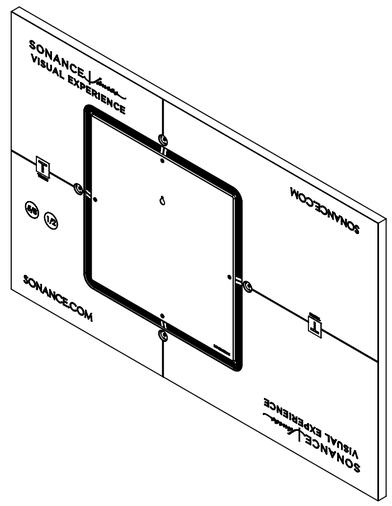

TRUFIG GYP MOUNTING PLATFORM VX-VXQ 8 INCH SQR

REV. 1

DRAWN - PART NUMBER C

DRAWN BY:AB

RELEASED ON: 22 OCT 24

SCALE: 1:6

SHEET 1 OF 1

TRUFIG
991 CALLE AMANECER, SAN CLEMENTE CA. 92673
WWW.TRUFIG.COM

FILE NAME: TRUFIG GYP MOUNTING PLATFORM VX-VXQ 8 INCH SQR