DoorBird
Technology meets Design.

D21DKV surface mounting housing (backbox)

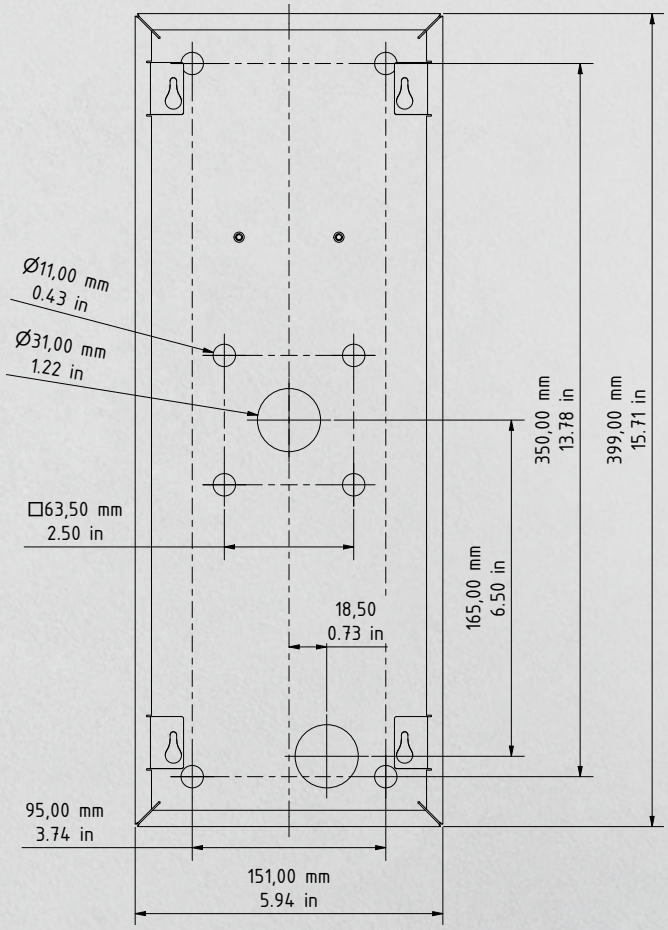

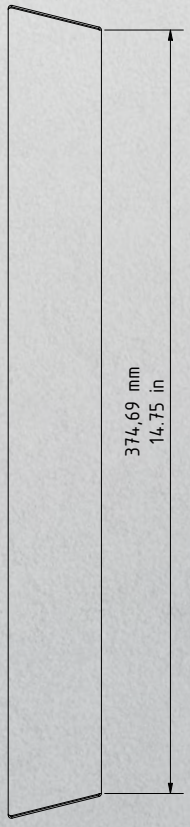

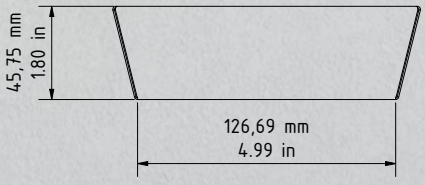

Errors and omissions excepted. | Last update 10/2024 - Copyright © ASSA ABLOY – www.doorbird.com