KINGSTON

TO ORDER PARTS, CALL: 1-877-252-7277
www.kingstonbrass.com

KVPB1917M34

19" x 17" Carrara Marble Vanity Top with Oval Sink

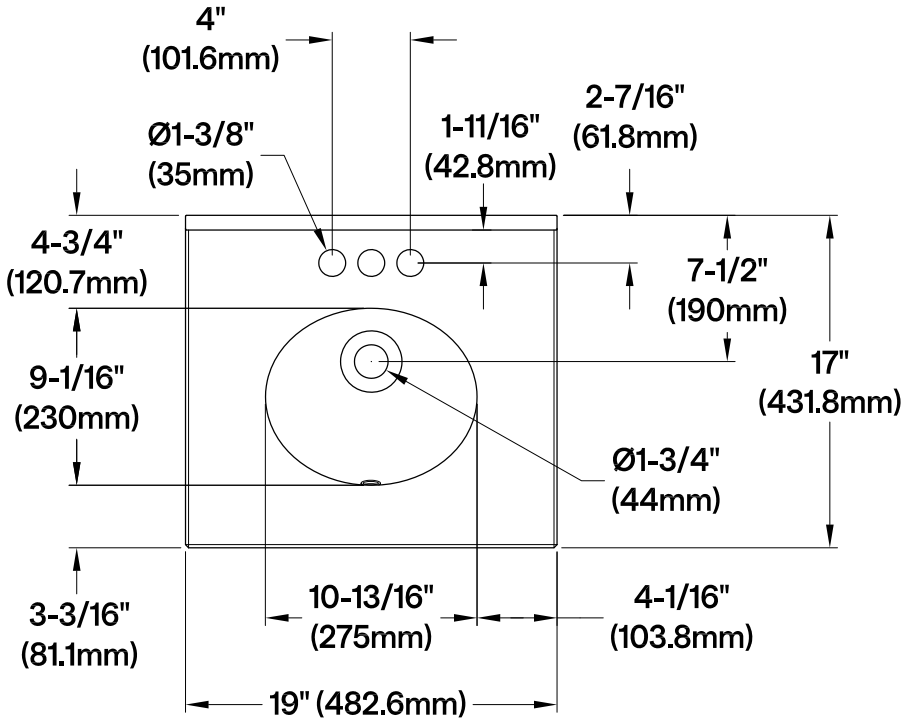

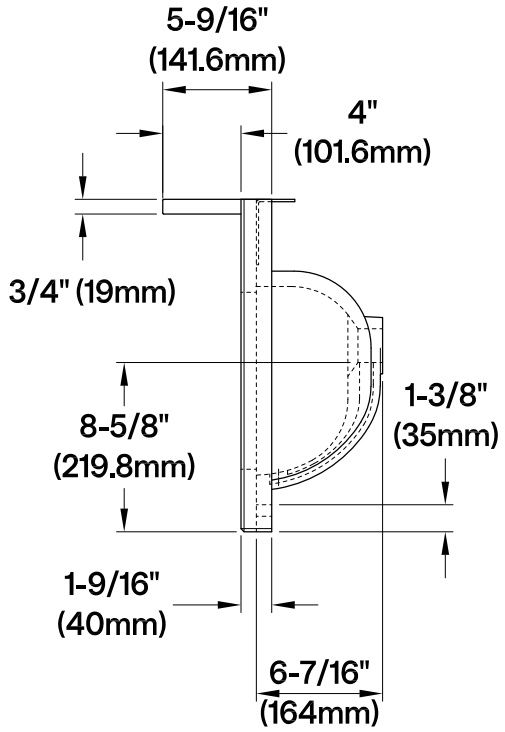

Drain Hole Size
(Scale 2:1)

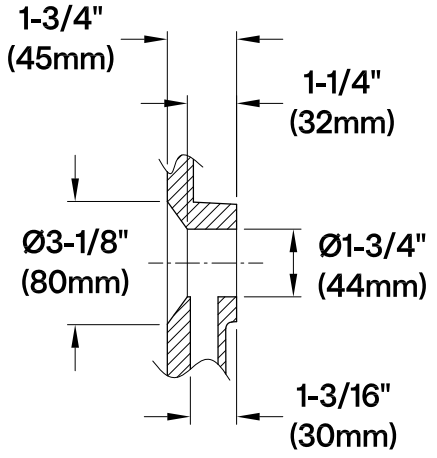

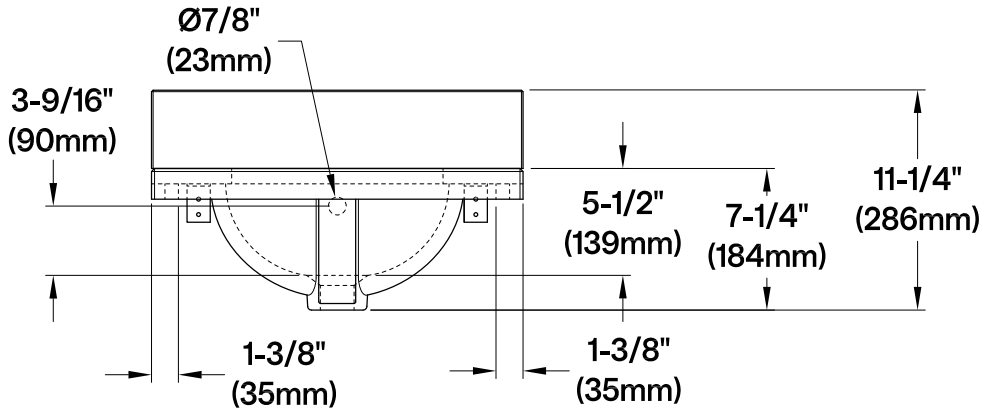

Bracket (2 pcs)
(Scale 2:1)

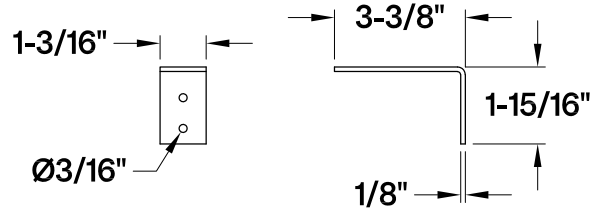

2026-04-A