EVA DRESSING TABLE & STOOL ASSEMBLY INSTRUCTIONS

Thank you for purchasing the EVA DRESSING TABLE & STOOL. Please read the instructions carefully to ensure safe operation of the product.

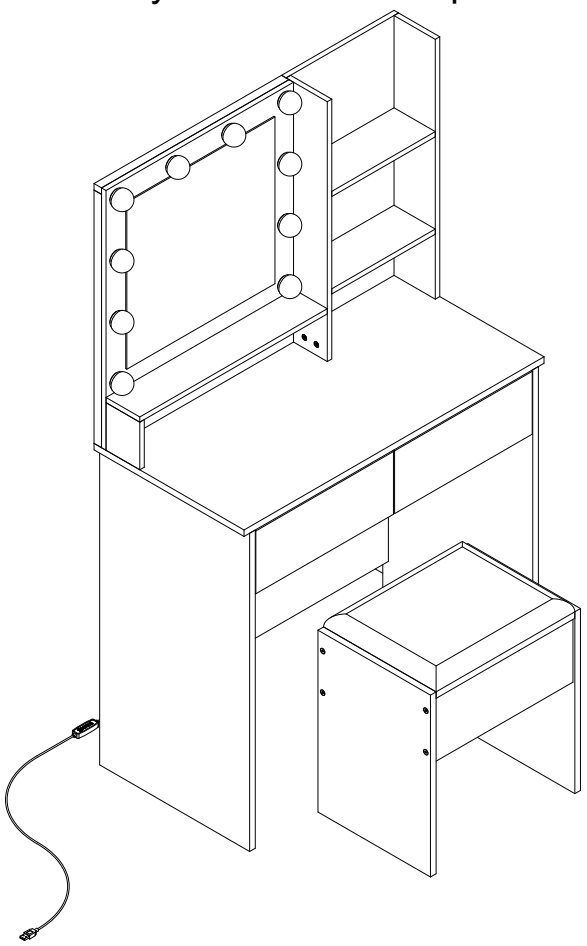

Dressing table:L80xW40xH135cm

Stool: L40xW30xH45cm

PLEASE READ this sheet prior to assembly to familiarise yourself with the various stages of construction.

Carefully open the pack supplied and check the contents against the parts and fittings check list. Do not destroy any of the packaging until you are certain that you have all the necessary parts for the assembly.

CAUTION: There are small components used in the construction of this unit. These loose items should be kept away from young children whilst assembling your unit to avoid the danger of choking hazards.

Tools Required

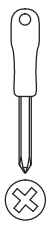



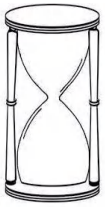

1 Hour Set Up

IMPORTANT - READ CAREFULLY - RETAIN THESE INSTRUCTIONS FOR FUTURE REFERENCE.

INFORMATION

Due to the size of this product we recommend that it is assembled in the room intended for use.
When you are ready to start, make sure that you have the right tools, plenty of space and a clean, dry area for assembly.
Unwrap all packaging materials and place the components on top of the carton box or on a clean floor to prevent it from scratching.
Check the pack and make sure you have all the parts listed.
Ensure that this product is fully assembled as illustrated before use.
Check all screws or bolts are tightened and inspect regularly
This product should only be used on firm, level ground.
Keep small parts out of reach of children.
Make sure the legs remain in contact with the ground.
Tools not included.

WARNINGS

DO NOT use power tools to construct this product.
DO NOT use this product if parts are missing, damaged or worn.
DO NOT stand on the product.
DO NOT place very hot or very cold items on the surface unless adequately thick tablemats are used to prevent such items damaging your dresser top.
If a glass component is chipped or broken, stop using the product and consult the manufacturer or supplier
We recommend the use of the wall strap provided for safety reasons. If in doubt please consult a qualified tradesperson.
Always ensure the area to be drilled is free from hidden electrical wires, water and gas pipes.

CARE INFORMATION

Never use scourers, abrasives or chemical cleaners.
To clean wipe with a sponge and warm soapy water. Do not use solvent based cleaners or detergents as they can bleach or damage the product.
When cleaning glass panels or mirrors use a damp cloth with washing up liquid or soft soap if necessary;
Do not use washing powders or any other substances containing abrasives, as these may scratch the glass

EVA DRESSING TABLE & STOOL ASSEMBLY INSTRUCTIONS

PART LIST

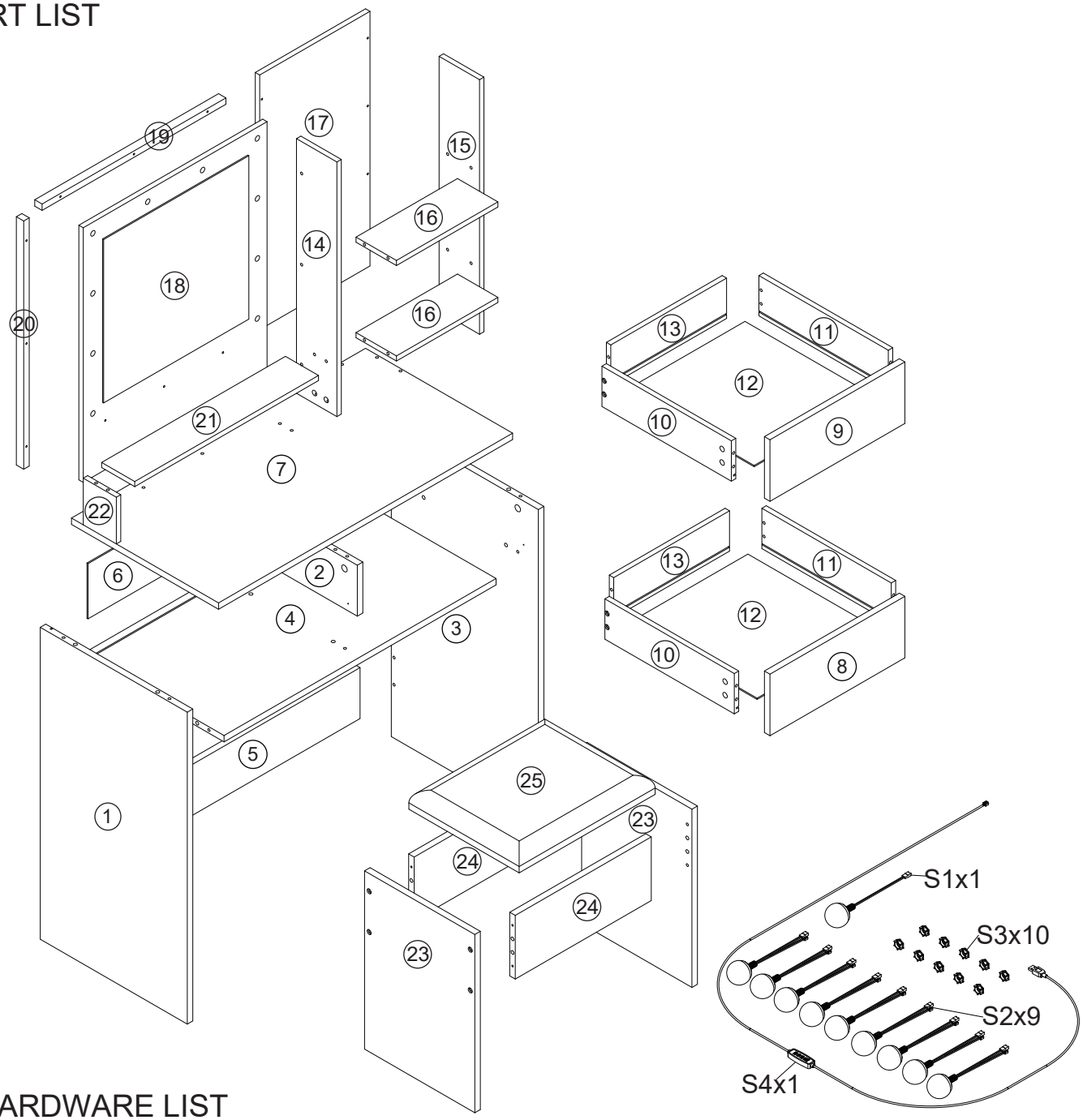

HARDWARE LIST

Ax43 Screw M5x40mm	Bx14 Cam M15x11mm	Cx29 Cam M12x10mm	Dx2 Slide	Ex2 Slide	Fx2 Slide
Gx2 Slide	Hx20 Dowel M8x30mm	Ix4 Bracket	Jx25 Screw M3x12mm	Kx14 Screw M7x50mm	Lx1 Allen key
Mx26 Screw M4x30mm	Nx6 Back clip	Ox6 Screw M3x14mm	Px2 Washer	Qx1 Strip	Rx1 Wall plug

EVA DRESSING TABLE & STOOL ASSEMBLY INSTRUCTIONS

PART LIST

① x1 Carton No:1/2 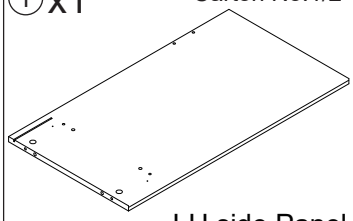 LH side Panel	② x1 Carton No:1/2 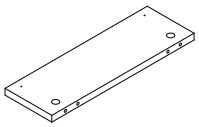 Centre divider Panel	③ x1 Carton No:1/2 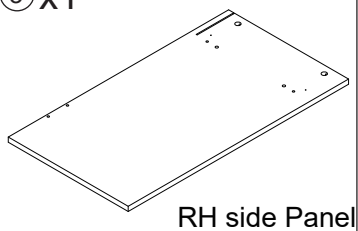 RH side Panel	④ x1 Carton No:1/2 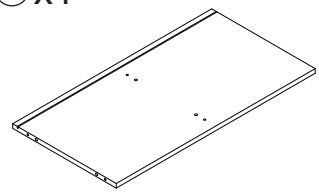 Middle Panel
⑤ x1 Carton No:1/2 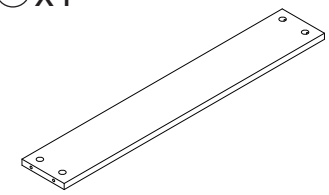 Cross bar	⑥ x1 Carton No:1/2 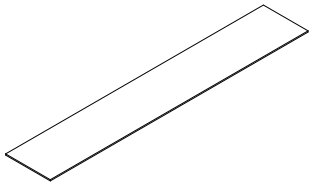 Back panel	⑦ x1 Carton No:1/2 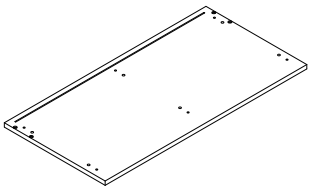 Top panel	⑧ x1 Carton No:1/2 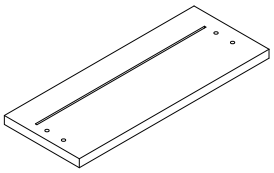 LH Front drawer panel
⑨ x1 Carton No:1/2 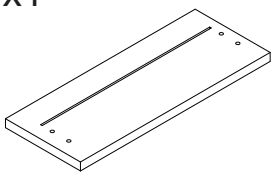 RH Front drawer panel	⑩ x2 Carton No:1/2 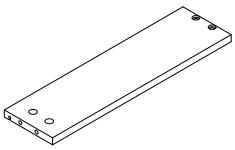 LH drawer side panel	⑪ x2 Carton No:1/2 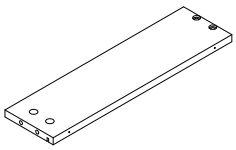 RH drawer side panel	⑫ x2 Carton No:1/2 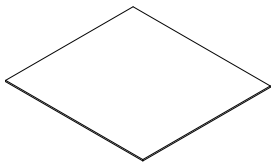 Drawer base
⑬ x2 Carton No:1/2 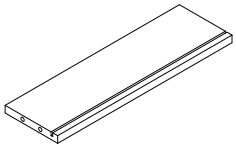 Drawer back	⑭ x1 Carton No:2/2 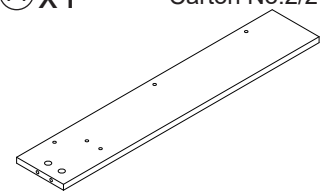 LH shelf vertical panel	⑮ x1 Carton No:2/2 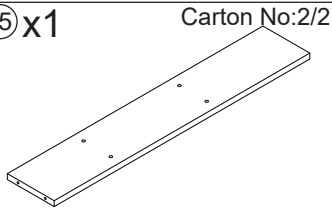 RH shelf vertical panel	⑯ x2 Carton No:2/2 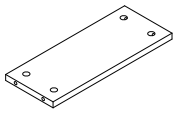 Short Shelf panel
⑰ x1 Carton No:2/2 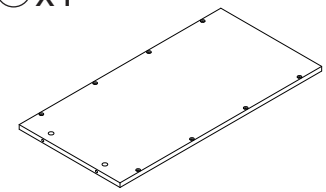 Shelf back	⑱ x1 Carton No:2/2 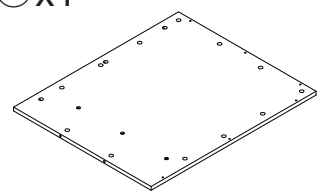 Mirror frame	⑲ x1 Carton No:2/2 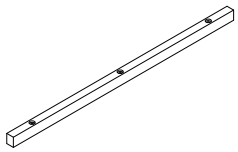 Mirror Support rail	⑳ x1 Carton No:2/2 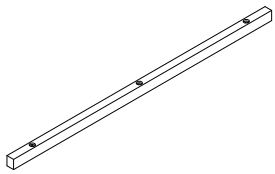 Mirror Support rail
㉑ x1 Carton No:2/2 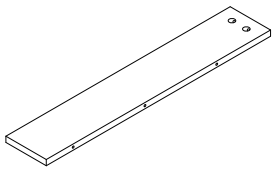 Long Shelf panel	㉒ x1 Carton No:2/2 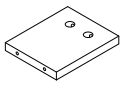 LH Vertical panel	㉓ x2 Carton No:2/2 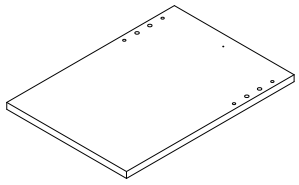 Stool side panel	㉔ x2 Carton No:2/2 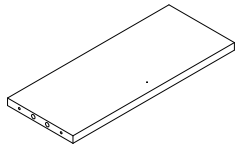 Stool support panel
㉕ x1 Carton No:2/2 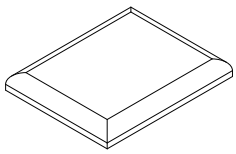 Cushion	Sx1 Carton No:2/2 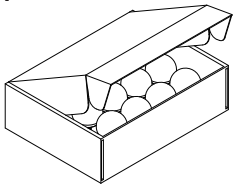 Mirror lights		

Instructions For Fastening CAM-BOLT AND CAM-LOCK

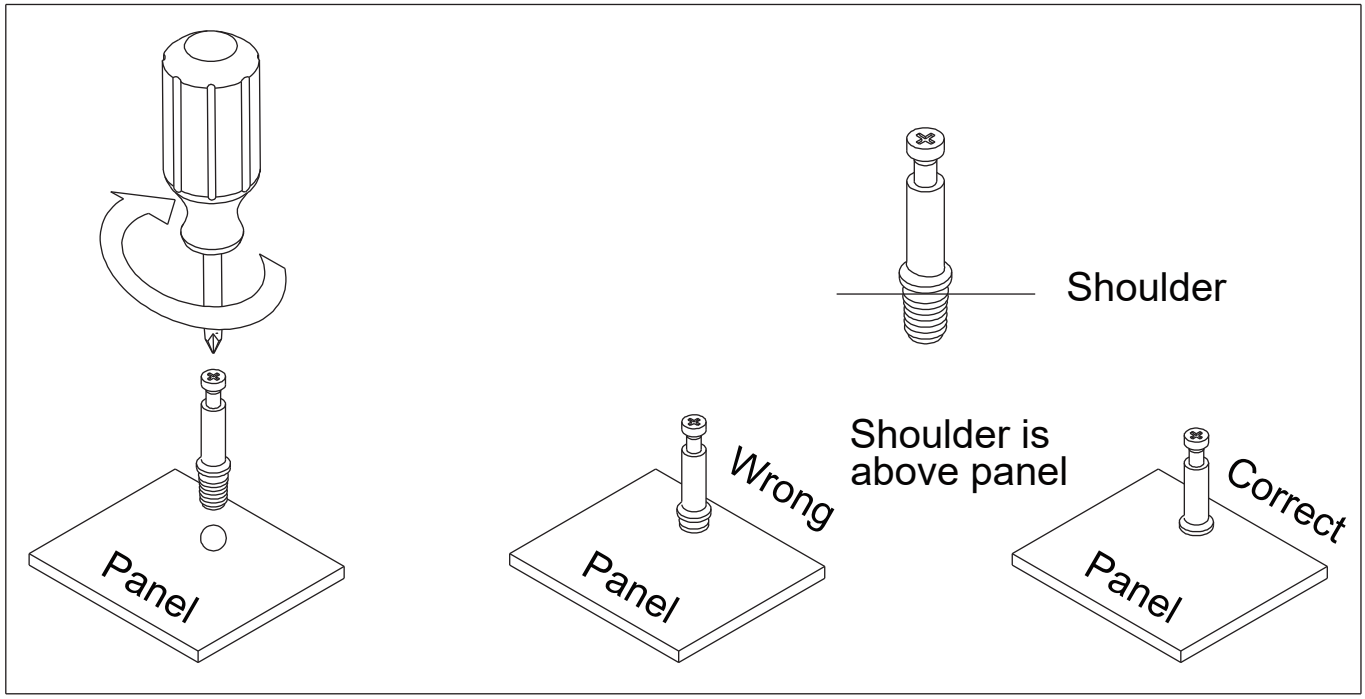

Attach the Cam-bolt to the specific pre-drilled holes on the panel. Use a Phillips Screwdriver to tighten Cam-bolt vertically until shoulder is flushed (on the same level) with panel. Do not over-tighten or under-tighten.

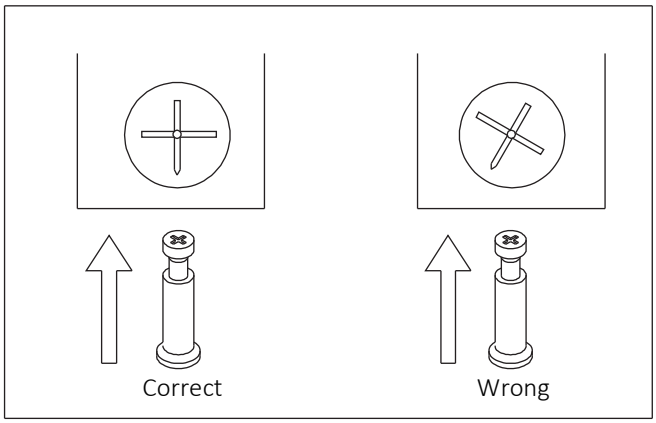

Align the arrow of the Cam-lock to the Cam-bolt head and insert the Cam-lock.

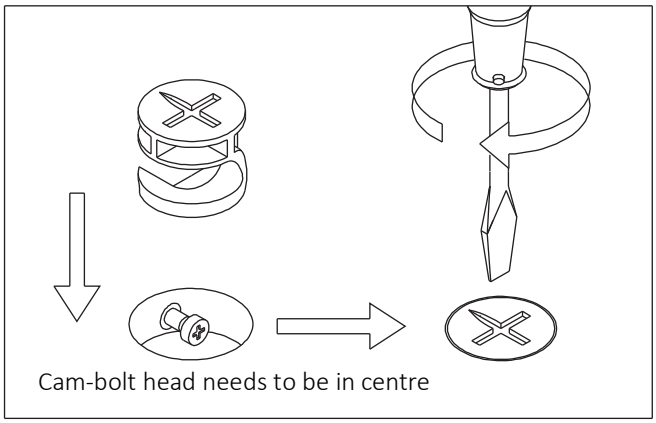

Use a Flat Screwdriver or Phillips Screwdriver to turn the Cam-lock clockwise one half a turn so it locks onto the head of the Cam-lock. Turn only until it is snug. Over-tightening could damage Cam-lock or/and Cam-bolt.

EVA DRESSING TABLE & STOOL ASSEMBLY INSTRUCTIONS

STEP 1

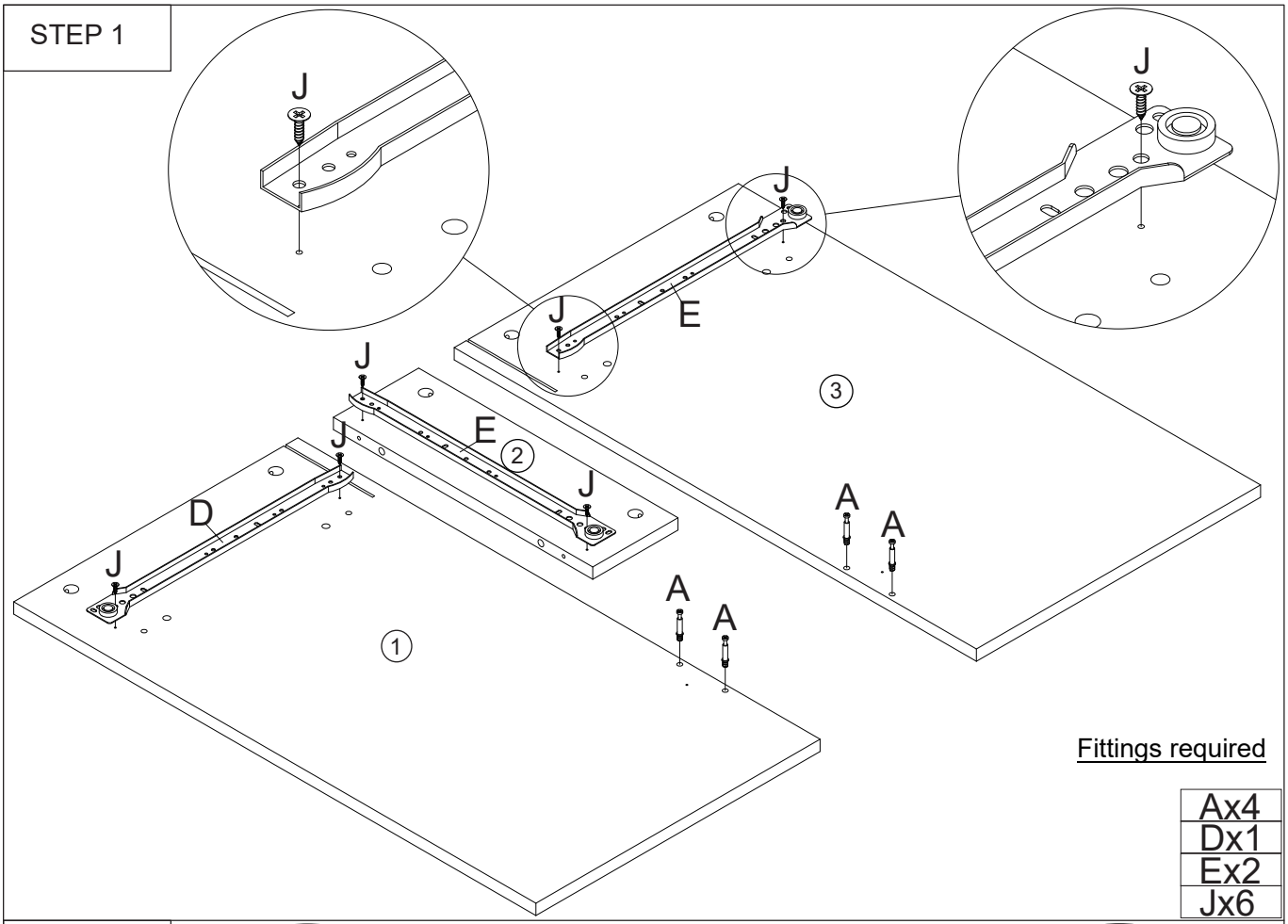

Fittings required

Ax4
Dx1
Ex2
Jx6

STEP 2

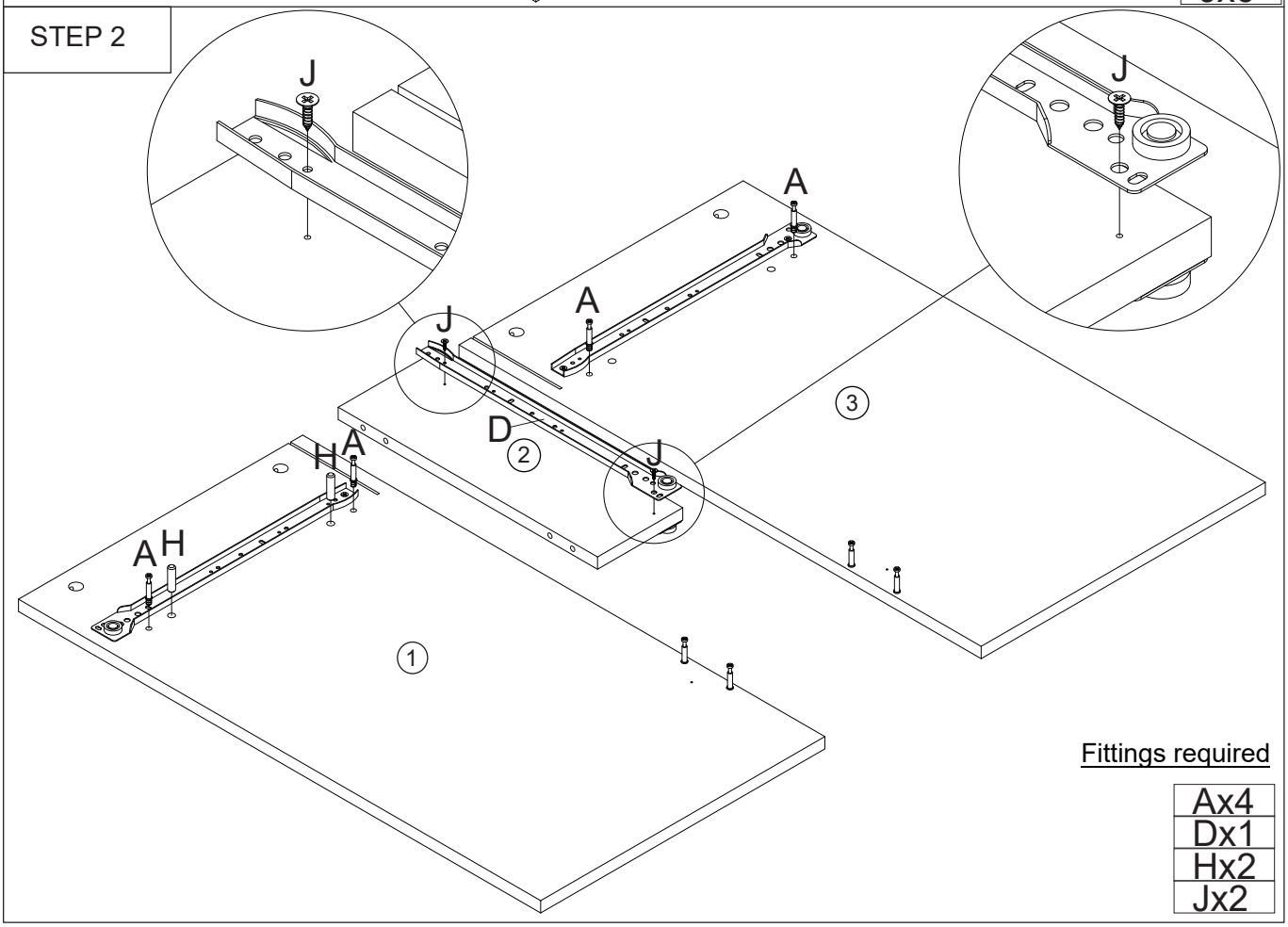

Fittings required

Ax4
Dx1
Hx2
Jx2

EVA DRESSING TABLE & STOOL ASSEMBLY INSTRUCTIONS

STEP 3

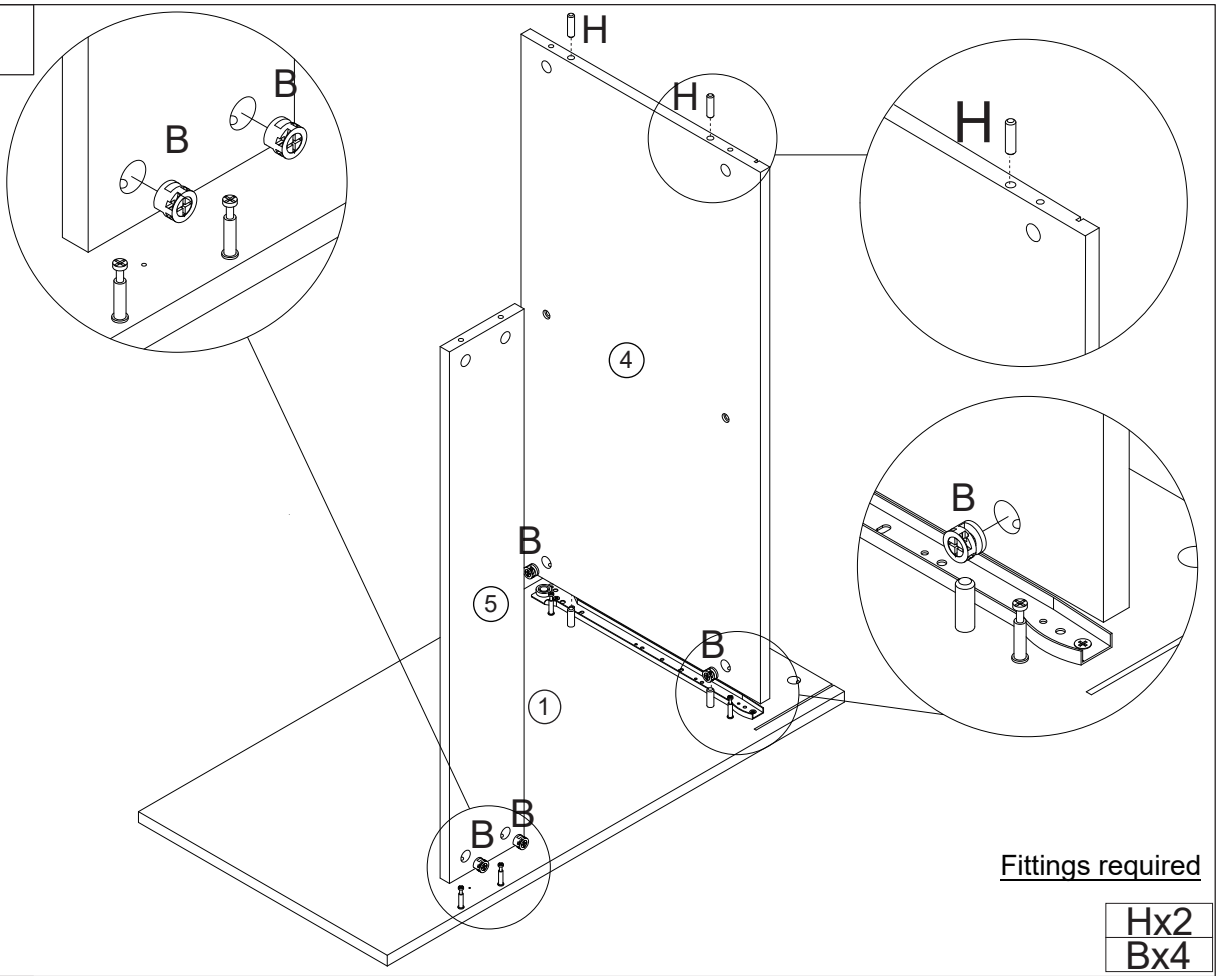

Fittings required

Hx2
Bx4

STEP 4

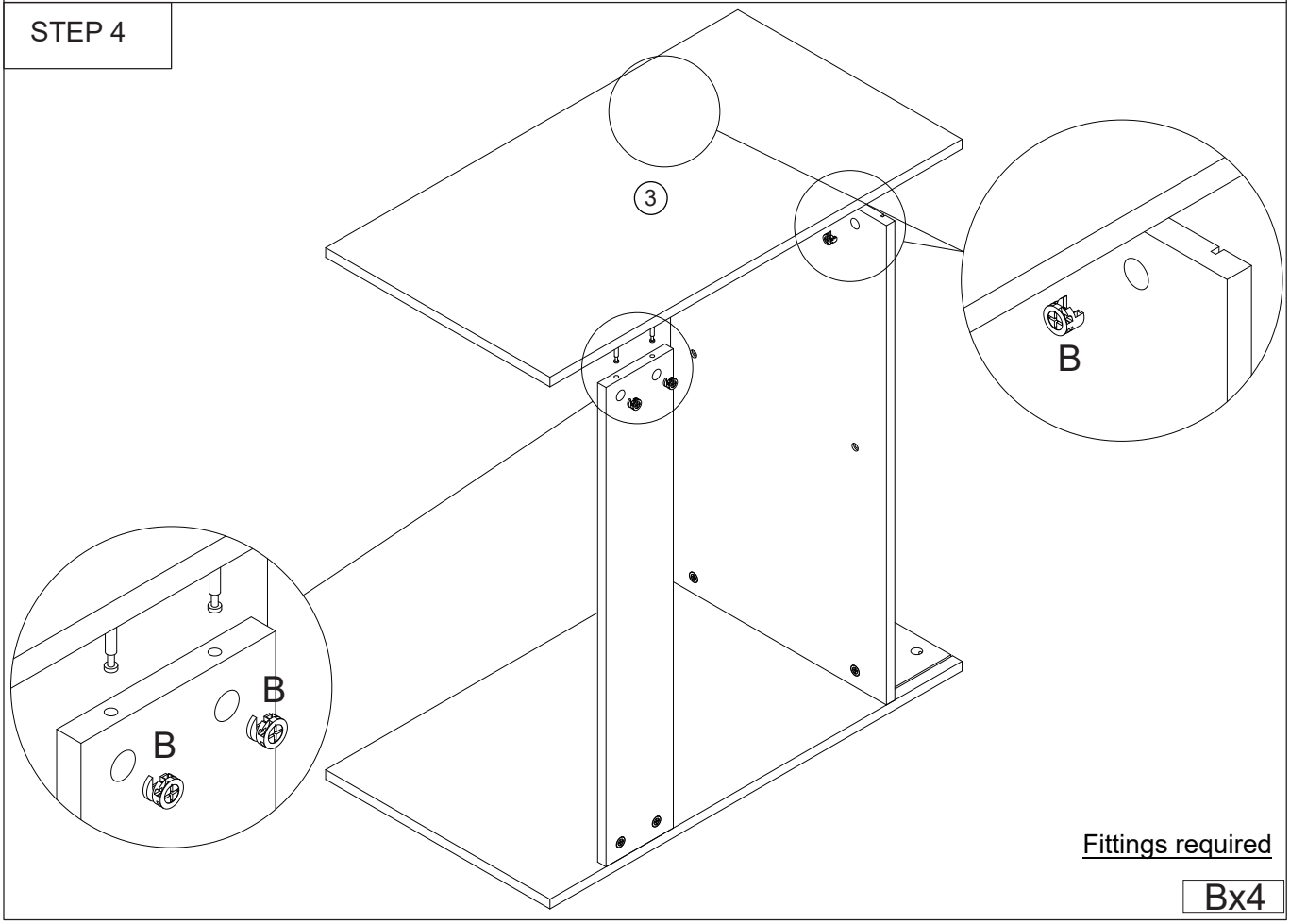

Fittings required

Bx4

EVA DRESSING TABLE & STOOL ASSEMBLY INSTRUCTIONS

STEP 5

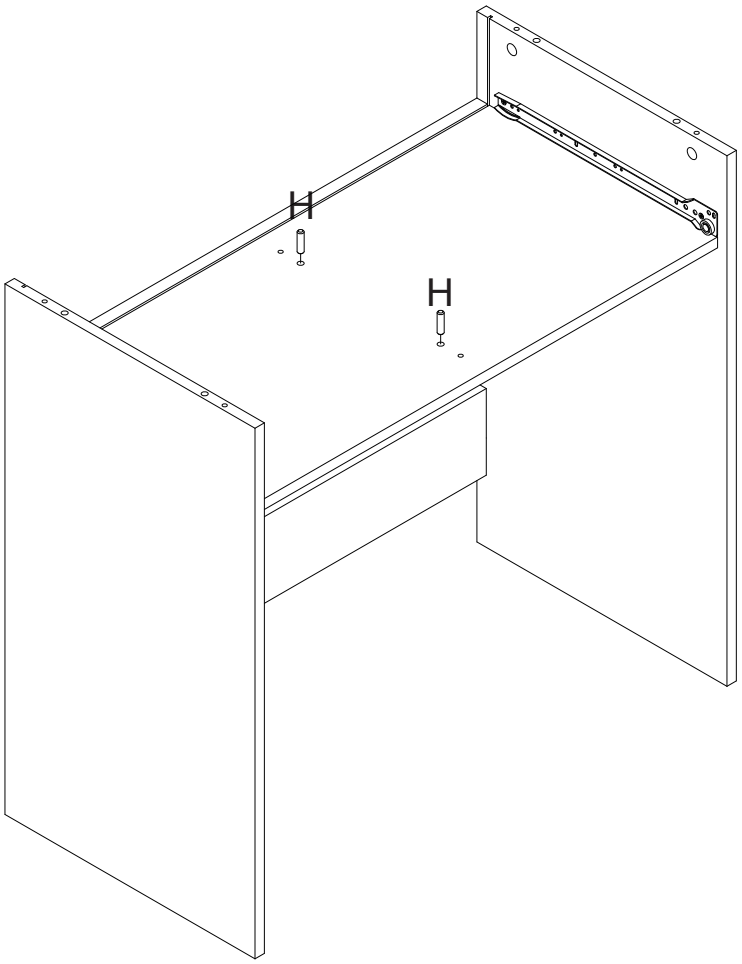

Fittings required

Hx2

STEP 6

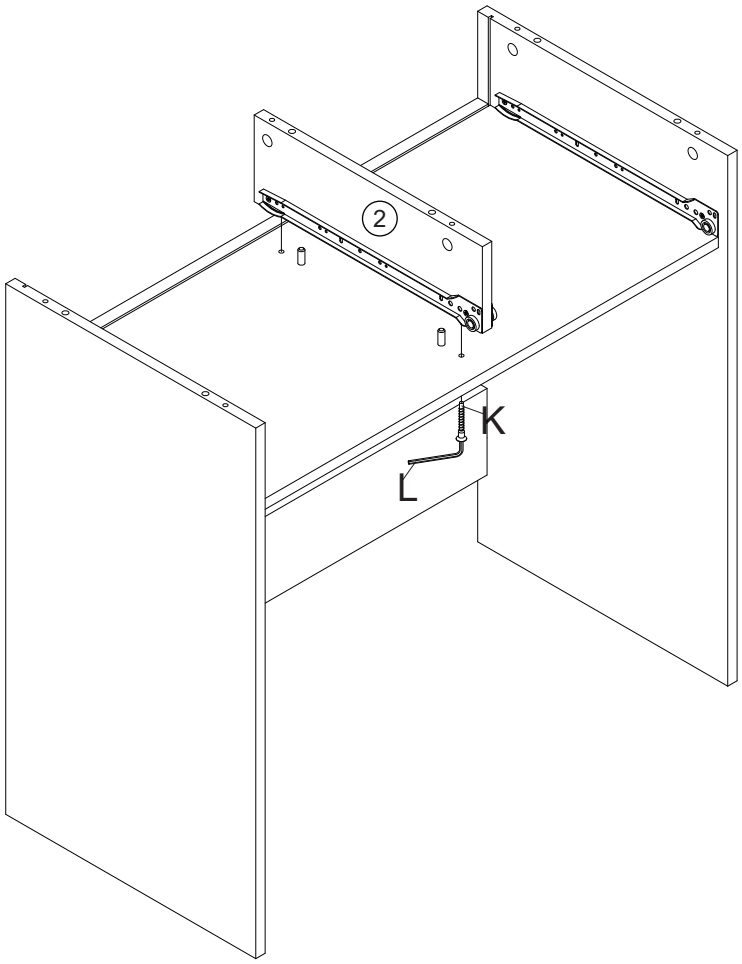

Fittings required

Kx2
Lx1

EVA DRESSING TABLE & STOOL ASSEMBLY INSTRUCTIONS

STEP 7

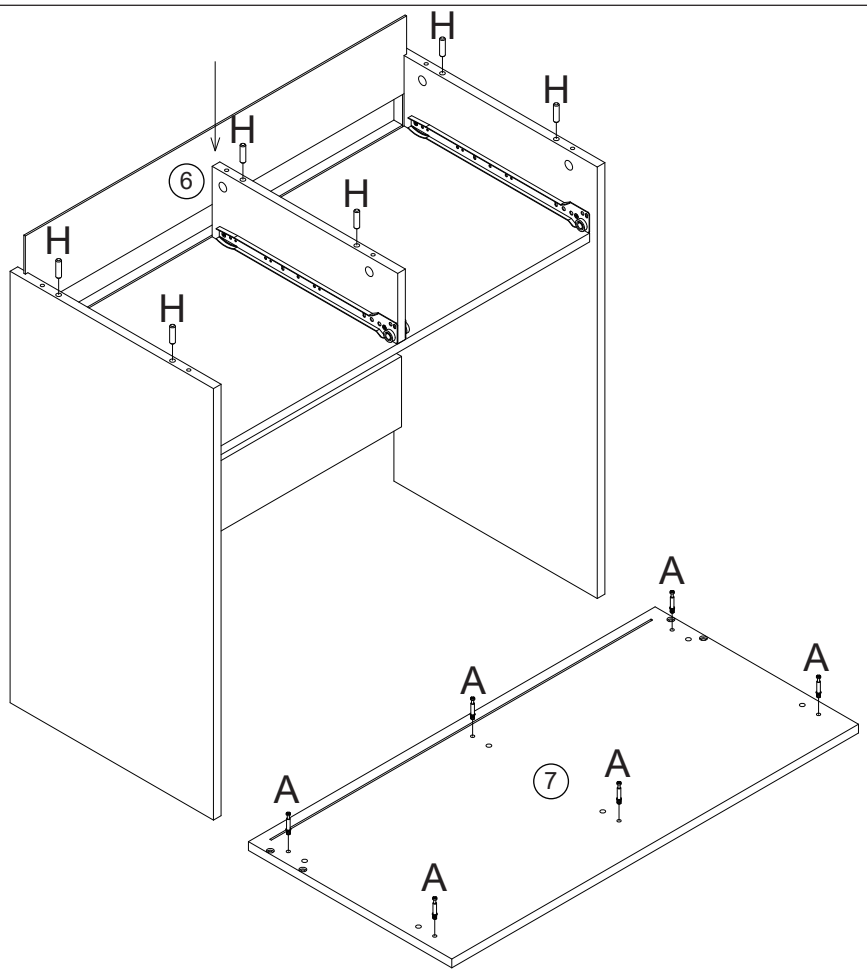

Fittings required

Ax6
Hx6

STEP 8

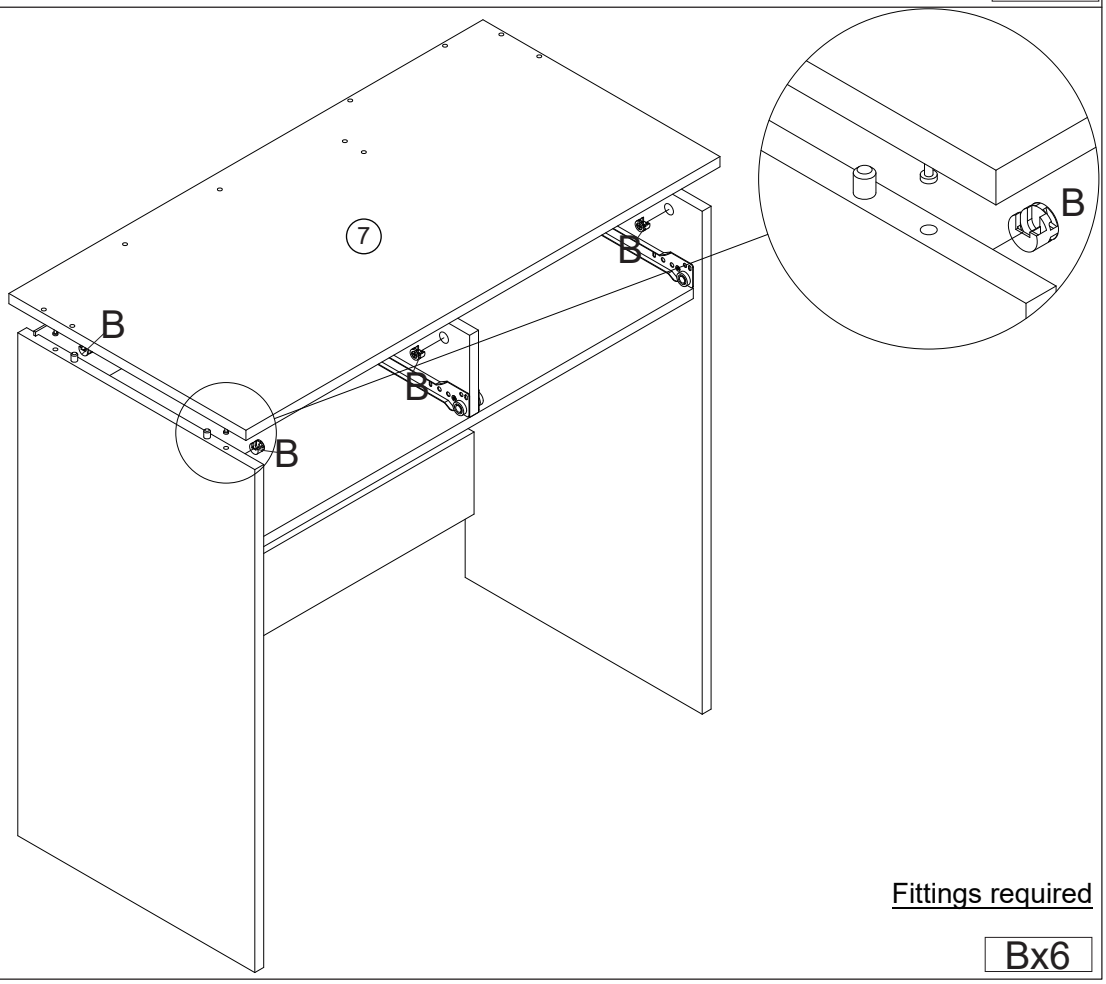

Fittings required

Bx6

EVA DRESSING TABLE & STOOL ASSEMBLY INSTRUCTIONS

STEP 9

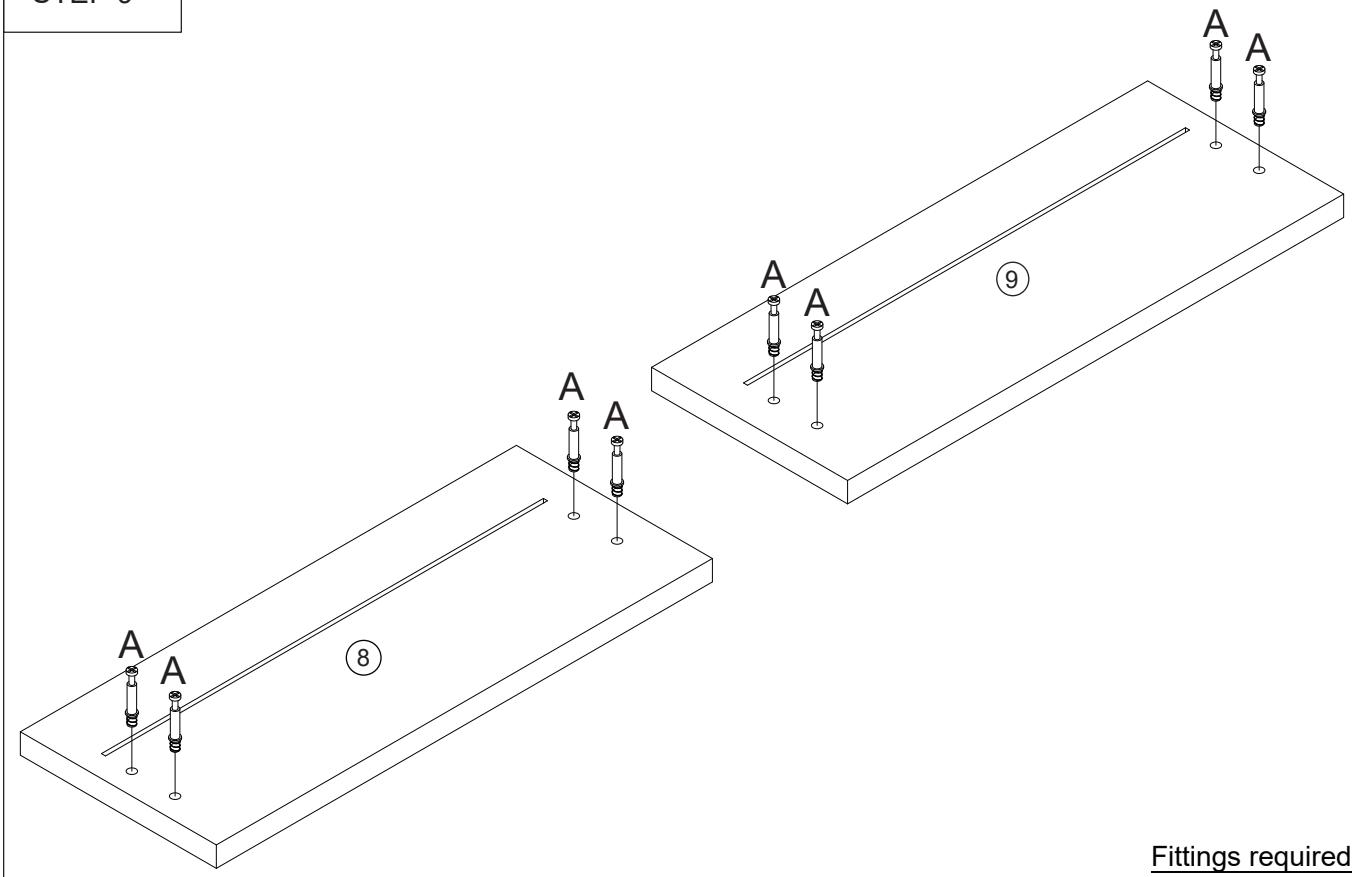

Fittings required

Ax8

STEP 10

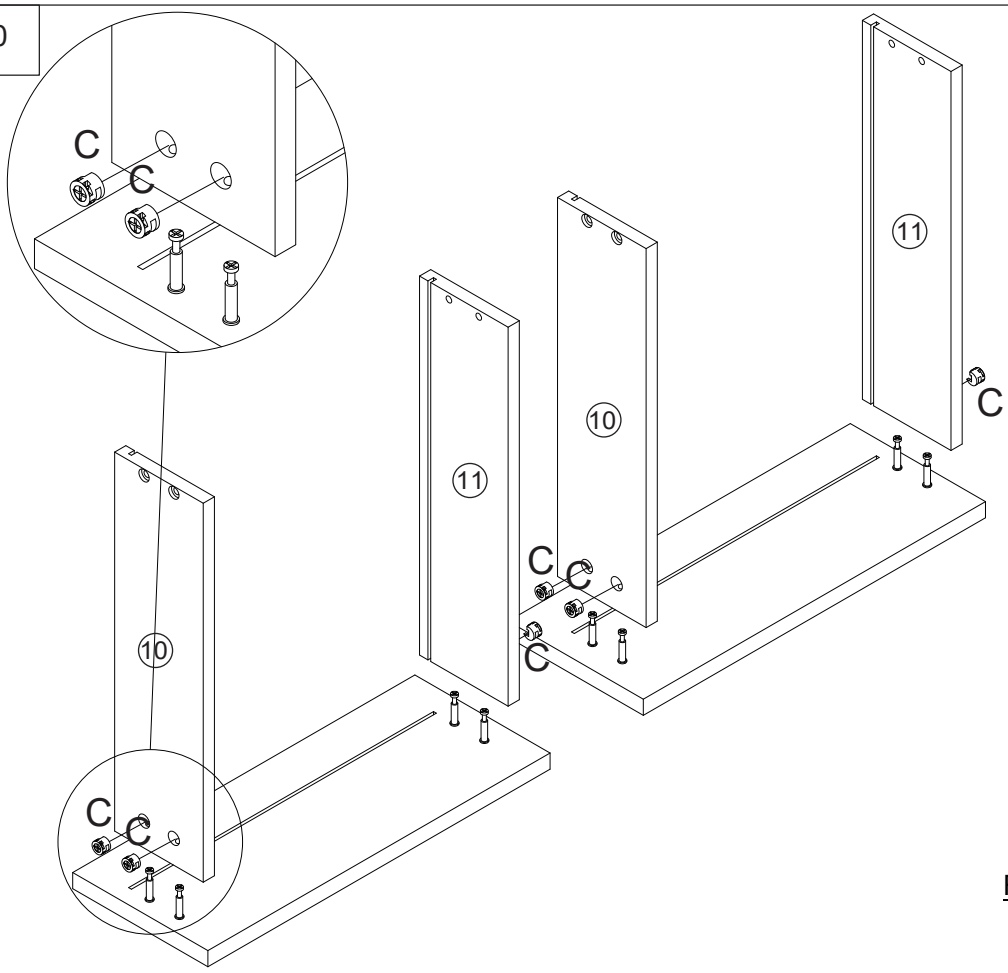

Fittings required

Cx8

EVA DRESSING TABLE & STOOL ASSEMBLY INSTRUCTIONS

STEP 11

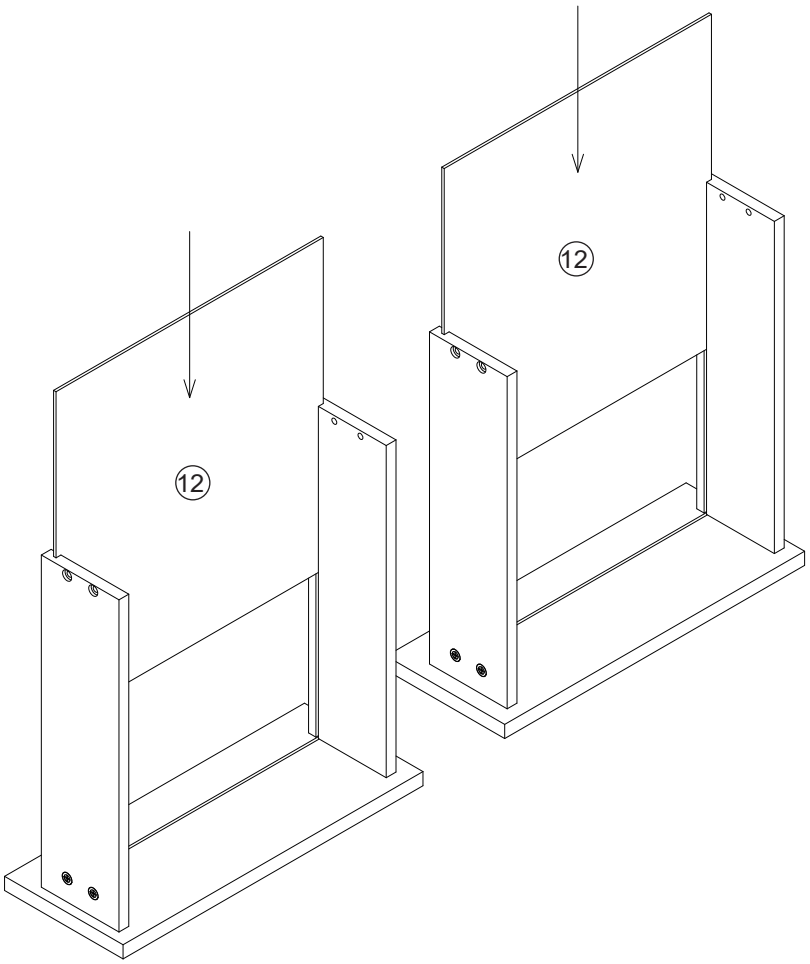

STEP 12

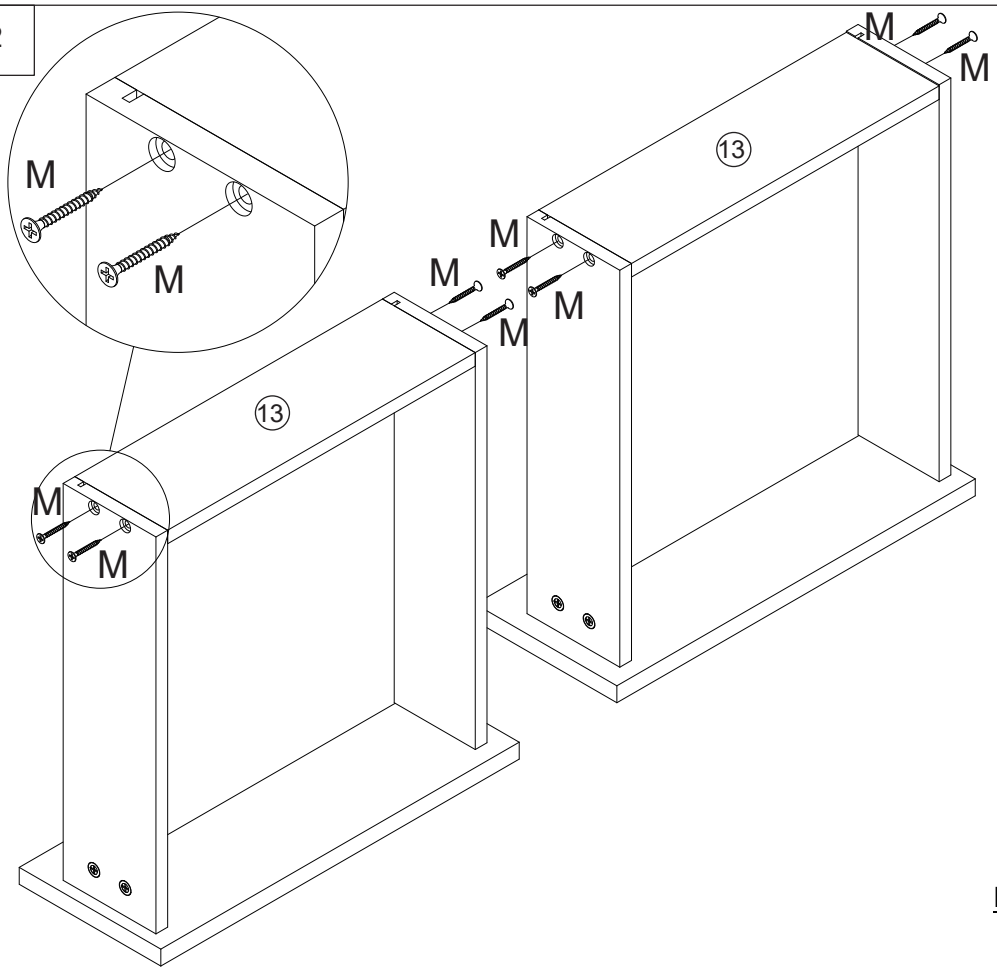

Fittings required

Mx8

EVA DRESSING TABLE & STOOL ASSEMBLY INSTRUCTIONS

STEP 13

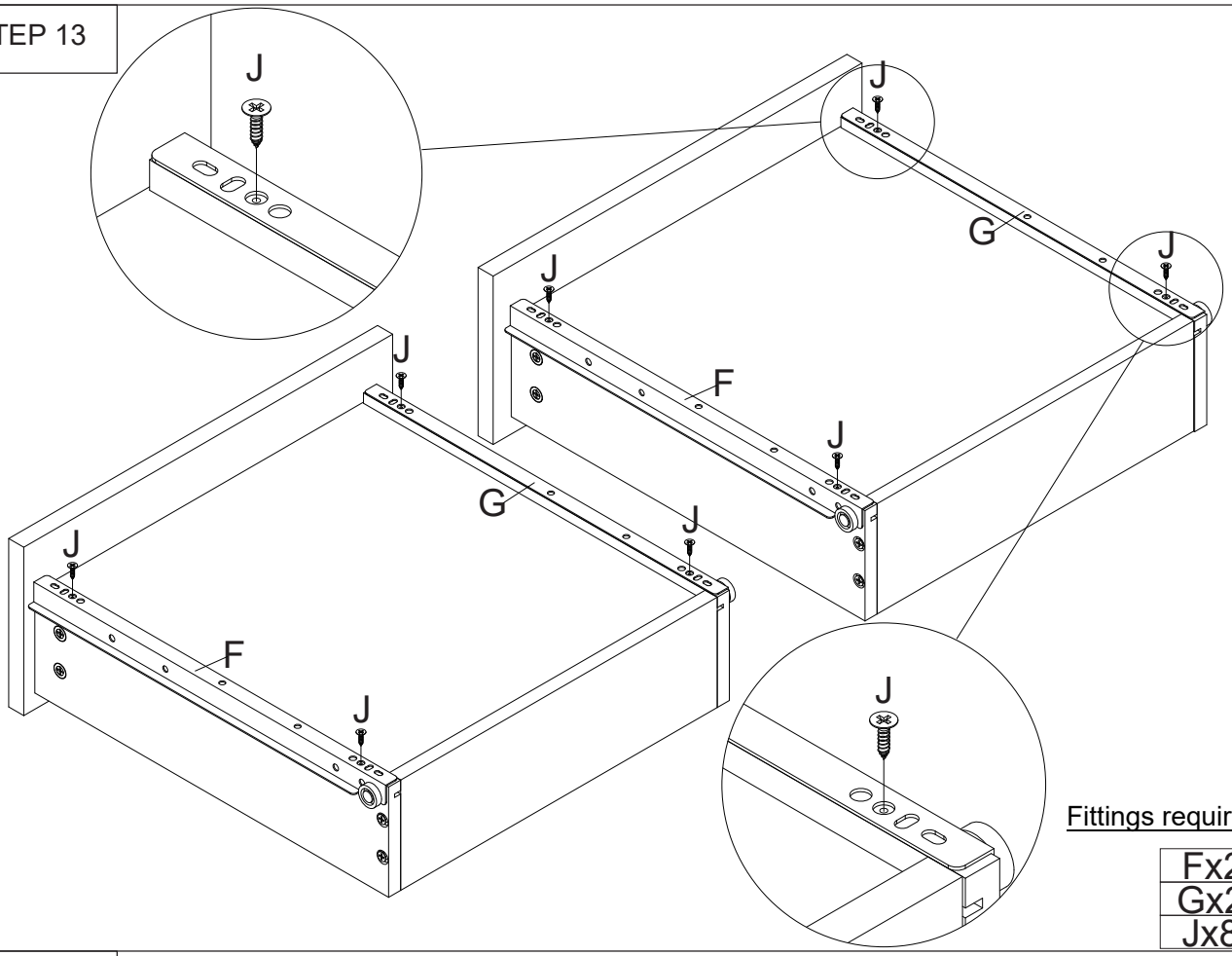

Fittings required

Fx2
Gx2
Jx8

STEP 14

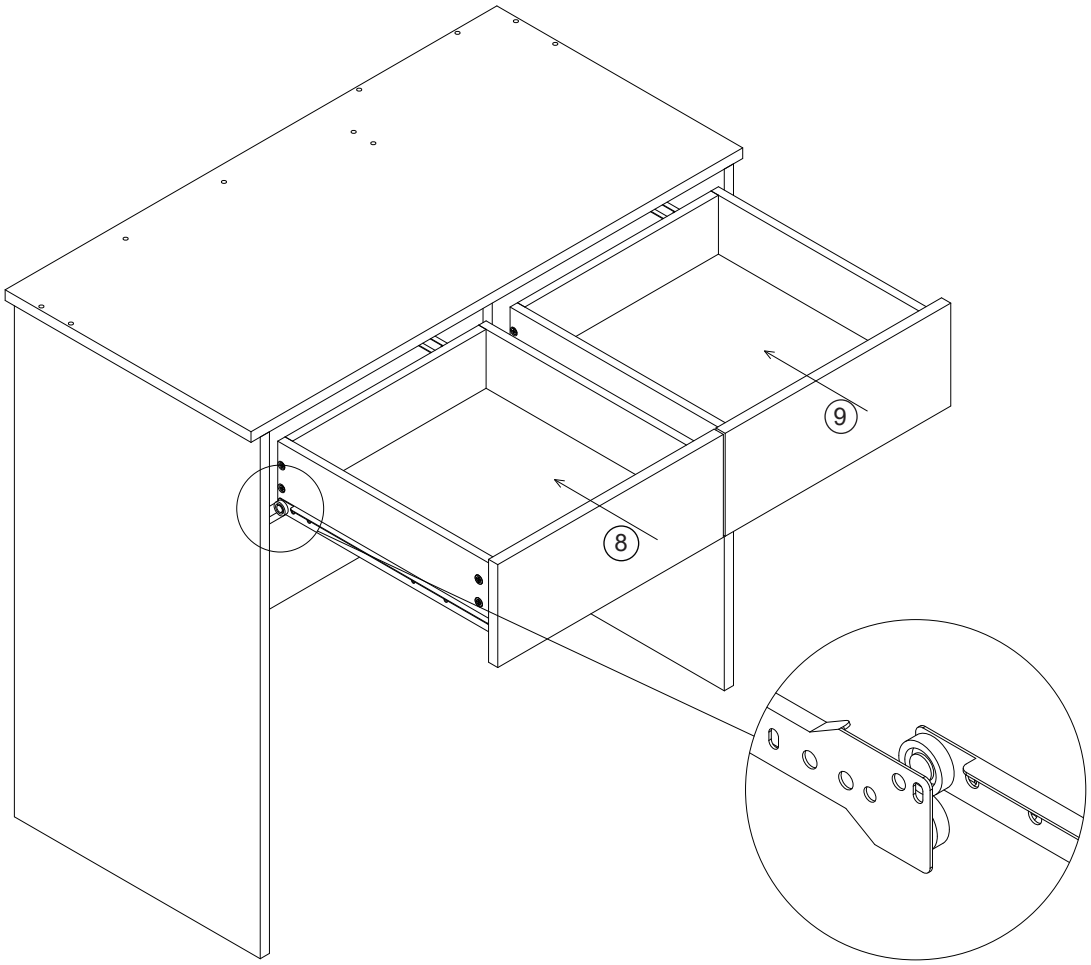

EVA DRESSING TABLE & STOOL ASSEMBLY INSTRUCTIONS

STEP 15

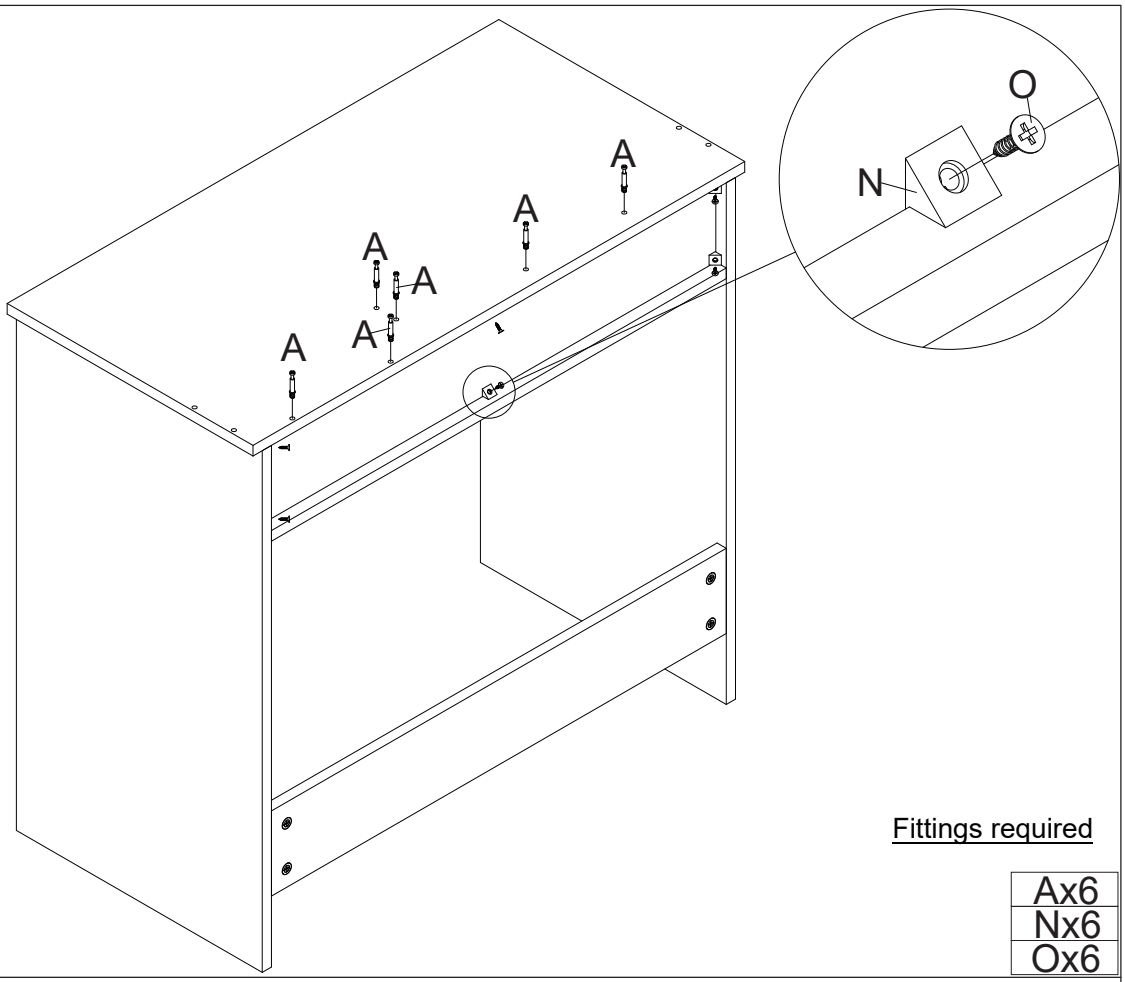

Fittings required

Ax6
Nx6
Ox6

STEP 16

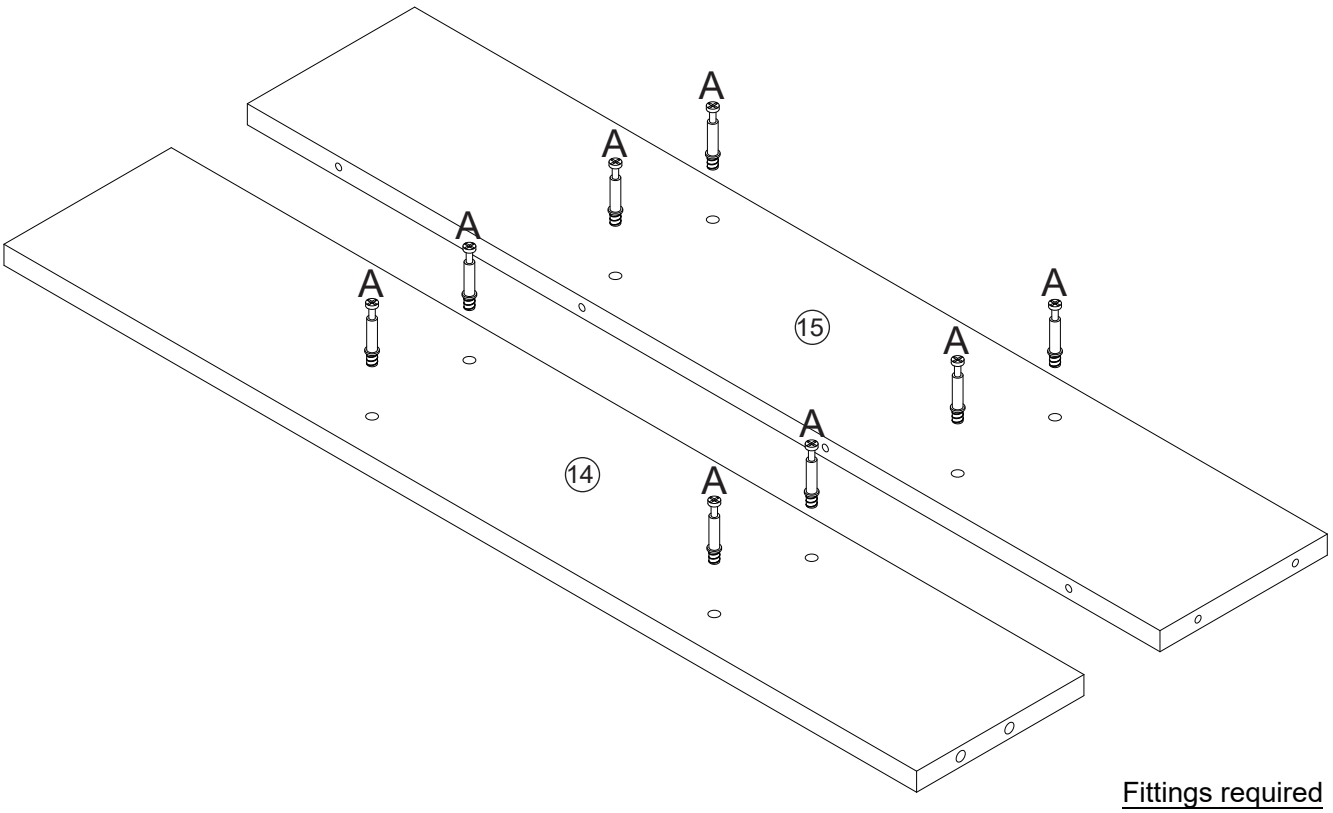

Fittings required

Ax8

EVA DRESSING TABLE & STOOL ASSEMBLY INSTRUCTIONS

STEP 17

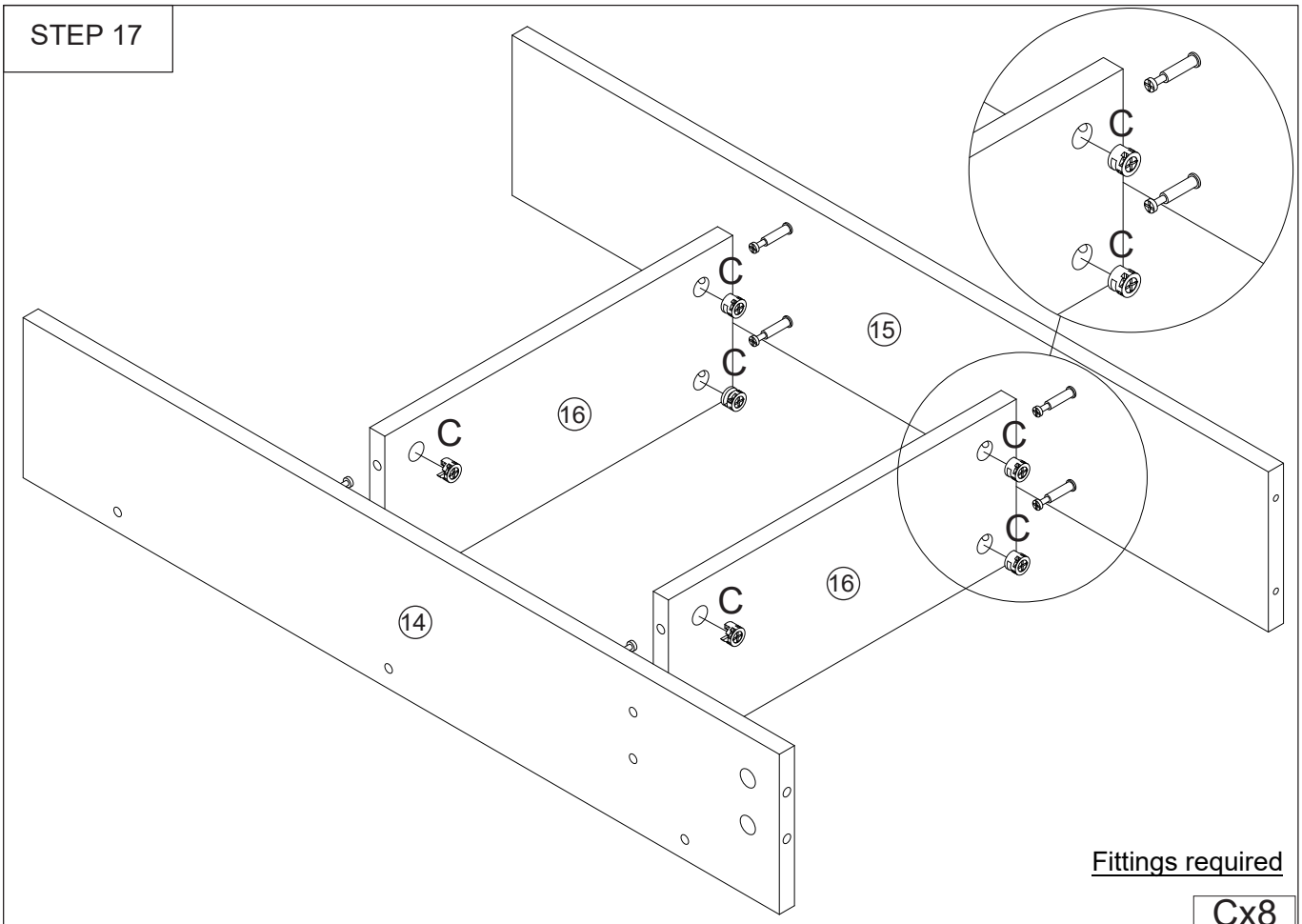

Fittings required

Cx8

STEP 18

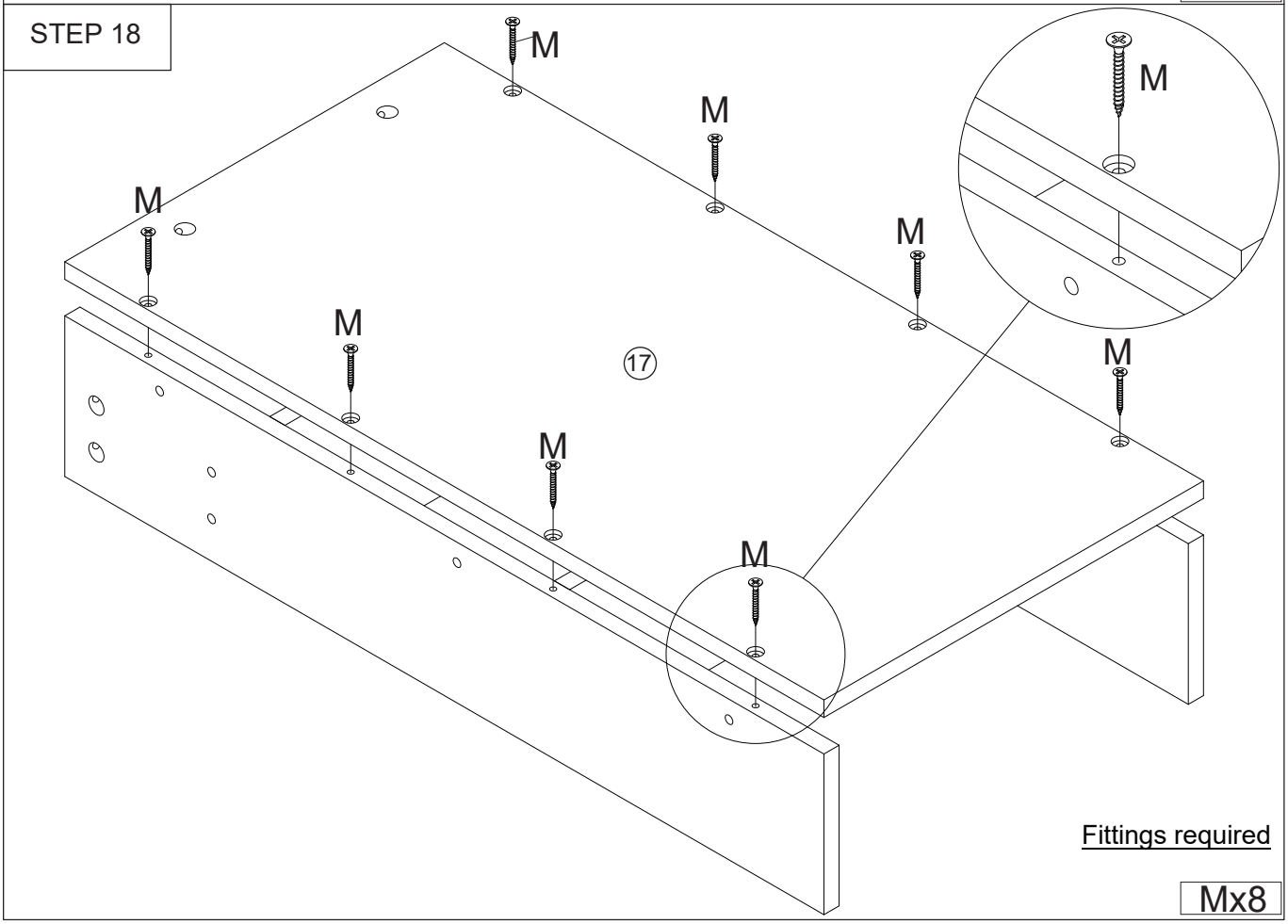

Fittings required

Mx8

EVA DRESSING TABLE & STOOL ASSEMBLY INSTRUCTIONS

STEP 19

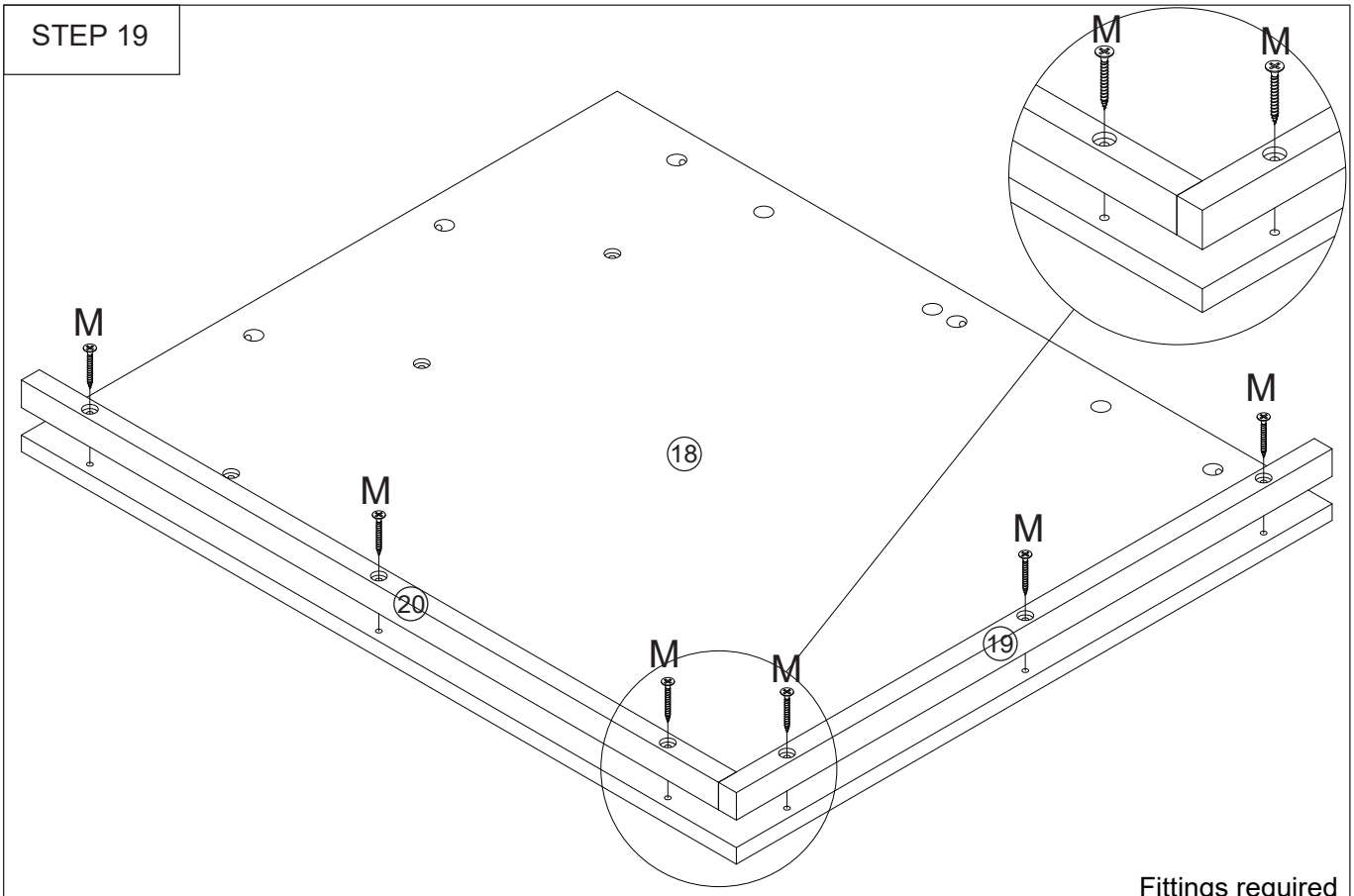

Fittings required

Mx6

STEP 20

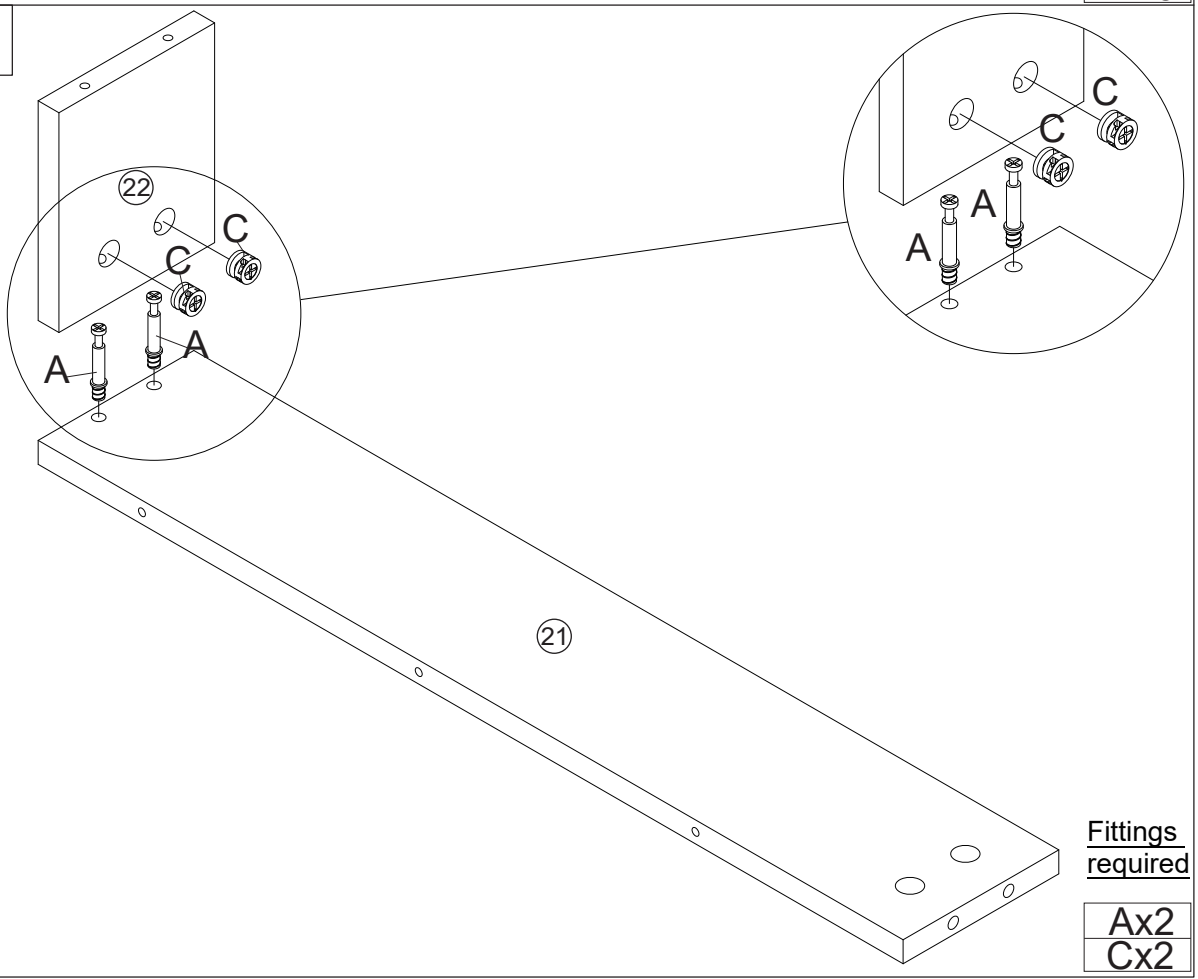

Fittings required

Ax2
Cx2

EVA DRESSING TABLE & STOOL ASSEMBLY INSTRUCTIONS

STEP 21

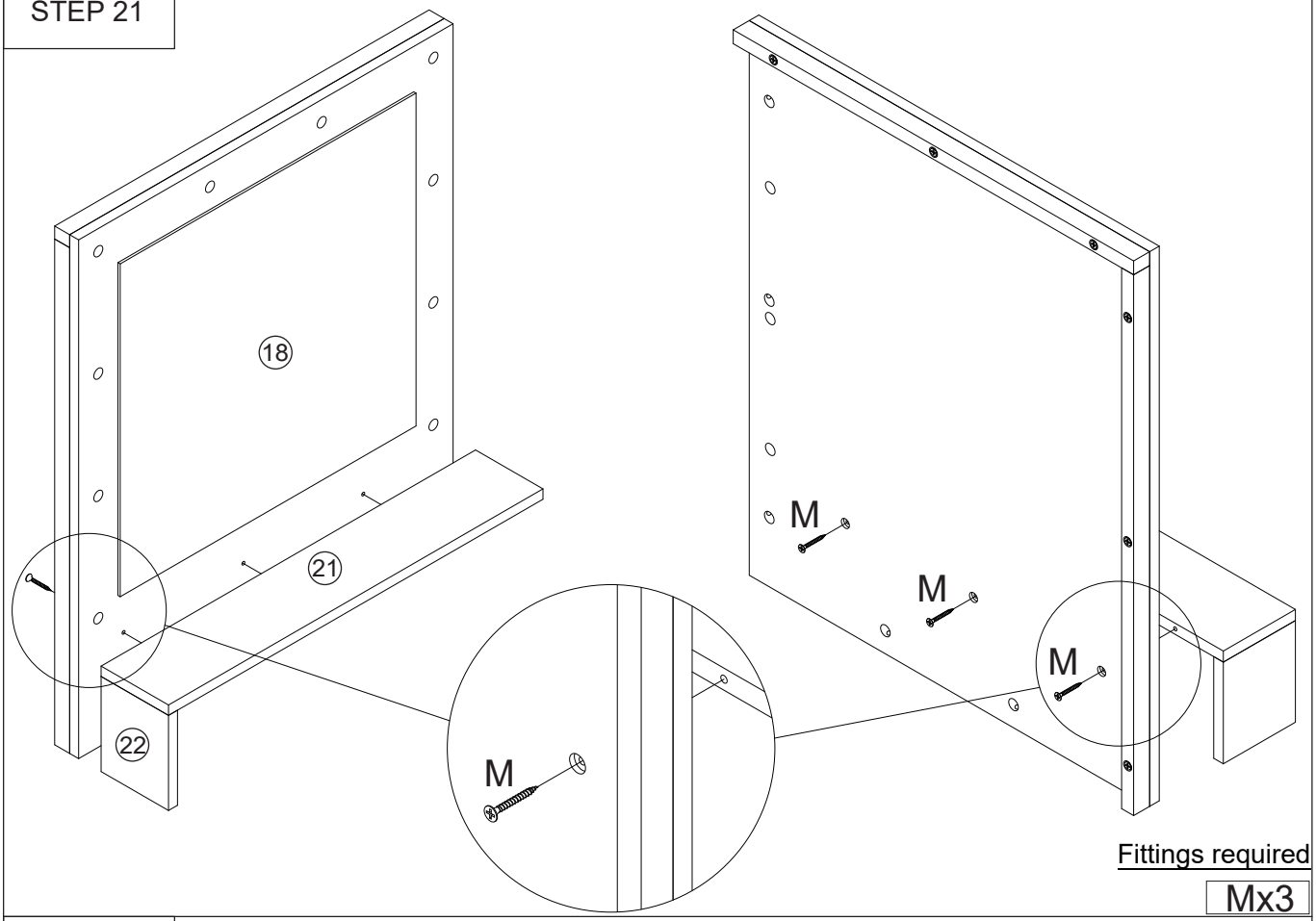

Fittings required

Mx3

STEP 22

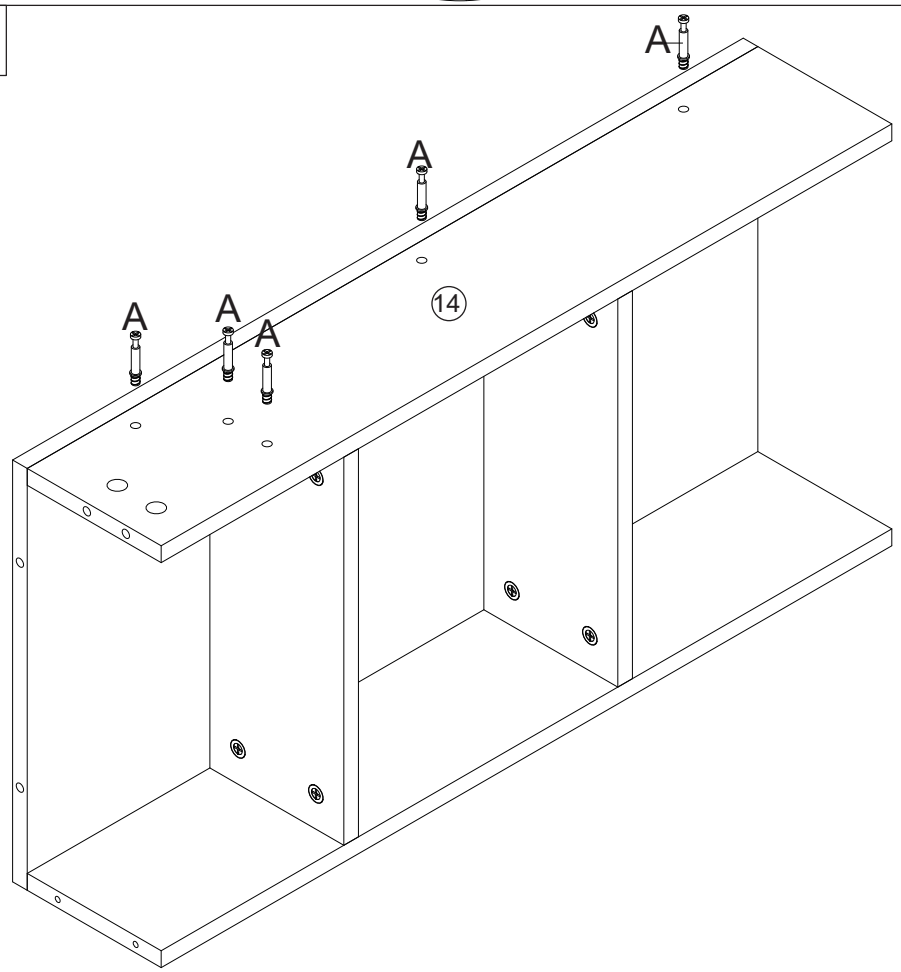

Fittings required

Ax5

EVA DRESSING TABLE & STOOL ASSEMBLY INSTRUCTIONS

STEP 23

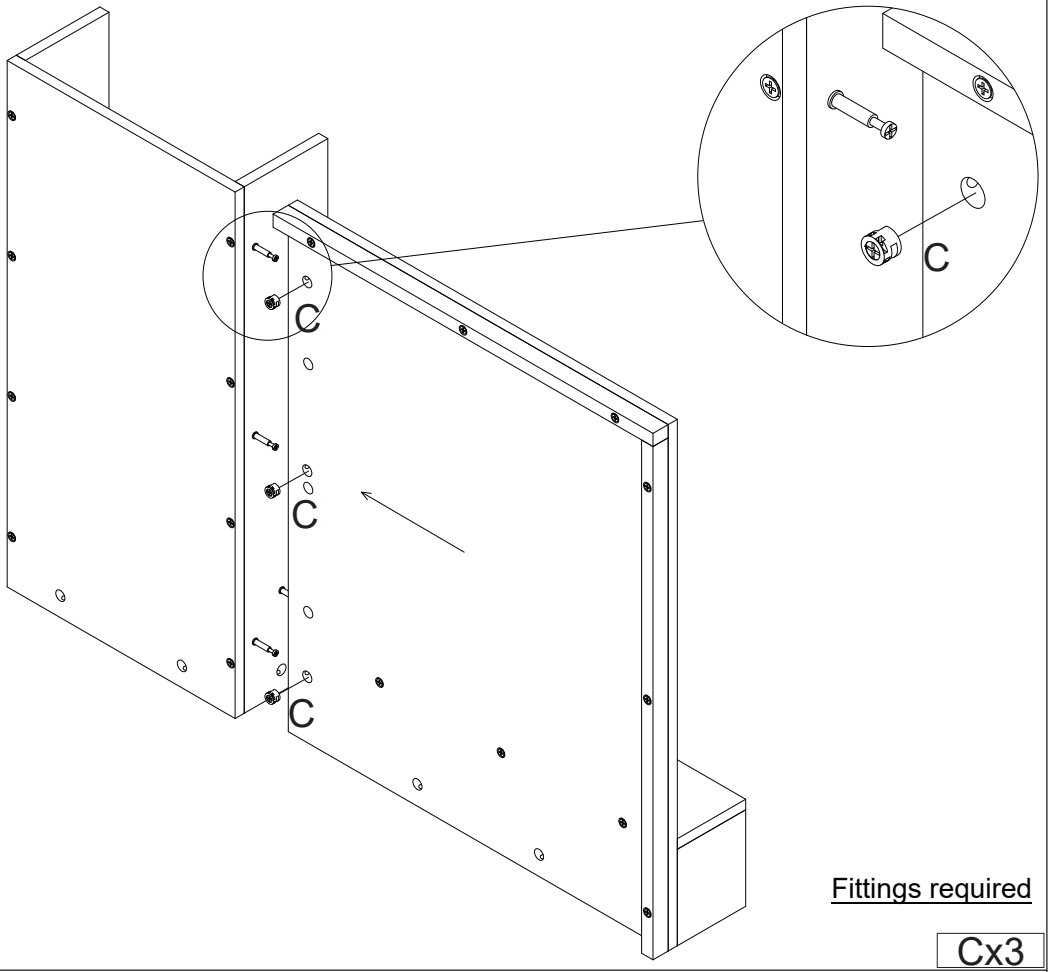

Fittings required

Cx3

STEP 24

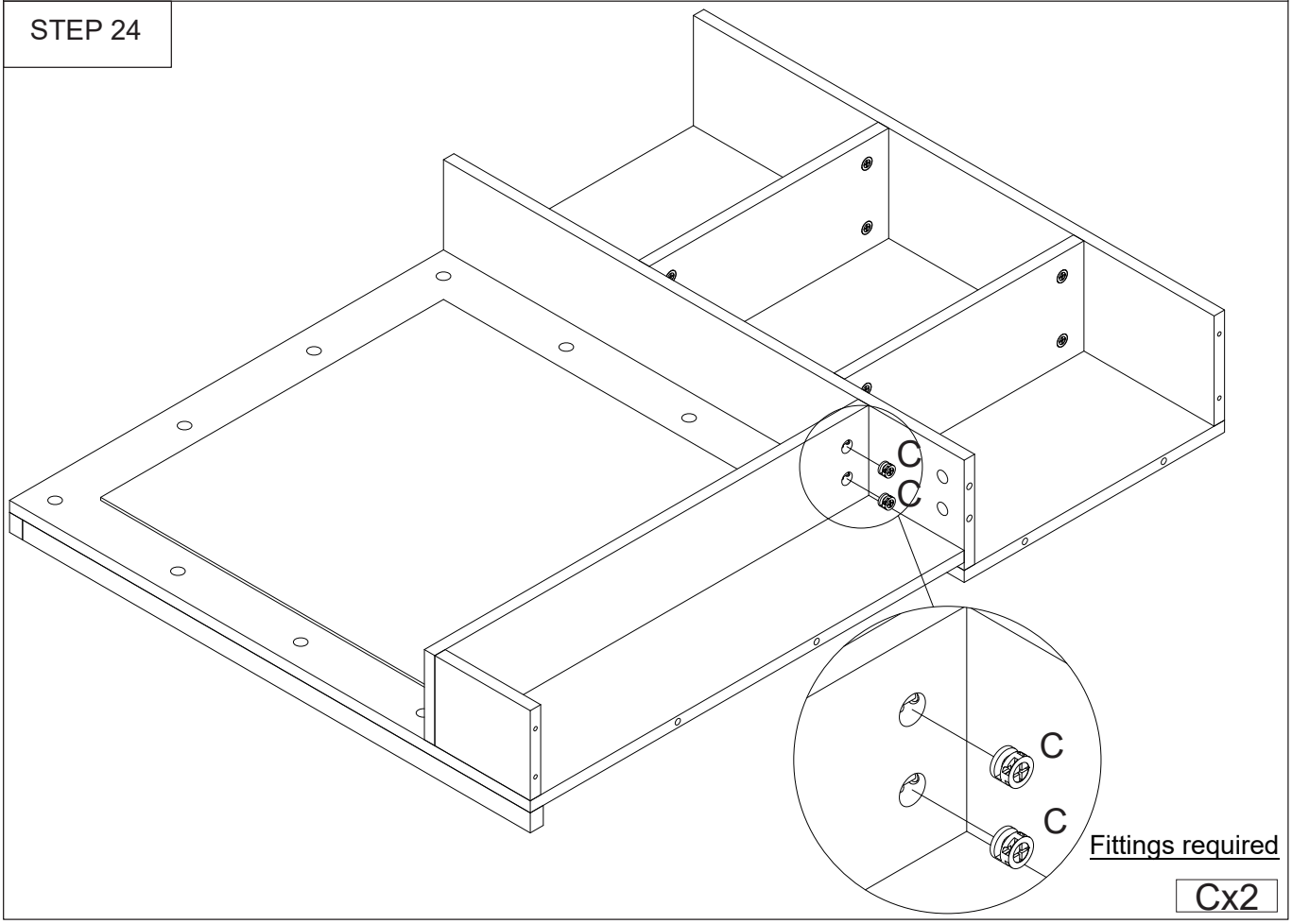

Fittings required

Cx2

EVA DRESSING TABLE & STOOL ASSEMBLY INSTRUCTIONS

STEP 25

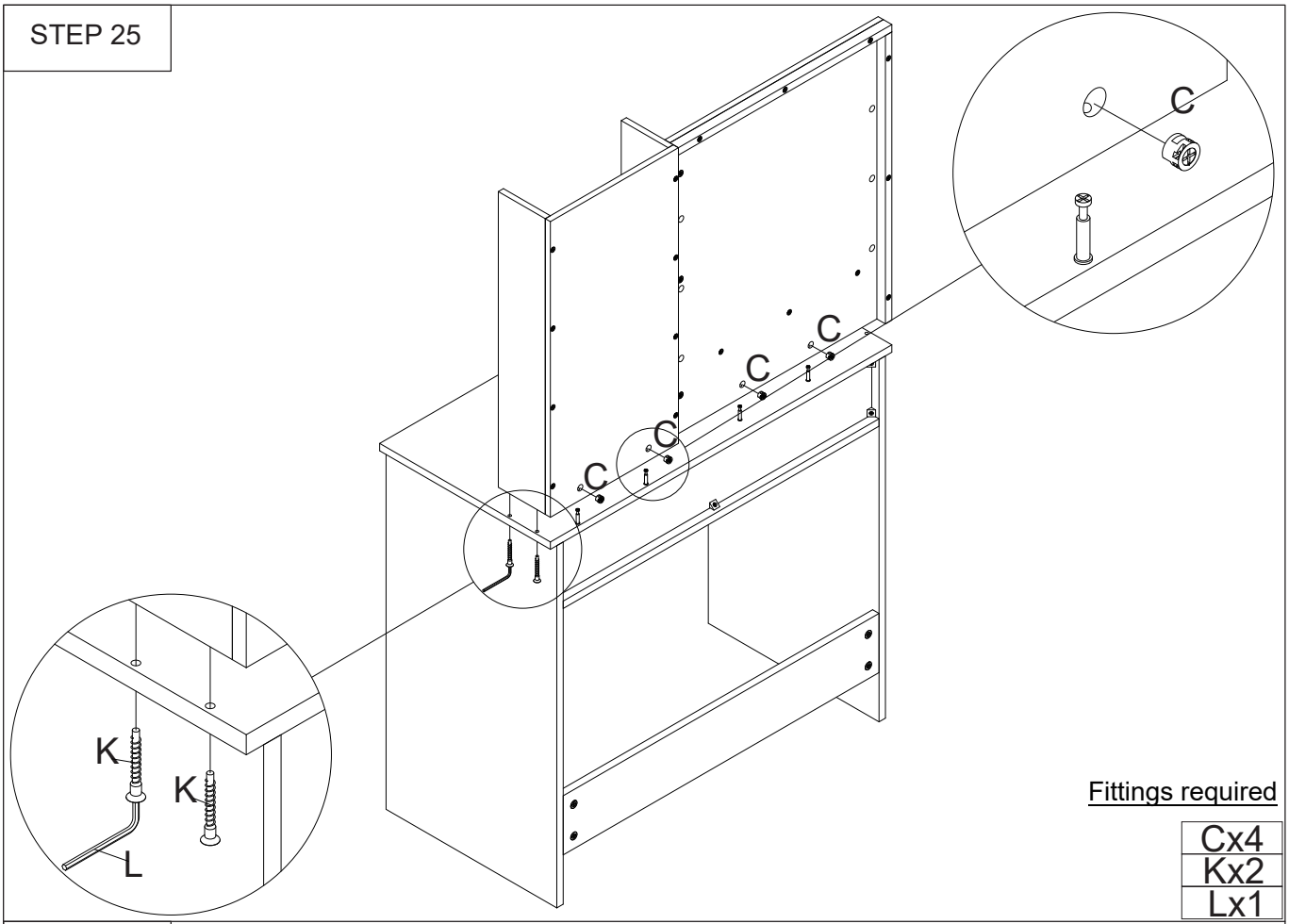

Fittings required

Cx4
Kx2
Lx1

STEP 26

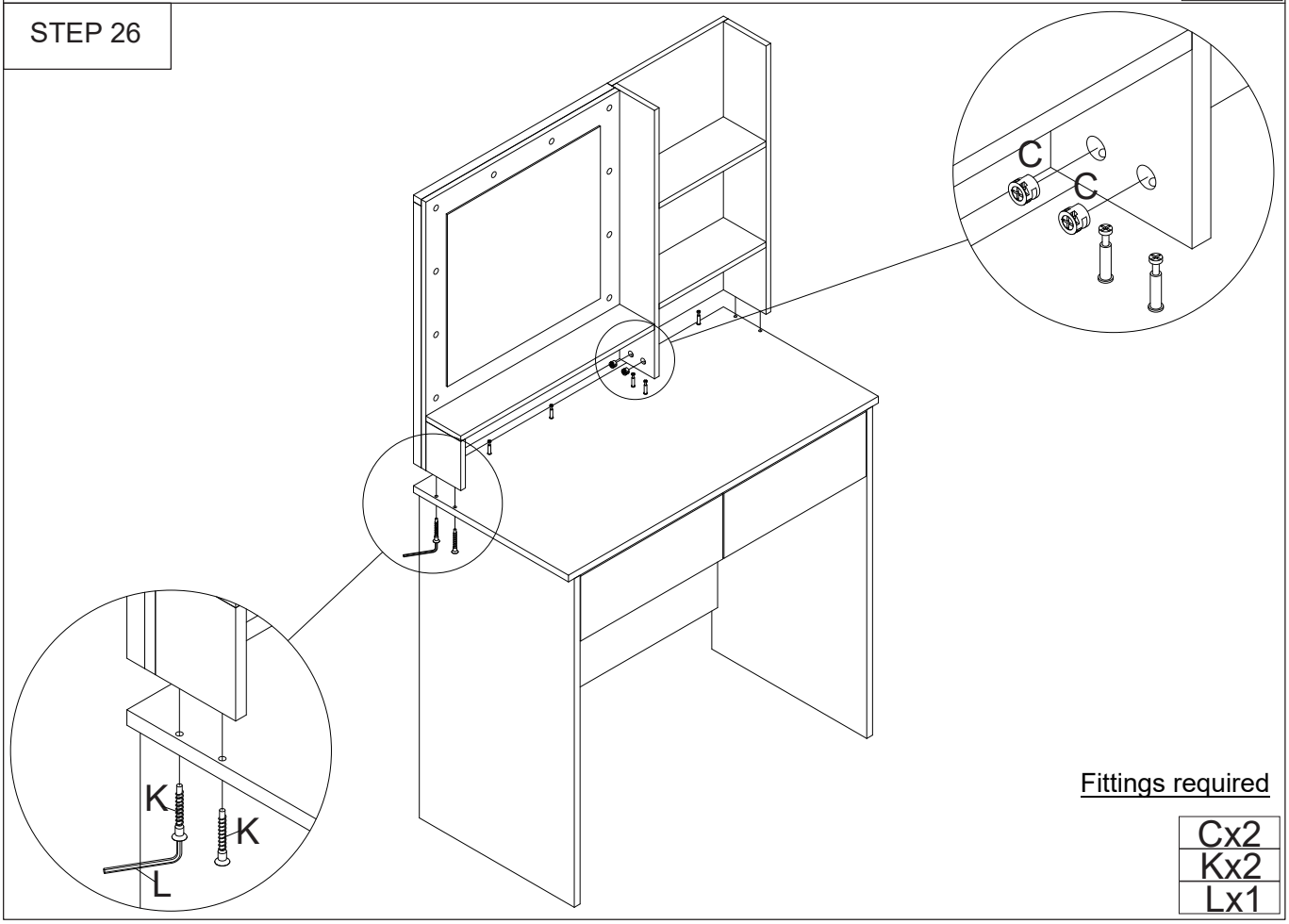

Fittings required

Cx2
Kx2
Lx1

EVA DRESSING TABLE & STOOL ASSEMBLY INSTRUCTIONS

STEP 27

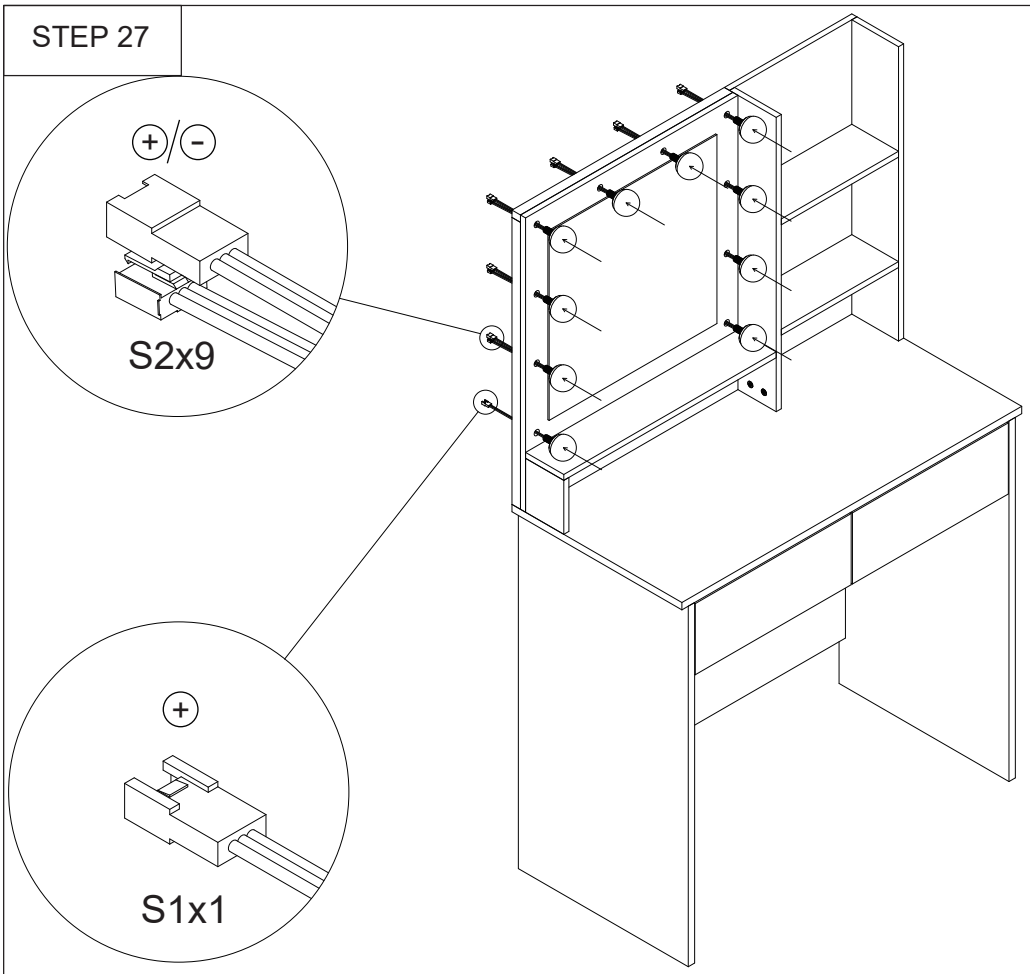

Fittings required

S1x1
S2x9

STEP 28

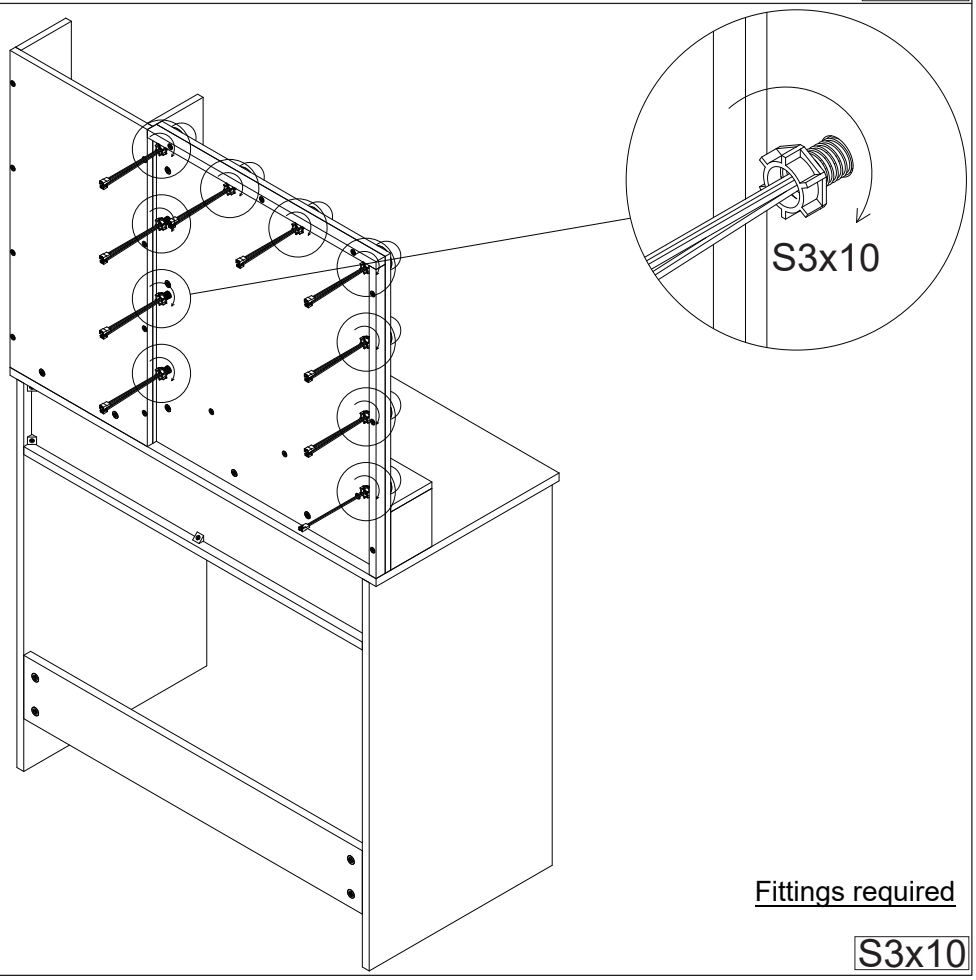

Fittings required

S3x10

EVA DRESSING TABLE & STOOL ASSEMBLY INSTRUCTIONS

STEP 29

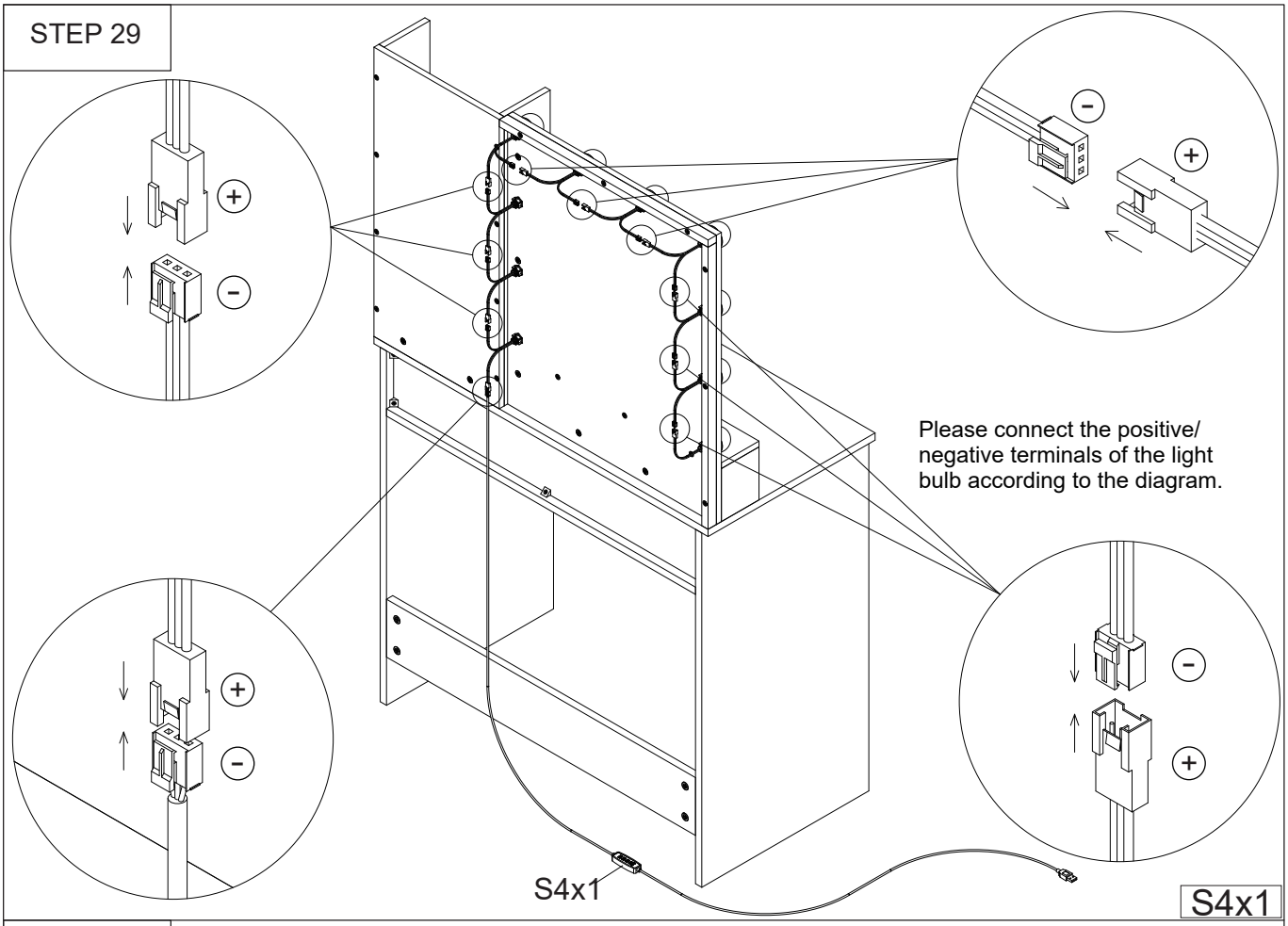

S4x1

STEP 30

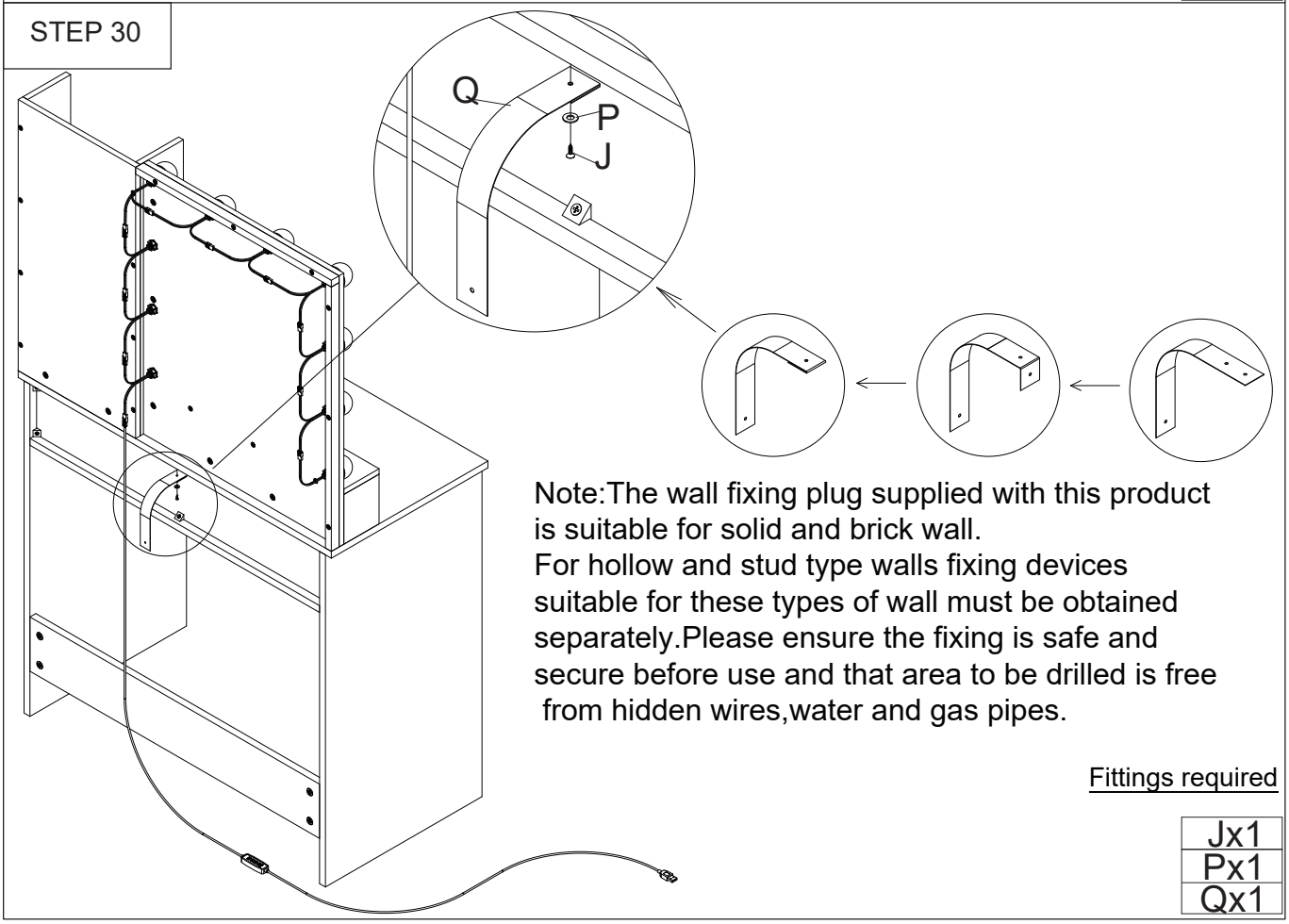

Note:The wall fixing plug supplied with this product is suitable for solid and brick wall.
For hollow and stud type walls fixing devices suitable for these types of wall must be obtained separately.Please ensure the fixing is safe and secure before use and that area to be drilled is free from hidden wires,water and gas pipes.

Fittings required

Jx1
Px1
Qx1

EVA DRESSING TABLE & STOOL ASSEMBLY INSTRUCTIONS

STEP 31

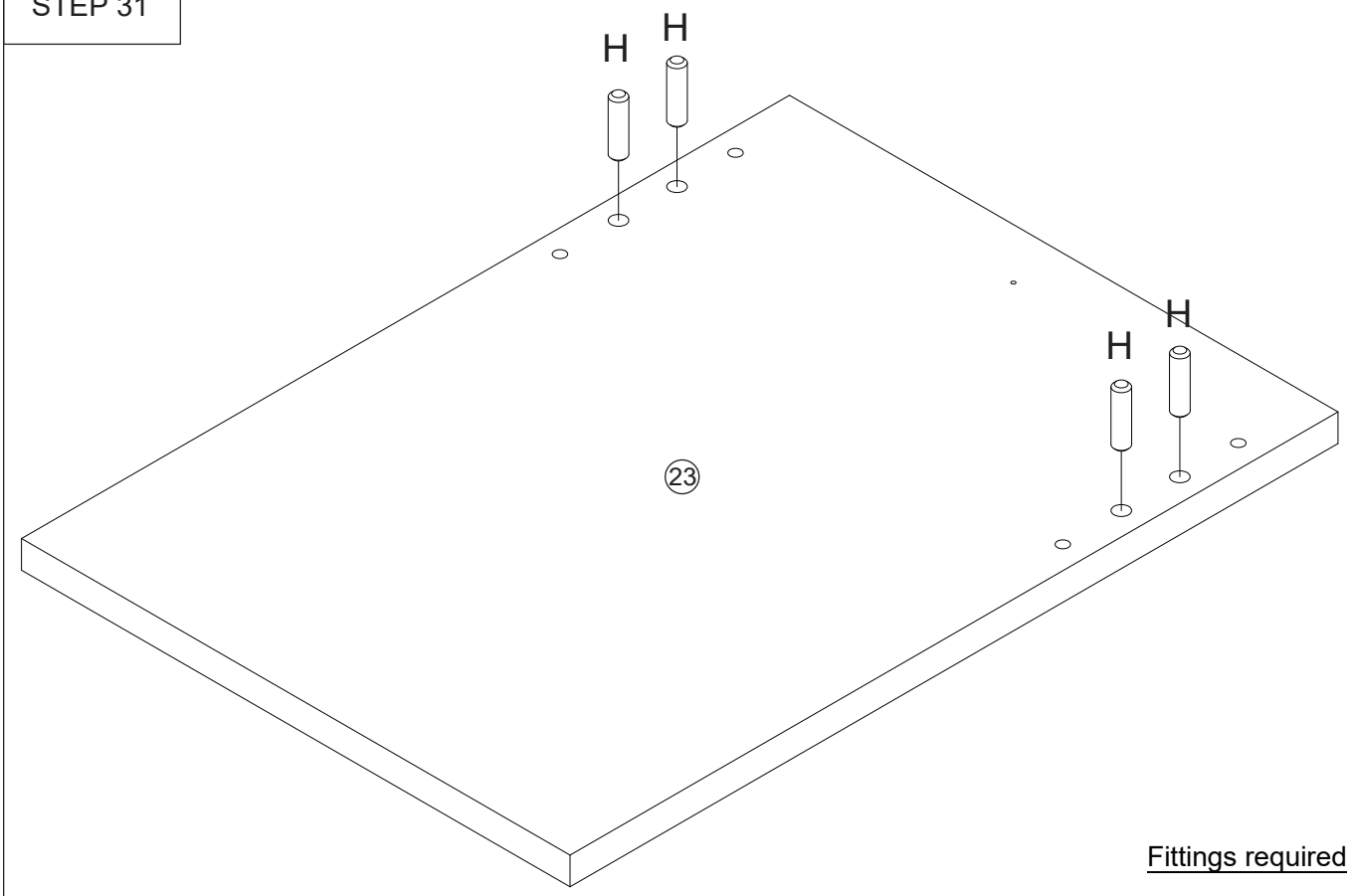

Fittings required

Hx4

STEP 32

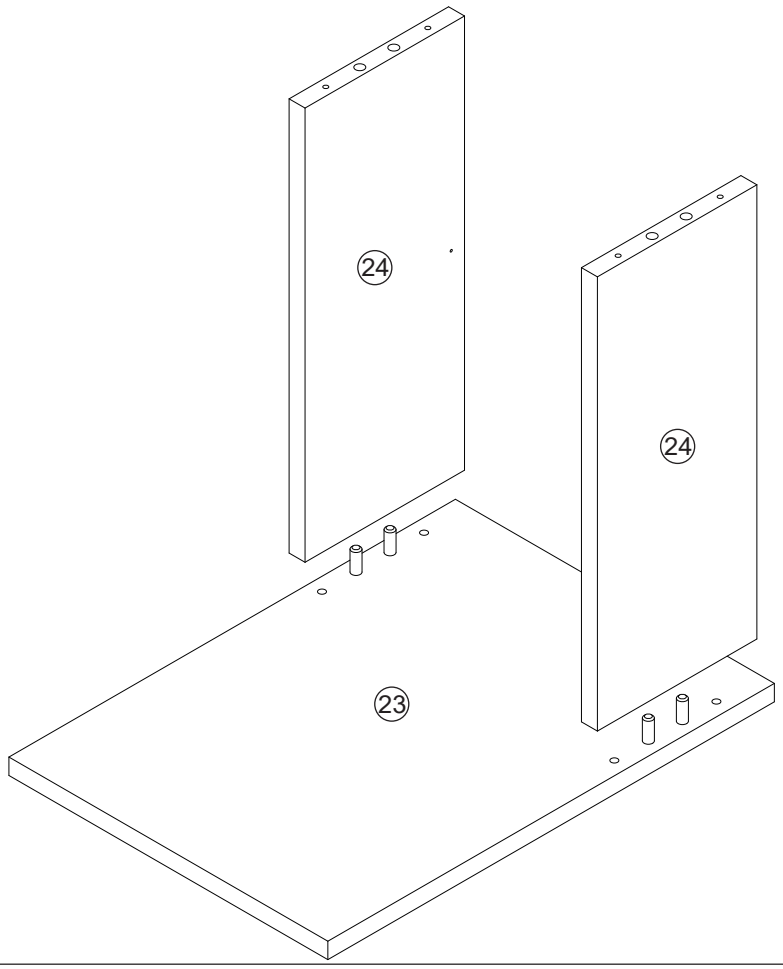

EVA DRESSING TABLE & STOOL ASSEMBLY INSTRUCTIONS

STEP 33

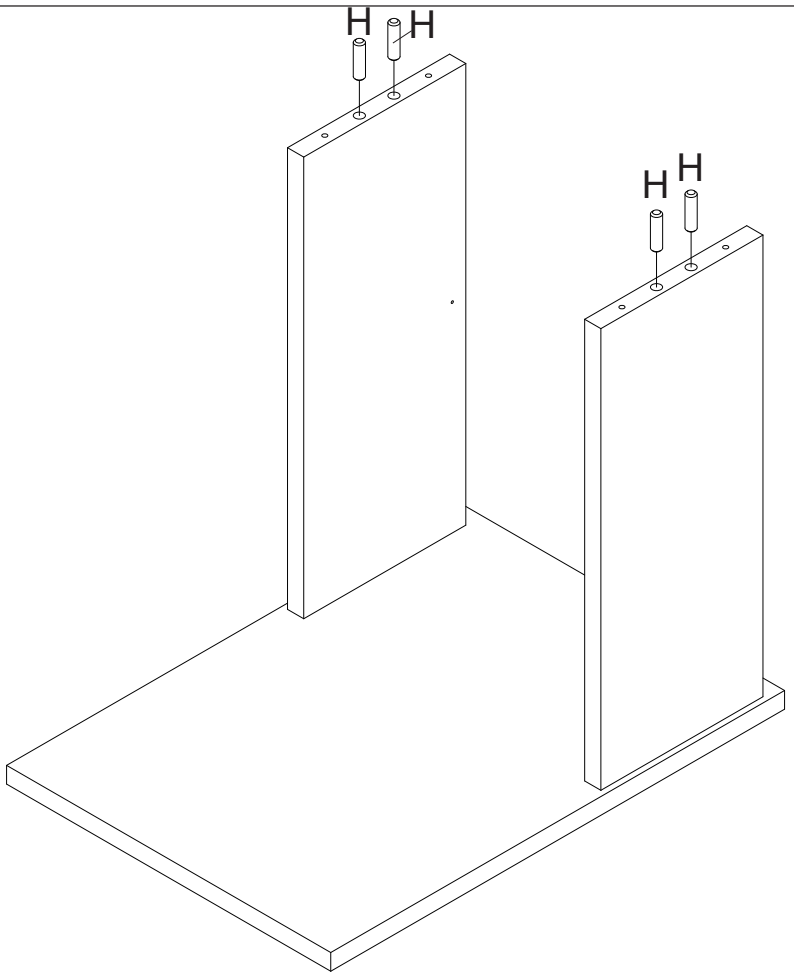

Fittings required

Hx4

STEP 34

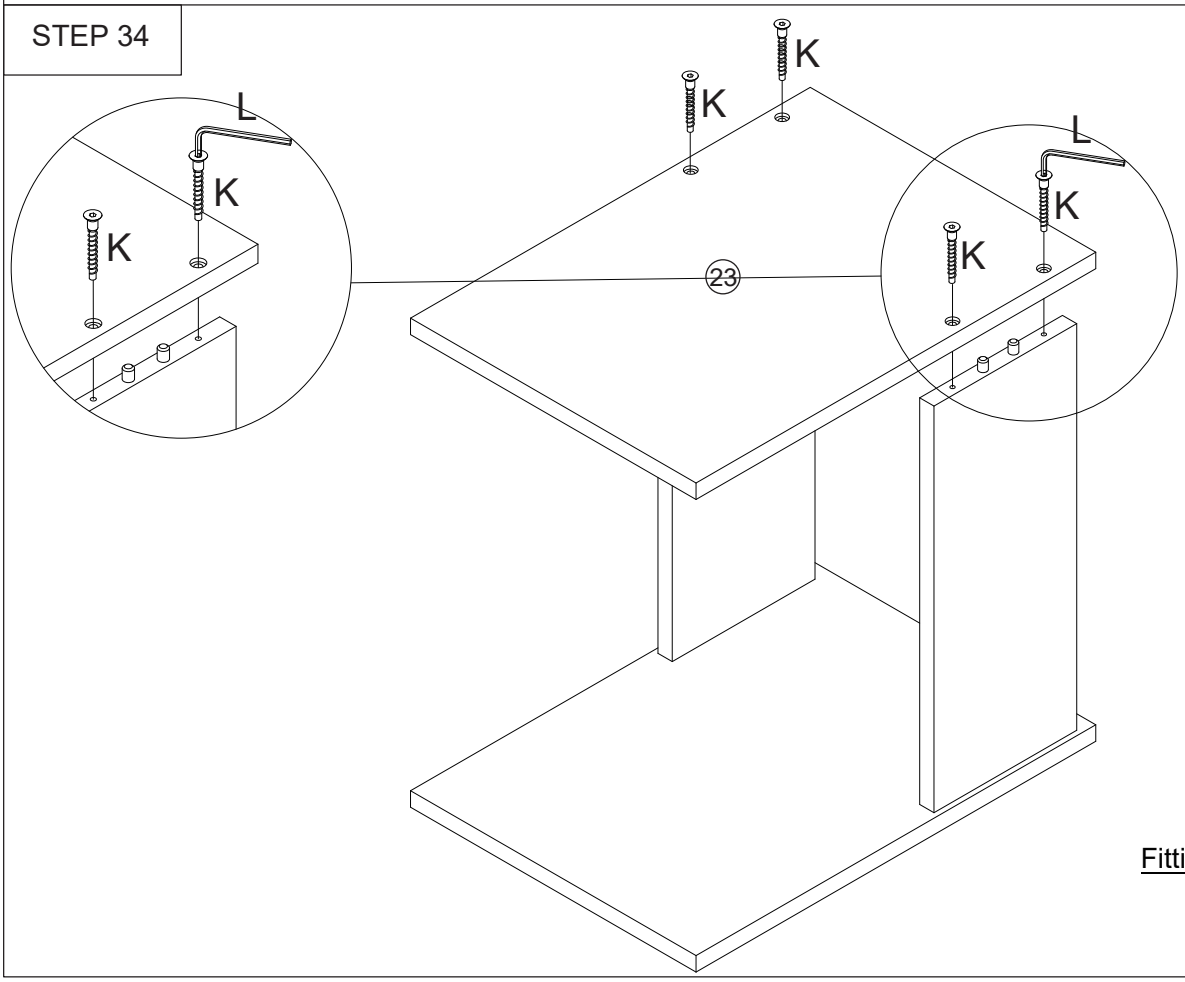

Fittings required

Kx4
Lx1

EVA DRESSING TABLE & STOOL ASSEMBLY INSTRUCTIONS

STEP 35

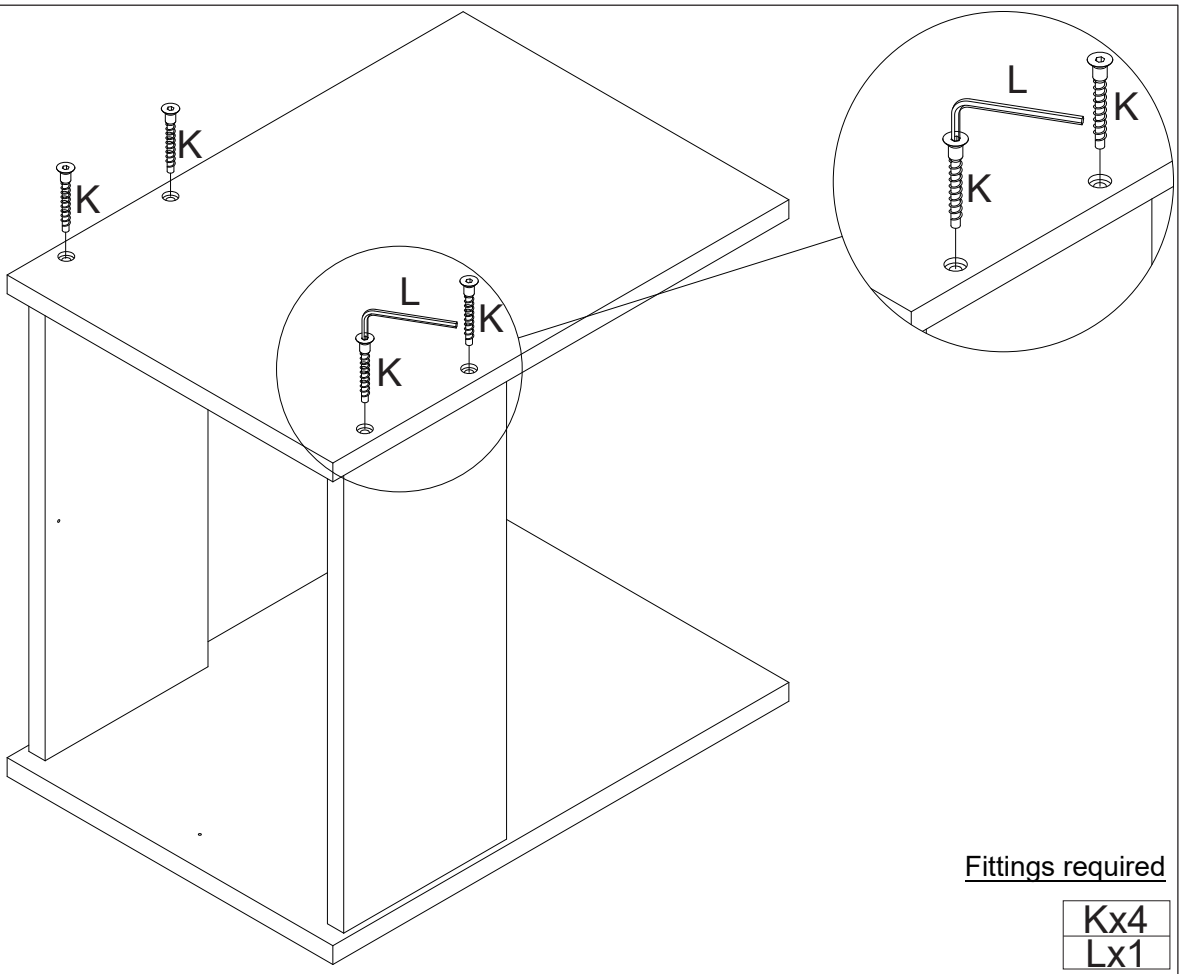

Fittings required

Kx4
Lx1

STEP 36

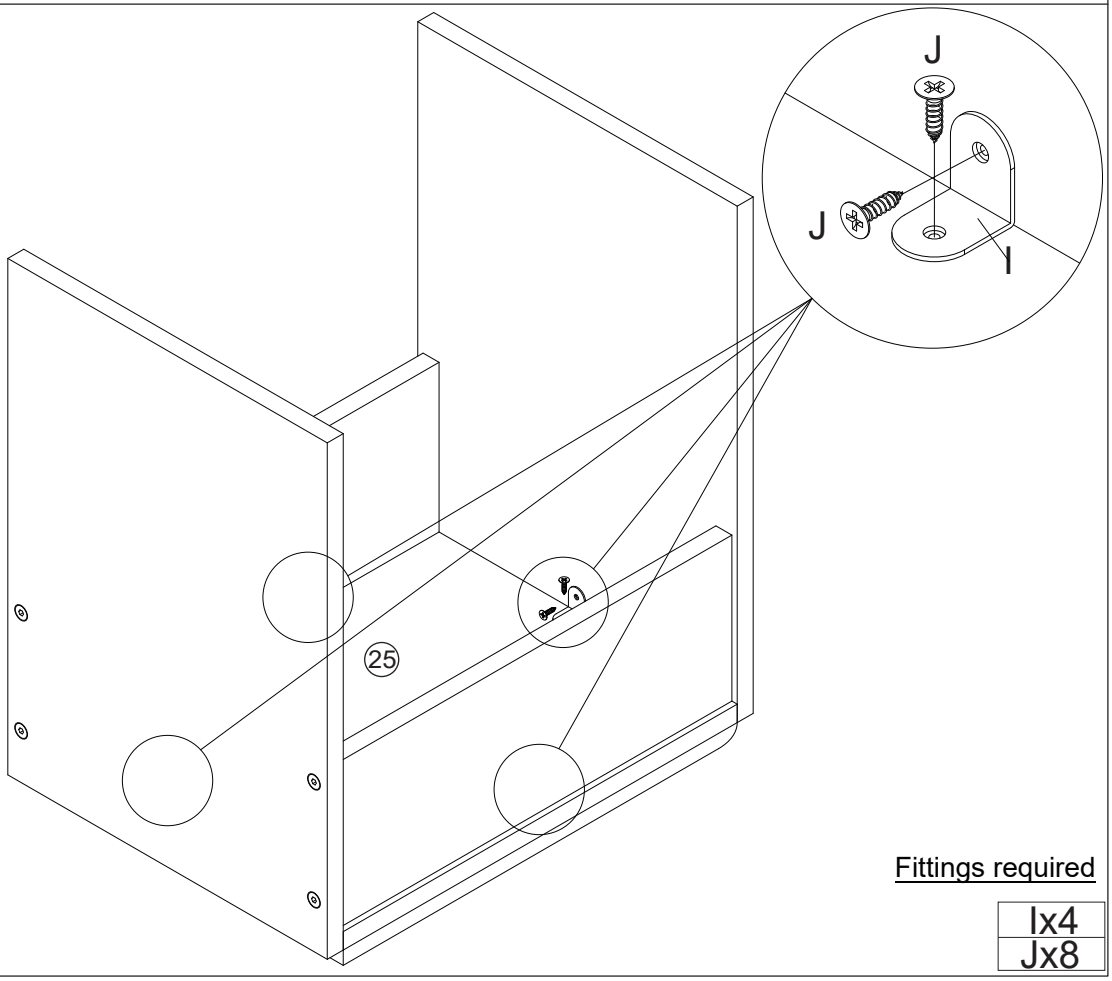

Fittings required

Ix4
Jx8

EVA DRESSING TABLE & STOOL ASSEMBLY INSTRUCTIONS

STEP 37

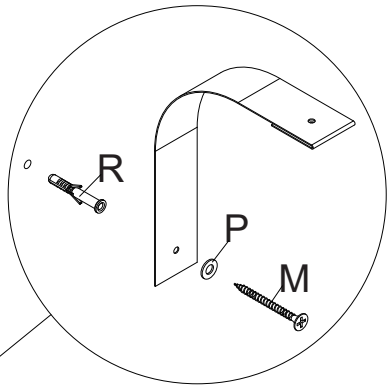

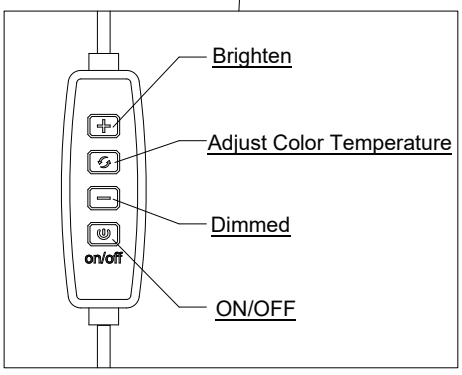

This LED vanity mirror features 3 LED light colors that can be switched according to needs: natural light, warm light and cold light, and the brightness is adjustable. Get the ideal lighting effect by operating the remote control switch.

Fittings required

Mx1
Px1
Rx1

Complete Assembly

Your EVA DRESSING TABLE & STOOL is now completely assembled.
Periodically check to ensure that the components are in their proper position and free from damage.
Also, make sure the connectors are tight and secure.

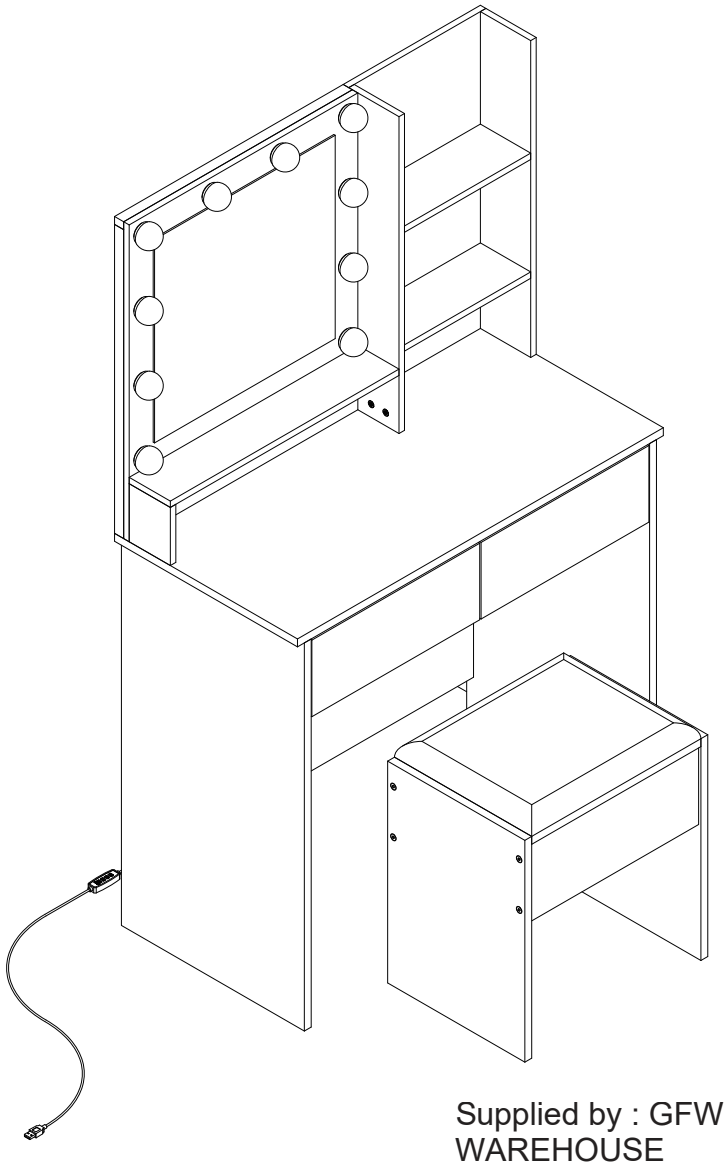

Keep instructions for future reference.

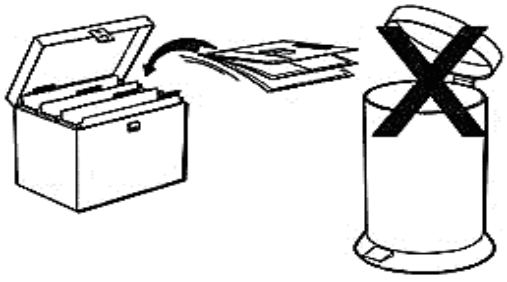

Supplied by : GFW THE FURNITURE WAREHOUSE
Waterside Distribution Centre
Waterside Business Park
Johnson Road Lancashire
BB3 3RT
www.gfwlimited.co.uk

Represented by:
Authorised Rep Compliance Ltd
71 Lower Baggot Street
Dublin
D02 P593
Ireland
www.arccompliance.com