P-Trap Installation:

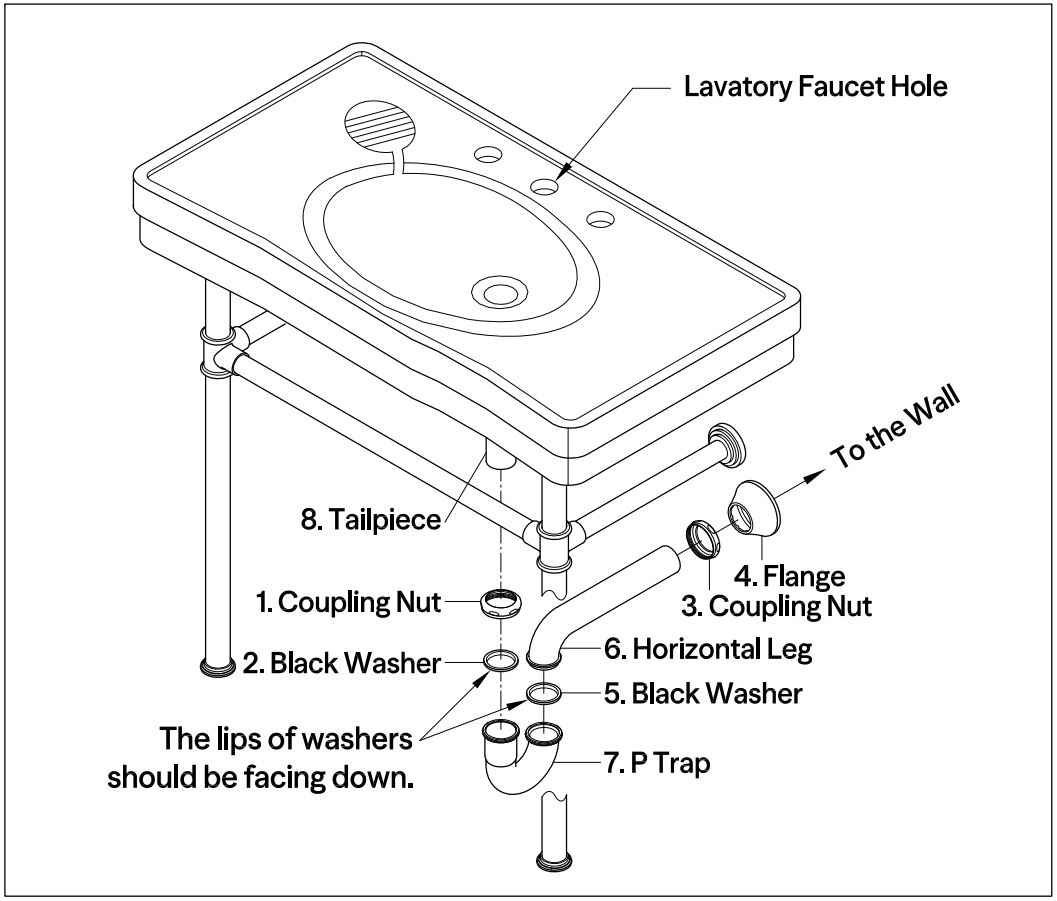

1. Insert horizontal leg (6) into wall drain stub-out.
2. Remove coupling nut (1) and black washer (2) from the P-trap (7) .
3. Insert coupling nut (1) and black washer (2) onto the tailpiece (8), make sure the lip of washer is facing down.
4. Attach P-trap to the tailpiece (8). Slowly and carefully move the black washer (2) down to touch the inlet of P-trap (7) by hand. Then tighten up the coupling nut (1).
5. Align P-trap (7) with horizontal leg (6) and tailpiece (8), at this point it may be necessary to cut part of tailpiece (8) or part of horizontal leg (6) to obtain proper alignment.
6. Check if all components are properly tightened.
7. Run water. If leaks appears and tightening doesn't correct it, loosen coupling nuts (1) or (3), check black washers (2) and (5) are properly installed. Retighten coupling nuts (1) or (3).

Cleaning Instructions: Wipe this whole set off with warm water and a soft cloth. Do not use soaps, cleansers, or brass cleaners as they will disintegrate the protective coating and leave the brass exposed therefore causing tarnishing.

KINGSTON

FAUCETURE

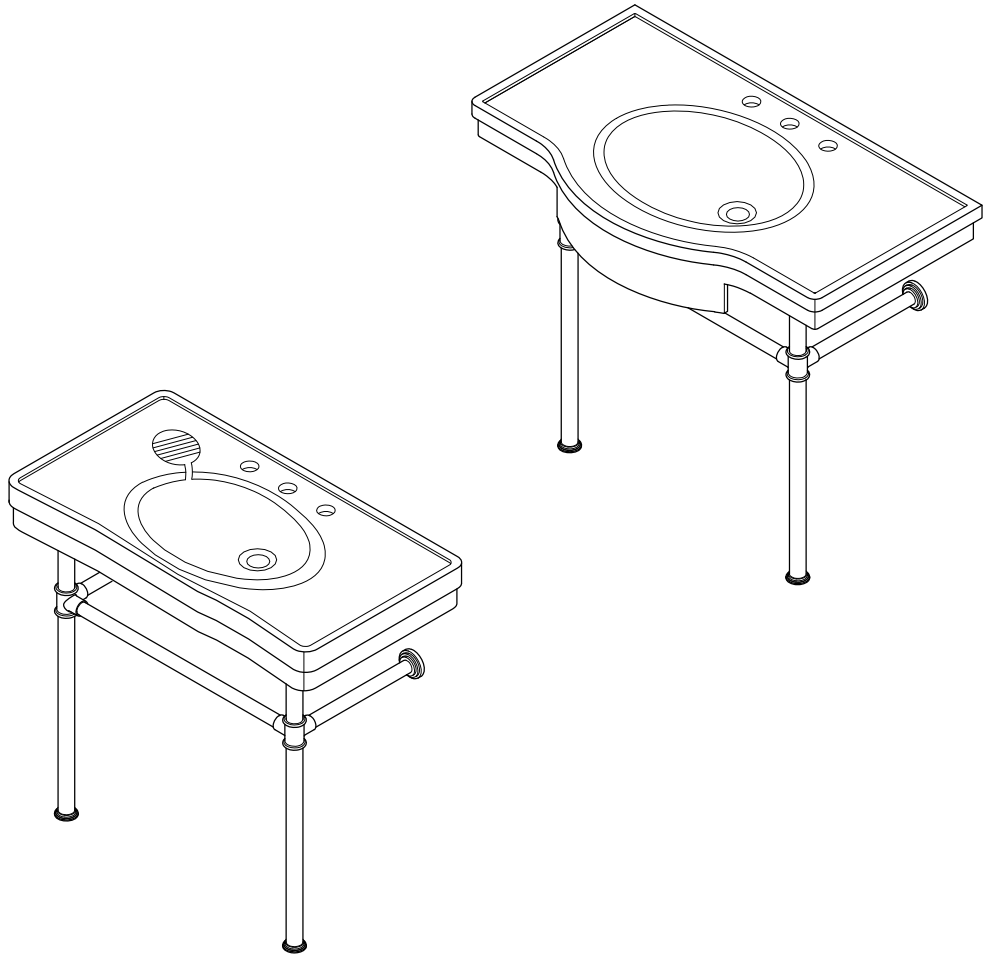

Parts:

Screw	Mounting Screw	Floor Pin
	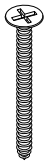	
4 Pcs	8 Pcs	2 Pcs

www.kingstonbrass.com

TOLL-FREE CUSTOMER SERVICE: 1-877-2-KBRASS
TECHNICAL SUPPORT E-mail: service@kingstonbrass.com
12775 Reservoir Street, Chino, CA 91710

⚠CAUTION

Failure to follow all installation directions may cause product to detach from the wall and cause serious injury

KINGSTON

FAUCETURE

Console Sink Legs
Installation Instructions

Before Installation :

1. Before beginning the installation of your console pedestal basin, it is important to identify the type of wall where the pedestal will be installed and prepare the installation location accordingly.
2. Install an anchoring brace in the wall prior to installing the drywall, this can be a 2" x 6" piece of wood that will fit between the two studs, then install drywall and finish as usual. Due to the excessive weight of this pedestal it should not be mounted on drywall unless it is properly secured to the anchoring brace.
3. For safety concern, make sure your sink has proper wall mounting parts or brackets to fix the sink on wall.
4. For maximum weight capacity, we recommend that you can use our bracket # VSPLBRKT as shown in the last page.
5. For higher installation height (34" & 36"), we recommend that you can use our extension-leg parts # VPBL31488* (3.5") or # VPBL51488* (5.5").

Installation Step :

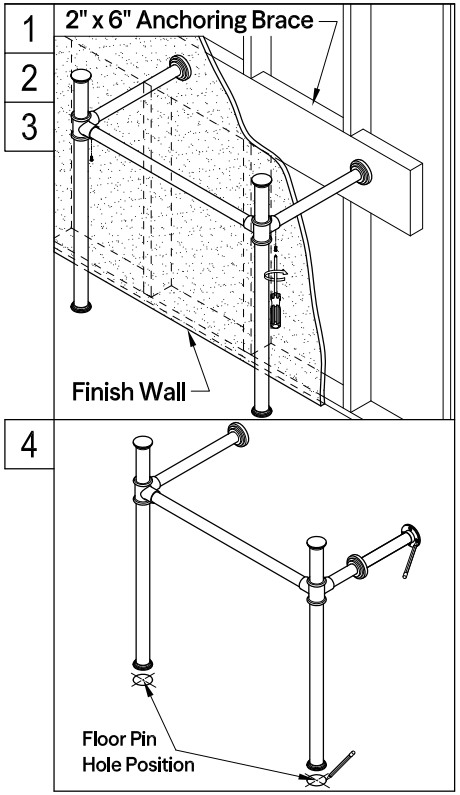

1. Join the two vertical leg supports by inserting the horizontal crossbar into the leg support tees, and secure by tightening screw from underneath.
2. Insert the two horizontal short arms (wall support arm) into the leg support tees, and secure by tightening screw from underneath.
3. Place the leg support assembly at the location where the console basin will be installed. Adjust to make sure the vertical legs are plumb and horizontal arms are level.
4. Use pencil to mark the locations of wall support flanges and floor pin holes. Remove the leg support assembly. If you want to fix the legs on the floor, drill pin holes Ø21/64" X 3/8" deep on the floor.

Tools Required

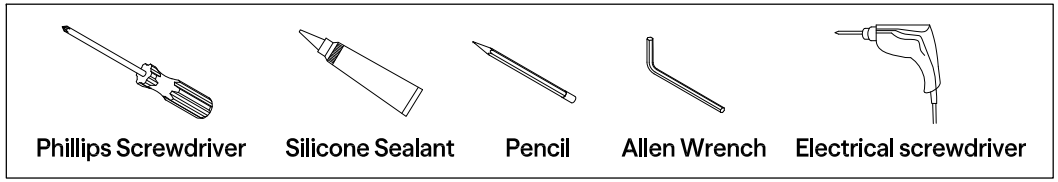

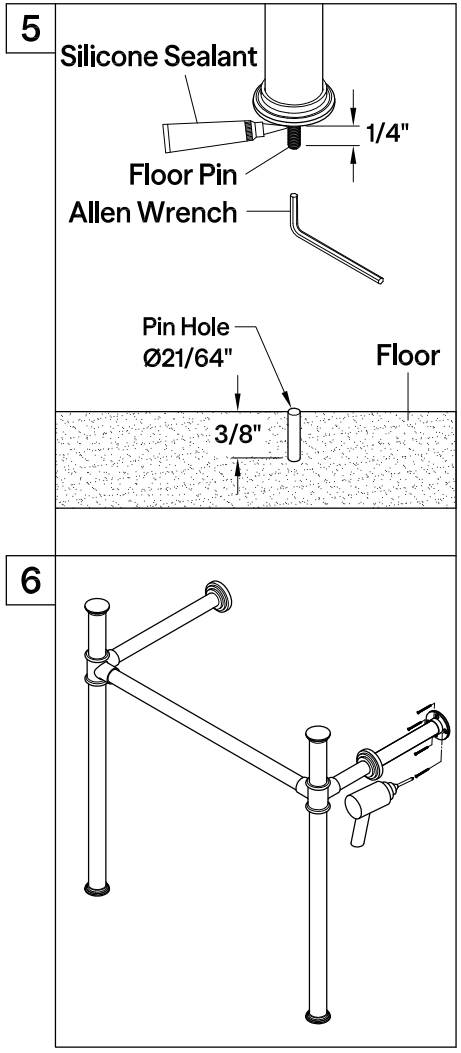

5. If you choose to fix the legs on the floor, apply silicone sealant on the threaded end of the floor pin and secure it into the bottom of legs with an Allen wrench. Make sure the floor pin protrude 1/4" from the bottom surface.

6. Move and adjust the position of the leg support assembly, so the two floor pins can completely go into the drilled holes on the floor.
Then secure the leg support assembly to the wall by tightening all the wood screws on the wall flanges.

©2025 LVC Kingston LLC. All Rights Reserved.
2025-05-D