FLEXSTEEL®

LAF Power Recliner with Power Headrest, Lumbar & Sound

#6

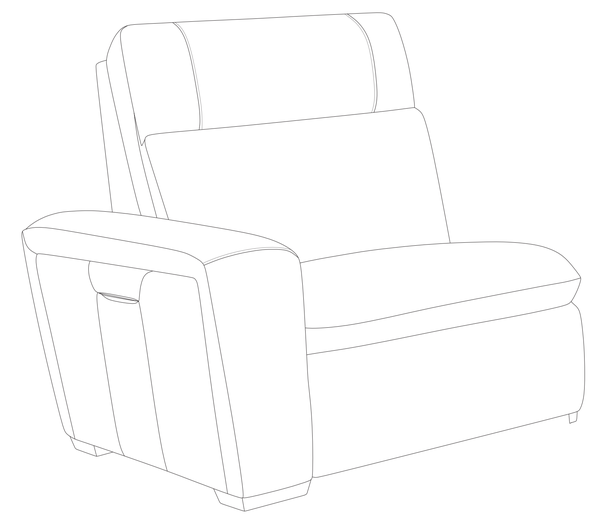

IMPORTANT NOTE

Read these instructions carefully and familiarize yourself with each procedure before assembling the furniture. Check that you have all the component parts and familiarize yourself with each part before proceeding.

Take all the fittings out of the plastic bag and separate them into groups. Ensure you have enough space to lay out all the parts before assembly. To prevent damage to the parts, we recommend that you assemble the unit on a soft, level surface.

Part List

A. Back
1 piece

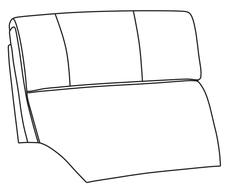

B. Seat
1 piece

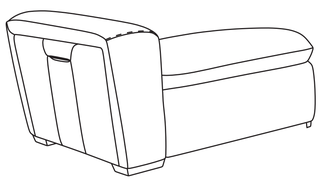

C. Transformer
2 pieces

D. AC Power Cable
2 pieces

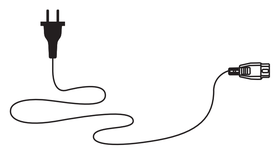

Assembly Instructions

STEP 1

Detach the Transformers (C) and the AC Power Cables (D) from the bottom of the Seat (B). (See Figure 1.)

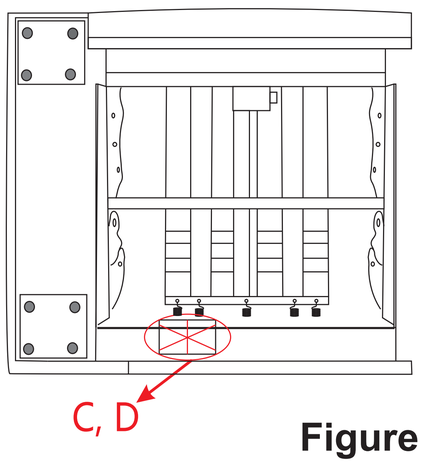

Figure 1

STEP 2

Lay the Back (A) face down on the Seat (B).
Zip the fabric on the bottom of the Back (A) with the back of the Seat (B). (See Figure 2.)

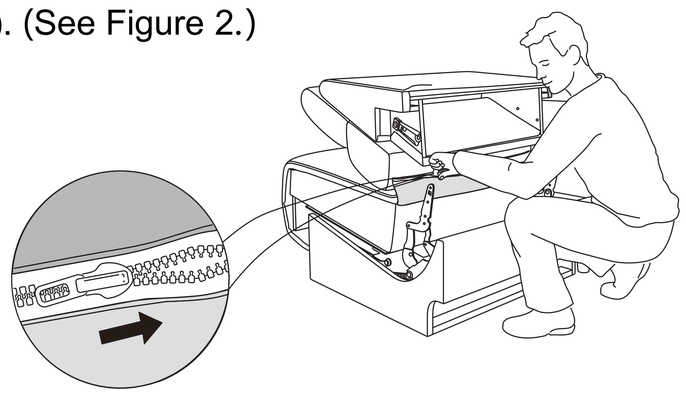

Figure 2

STEP 3

Connect the two Speaker cables, Transducer, Headrest and Lumbar cables between the Back (A) and the Seat (B). Ensure to match the correct colored Speaker cables to each other, red to red and white to white. (See Figure 3.)

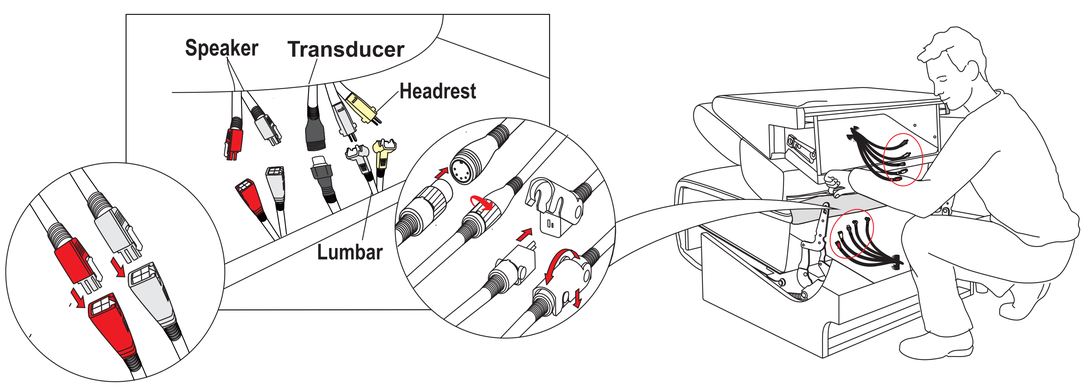

Figure 3

STEP 4

Attach the Back (A) to the Seat (B). Ensure the latches fit well. (See Figure 4.)

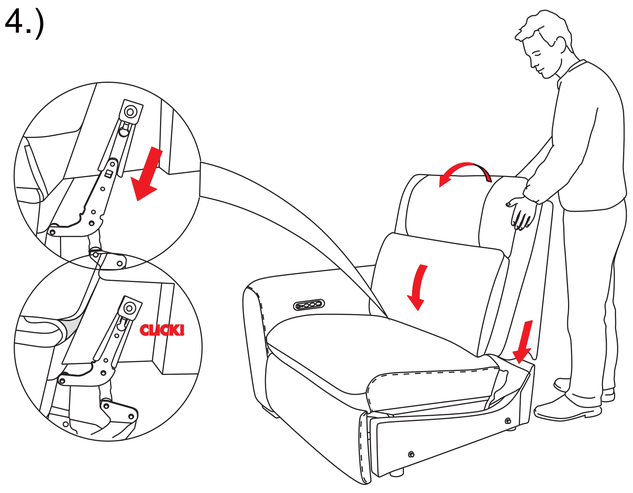

Figure 4

STEP 5

Begin sectional connection by placing the piece #1 in desired location in the room. Then start sectional connection by placing #2 into piece #1. Continue sectional connection with piece #3 thru #6 following the same method described above. (See Figure 5.)

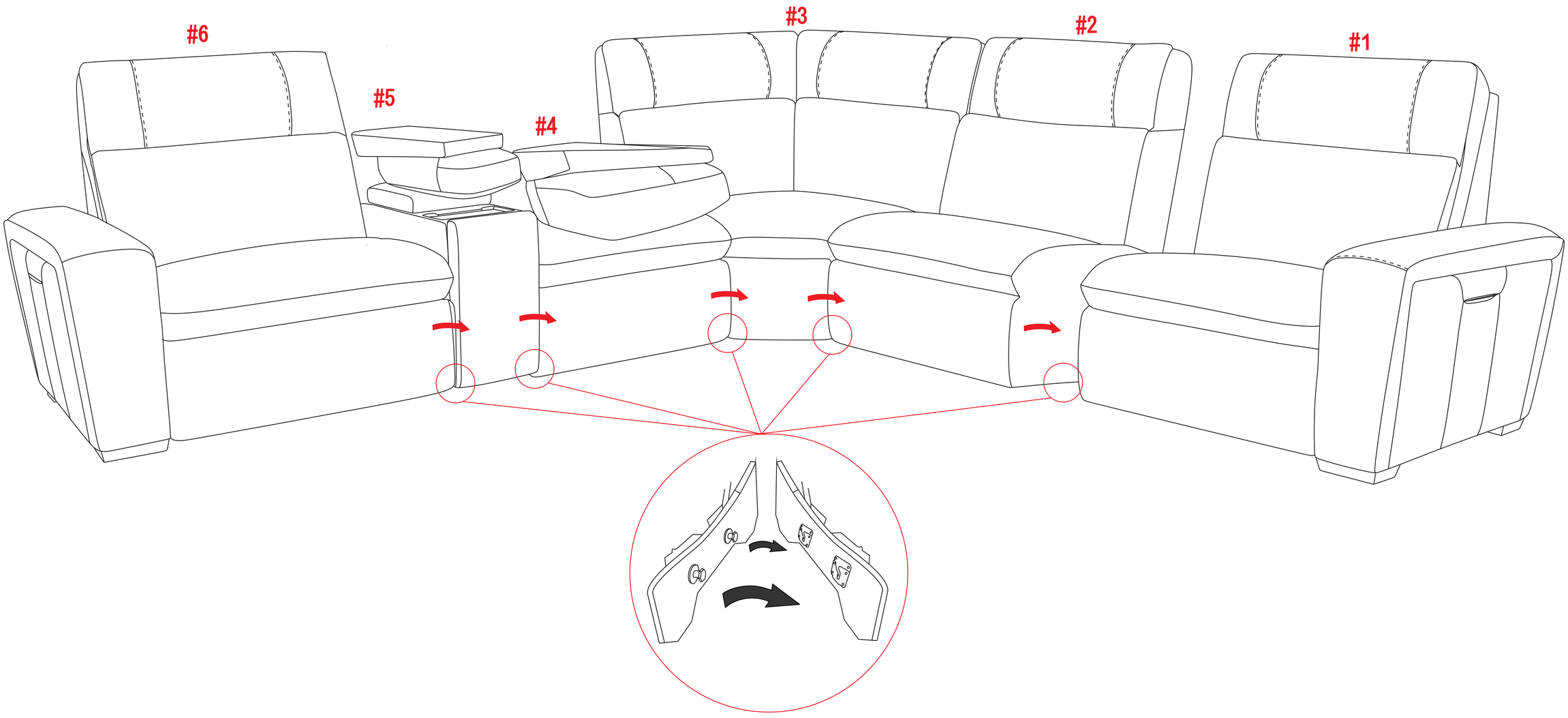

Figure 5

STEP 6

Connect the two Transducer cables, two Speaker L and R cables, and Wireless charge cable between piece #4 and #5. Ensure to match the correct colored Speaker cables to each other, red to red and white to white. (See Figure 6.)

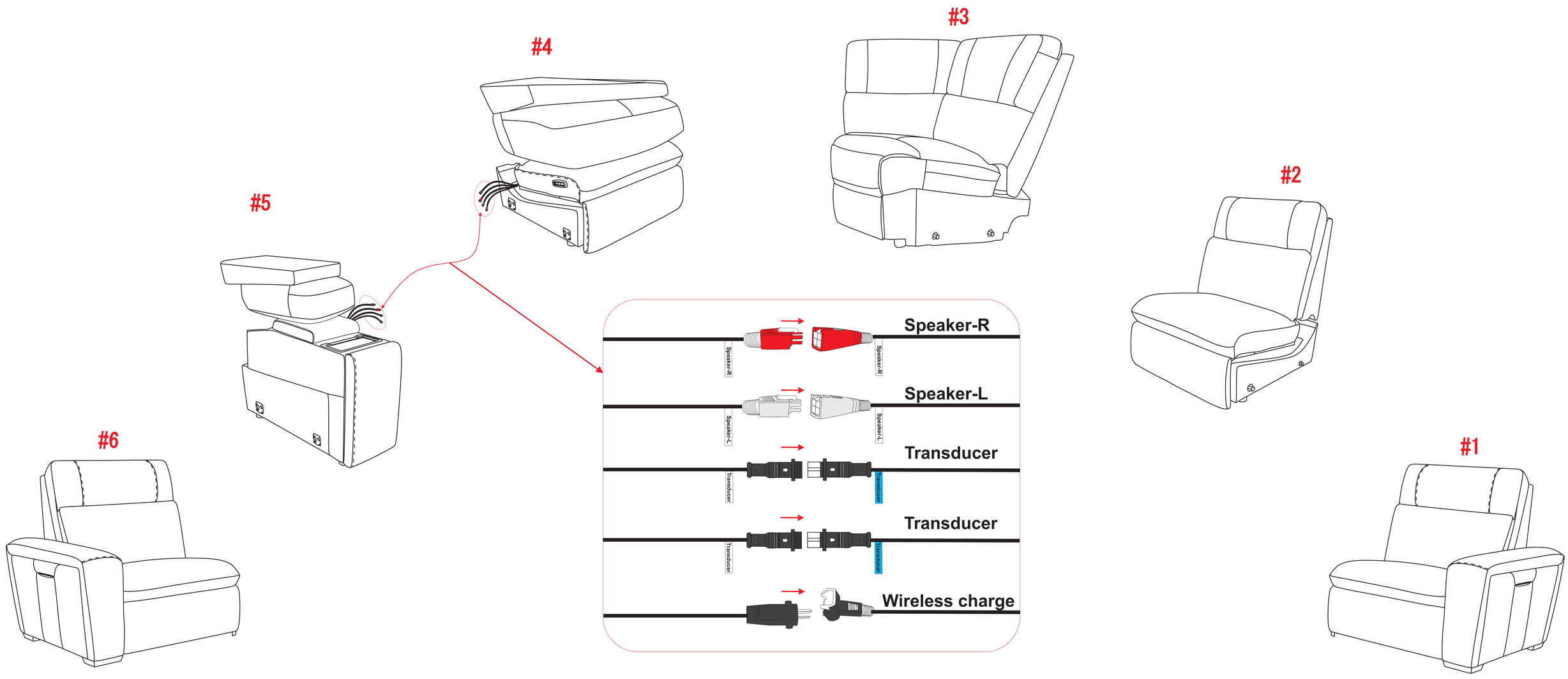

Figure 6

STEP 7

After connecting all cables between the sectional pieces, neatly secure the cables behind each seat using the provided Velcro straps. (See Figure 7.)

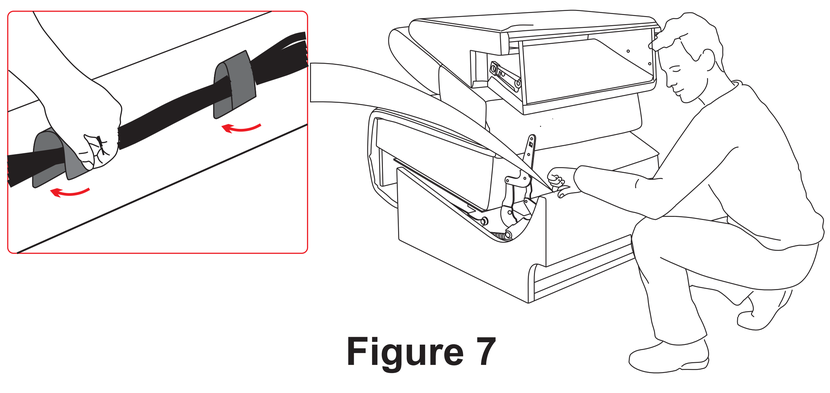

Figure 7

STEP 8

Attach the Back to the Seat for pieces #4, #5. Ensure the latches fit well. (See Figure 8.)

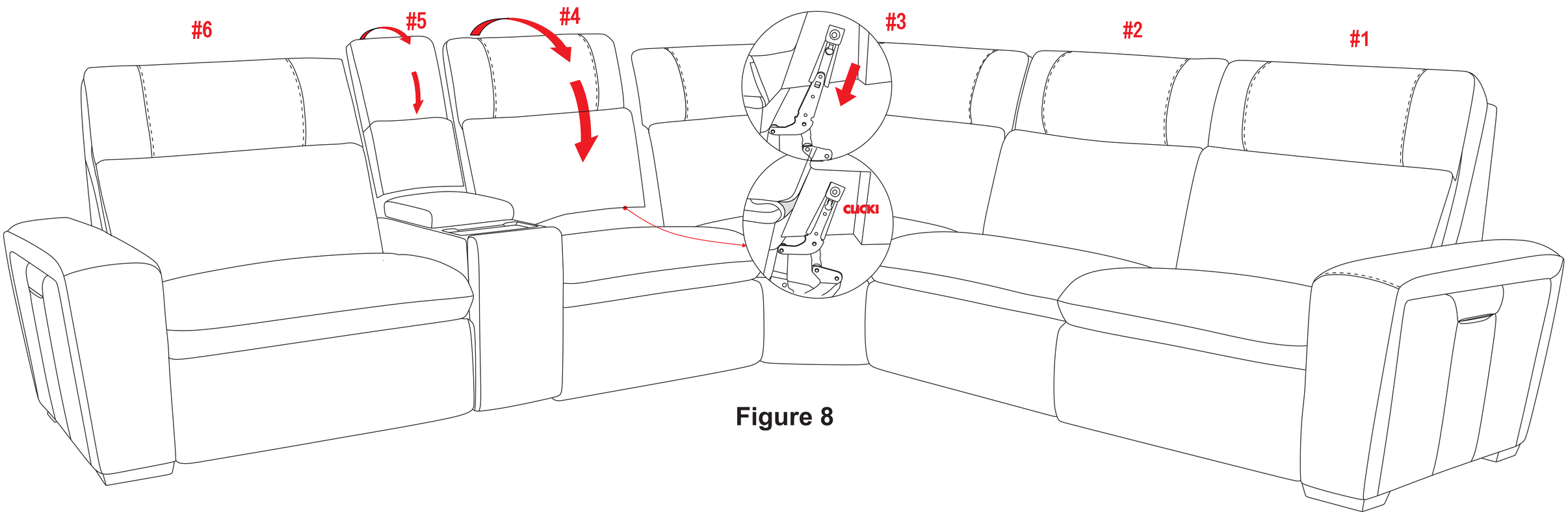

Figure 8

STEP 9

Connect the power cables on the back of the seats of pieces #1, #4, #5 and #6 each to a Transformer.
Connect an AC Power Cable to each Transformer, and plug the AC Power Cables into nearby outlets. (See Figure 9.)

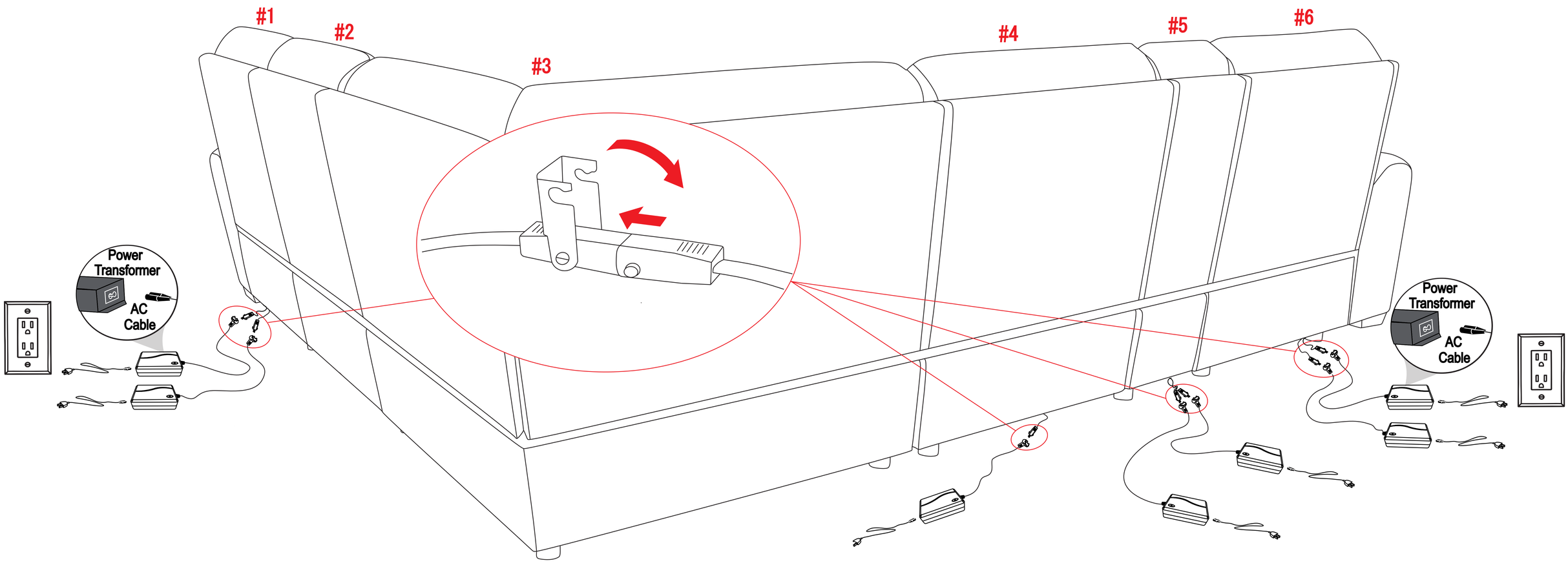

Figure 9

Disassembly Instructions

Unzip the zipper between the Back (A) and the Seat (B). Pull up the spring leaf in bracket,
then lift Back (A) up and lay it face down on the Seat (B). Then disconnect all the cables. (See Figure 10.)

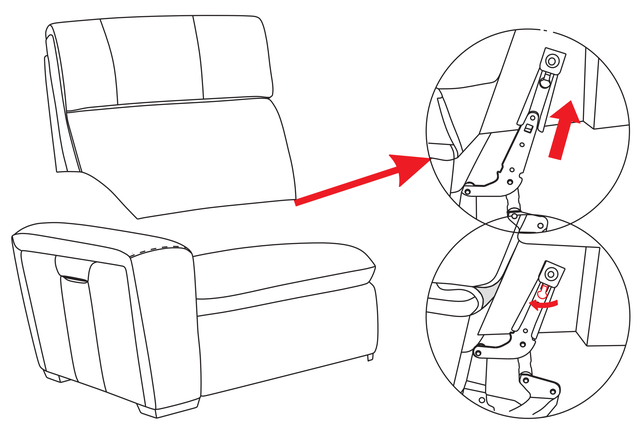

Figure 10

Hidden Cupholder And Storage

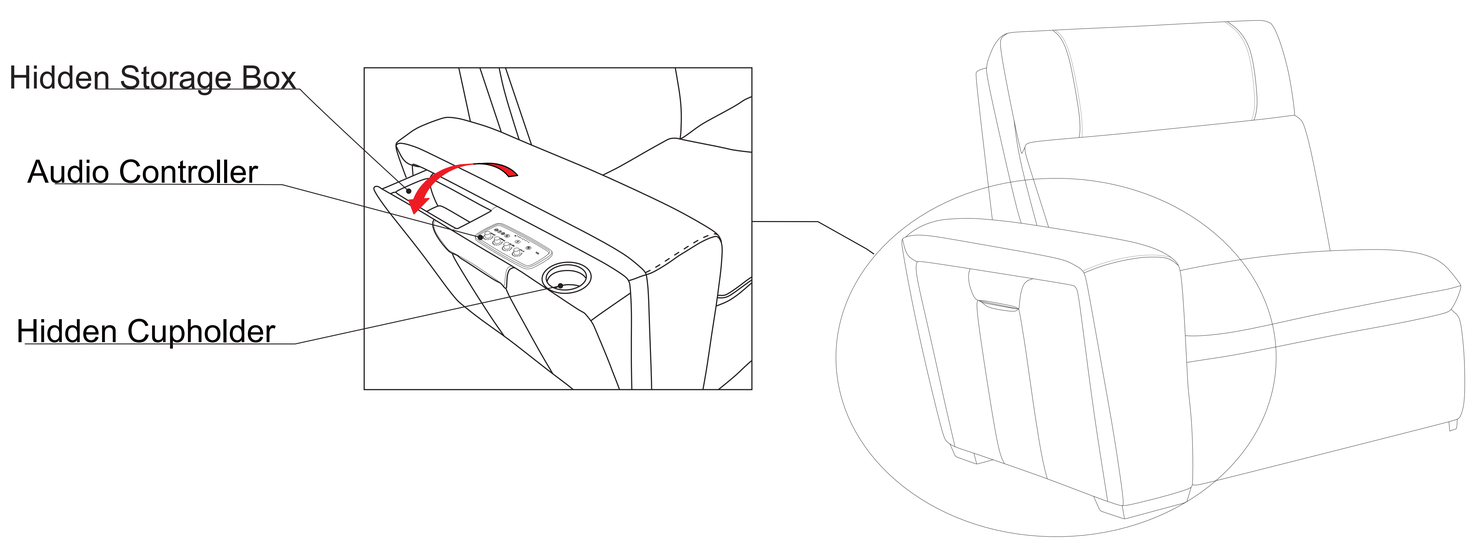

IMPORTANT NOTE

- To avoid any risk of suffocation to children or pets, dispose of all plastic bags immediately.
- To ensure proper performance, occasionally check for loose hardware and tighten as needed.
- If the reclining functions are not working properly, check for loose cable connections before contacting the retailer.