Important :

Before you begin Installation please read the following instructions, observe all local plumbing and building codes.

- Check area where tub will be installed to ensure that it is leveled and structurally sound.
- Please unwrap the tub and check it carefully for any damage that may have occurred during transportation.
- Check that all parts are included.
- If you have any missing parts, damage is found or have any questions regarding the installation process contact customer service at (877)-252-7277.
- Store bathtub in a safe place until you begin installation to avoid damage to the tub's surface.
- No claims for damages or blemishes will be accepted once the tub has been installed.
- We recommend that the installation of this tub be done by a qualified licensed professional.
- Because of its weight and volume we recommend that the installation of this tub be done with the help of at least one other person, a fall even what may seem like a minor one may result in cracking of the tub, moving straps and rubber gripped gloves are recommended.
- These Installation instructions do not include details of waste connections, the final details should be determined by your contractor

KINGSTON

AQUA EDEN

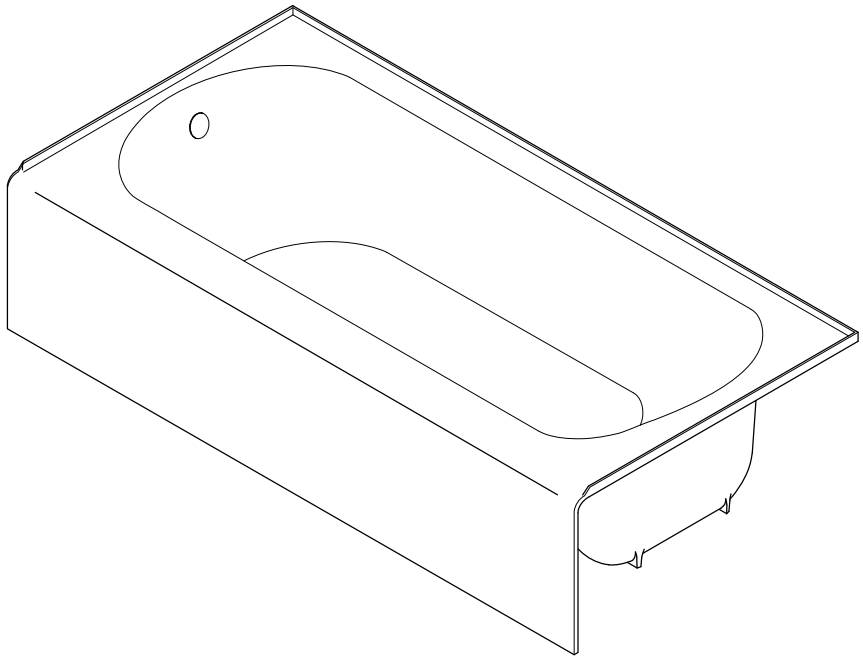

www.kingstonbrass.com

TOLL-FREE CUSTOMER SERVICE: 1-877-2-KBRASS
TECHNICAL SUPPORT E-mail: service@kingstonbrass.com
12775 Reservoir Street, Chino, CA 91710

NOTICE

Failure to follow all directions may cause leaks which may result in water damage



⚠WARNING

Lifting hazard.

Single person lift could cause injury.
Use assistance when moving or lifting.

KINGSTON

AQUA EDEN

Cast Iron Alcove Tub without Drain Installation Instructions

Important points to remember before beginning installation :

1. Verify that floor is structurally sound and level, floor must be able to support the full load of the tub including water to the overflow level.
2. Provide access to all plumbing connections.
3. Observe all local building and plumbing codes.

Tools Required

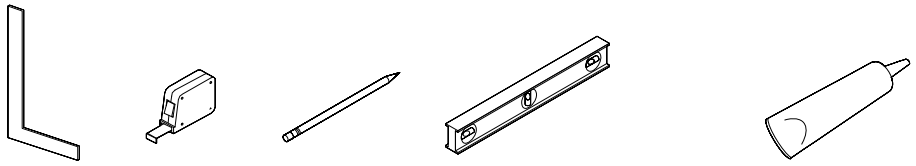

Conventional Woodworking Tools & Materials

100% Silicone Sealant

1

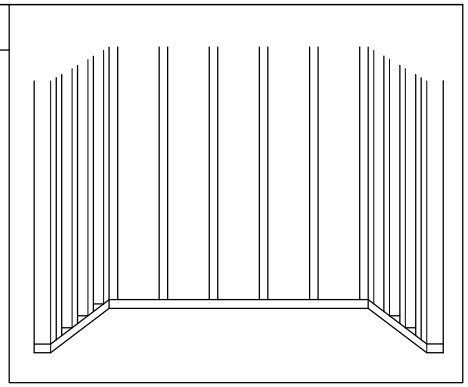

1. Prepare area by framing the area where the tub will be installed, make sure to check that everything is square, plumb and level.

2

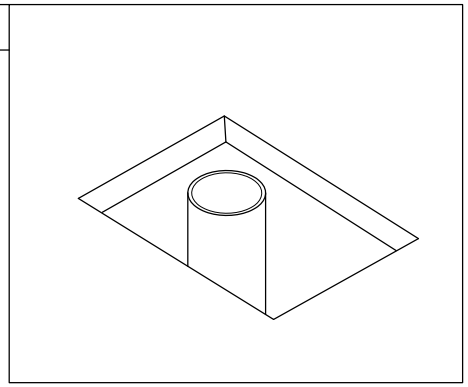

2. Determine the tub drain location, cut an opening; opening should be a minimum of 6" x 15".

3

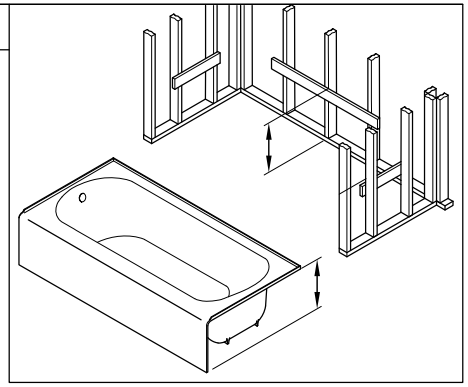

3. Measure the distance from the floor to the underside of the tub deck, using this measurement install 2" x 6" lumber stringers on all 3 sides, top surface of the stringer should be at the height of the underside of the tub deck.

4

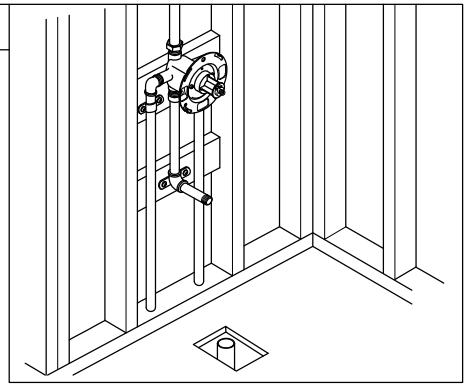

4. Partially preinstall the waste and overflow.

5

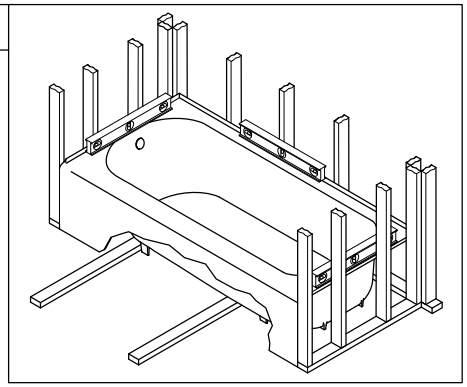

5. Using two pieces of lumber placed under the tub to protect the floor, slide tub into place, remove the 2 pieces of wood and lower tub into place, using metal shims level tub. It may be necessary to move tub in and out if no access is available from the back or sides in order to install shims.

6

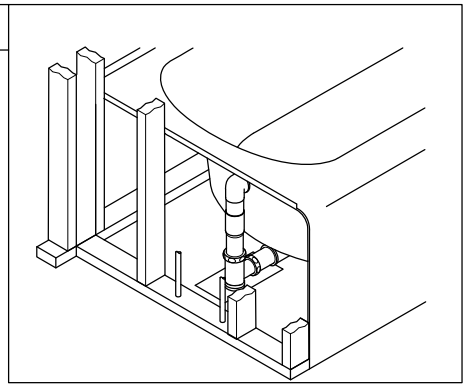

6. Connect the tub drain to your drain system.

7

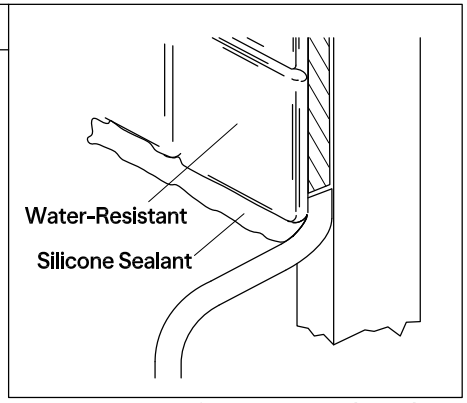

7. Install water resistant gypsum board and finish surface material (tile, stone) and seal all edges with silicone caulking to prevent water damage.

©2025 LVC Kingston LLC. All Rights Reserved.
2026-05-TL

Cleaning

Clean with a damp cloth only.
Avoid using metal or abrasive polishes.