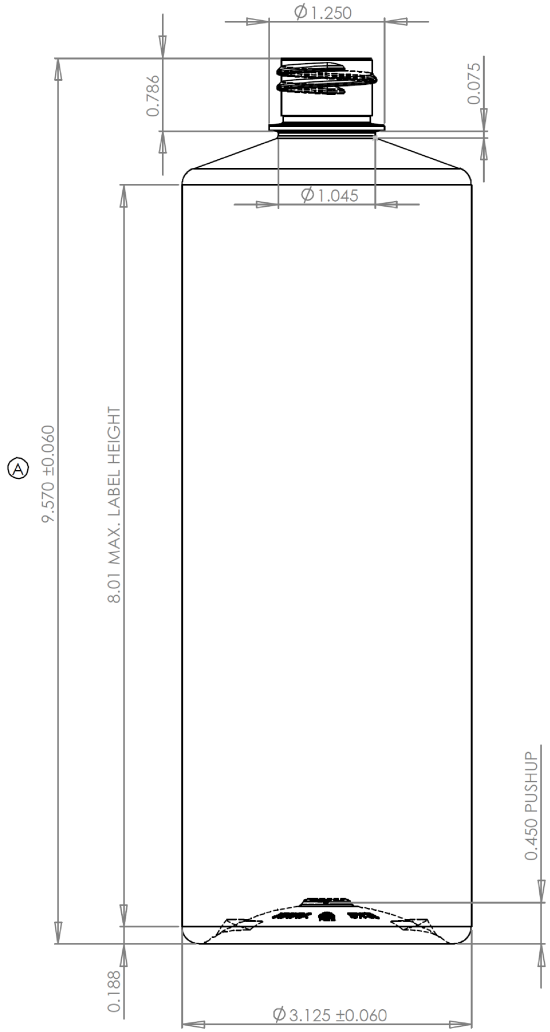

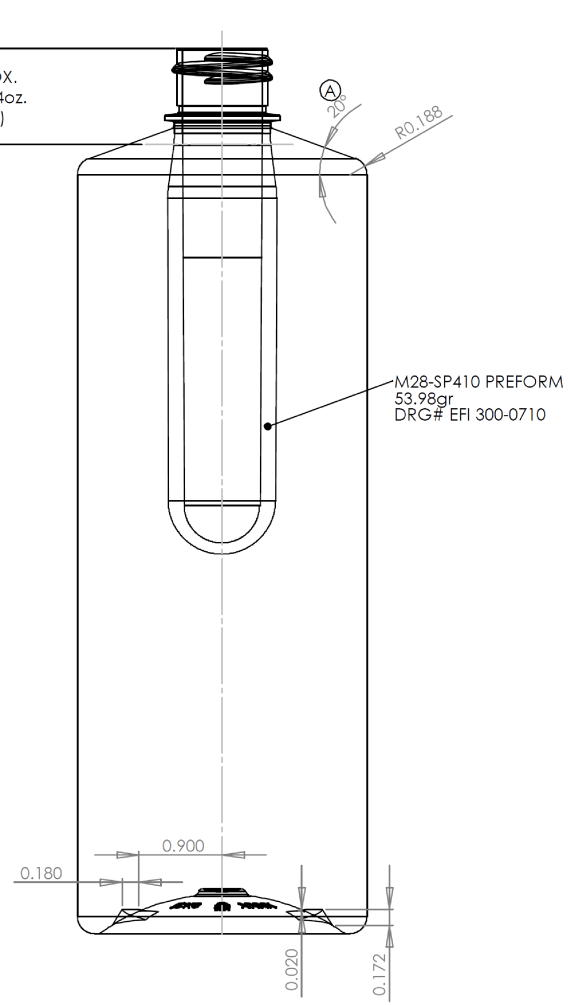

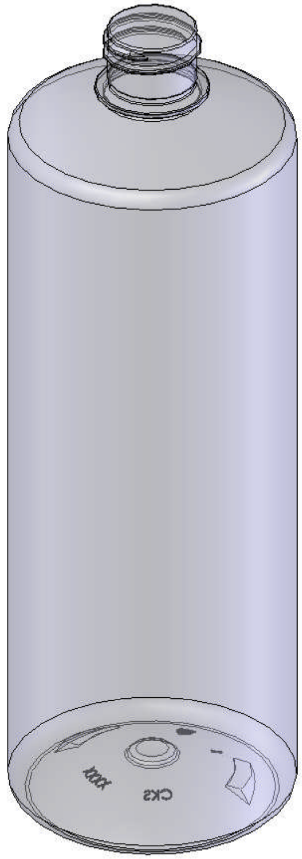

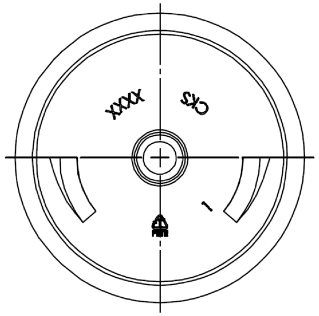

NOTES

1. OVERFLOW CAPACITY - 1018 ± 15 ml
2. WEIGHT - 53.98 grams

DISCLAIMER

THIS INFORMATION IS PROVIDED AS A GENERAL GUIDE, INCLUDING DIMENSIONS. IT IS THE CUSTOMER'S RESPONSIBILITIES TO SELECT THE PROPER CONTAINER FOR PRODUCT AND APPLICATION COMPATIBILITY.

DISTRIBUTED BY: Pipeline Packaging

REF NO.: DWG10448

DESCRIPTION: 32 oz PET Cylinder, 28-410