Specifications

Eaton SB220203YZ

Catalog Number: SB220203YZ

Eaton auxiliary support channel, Steel, Pre-assembled channel, spacer, and hardware included, 3" length, Yellow zinc, 2" X 9/16" Support channel

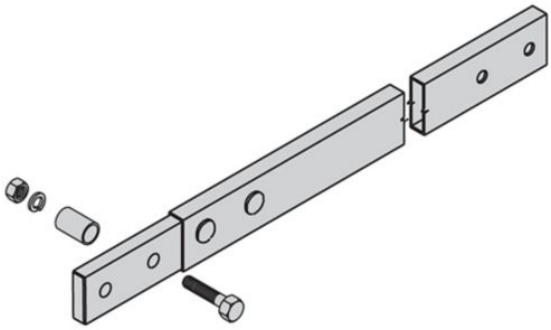

Photo is representative

General specifications

Product Name	**Catalog Number**
Eaton auxiliary support channel	SB220203YZ
UPC	**Product Length/Depth**
799038019527	3 in
Product Height	**Product Width**
0.56 in	2 in
Product Weight	**Certifications**
6.5 lb	Not Applicable

Powering Business Worldwide

Product specifications

Finish

Yellow zinc chromate

Material

Steel

Model

2" X 9/16" support channel

Resources

Catalogs

auxillary supports

Flyers

B-Line series product line overview

Specifications and datasheets

Eaton Specification Sheet - SB220203YZ

Eaton Corporation plc
Eaton House
30 Pembroke Road
Dublin 4, Ireland
Eaton.com

© 2025 Eaton. All Rights Reserved.

Eaton is a registered trademark.

All other trademarks are property of their respective owners.

Eaton.com/socialmedia