# ASSEMBLY INSTRUCTION

## 70"W TV STAND

**1** Top Panel

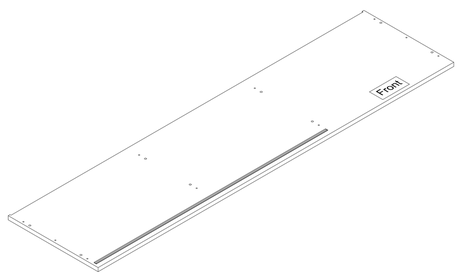


1pc

**2** Left Side Panel

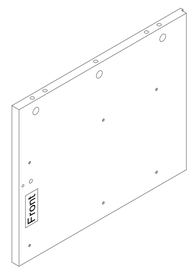


1pc

**3** Right Side Panel

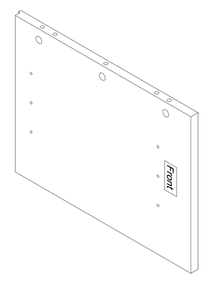


1pc

**4** Bottom Panel

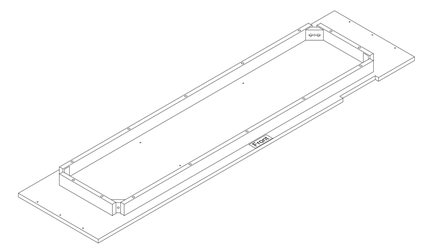


1pc

**5** Left Partition

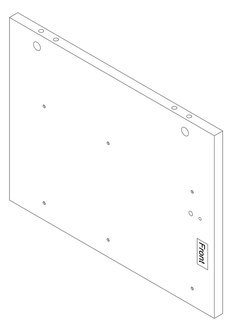


1pc

**6** Right Partition

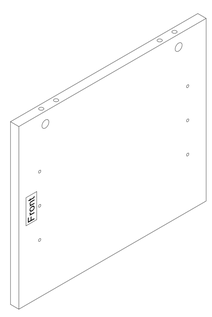


1pc

**7** Leg

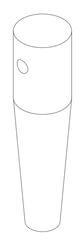

1pc

**8** Center Bar

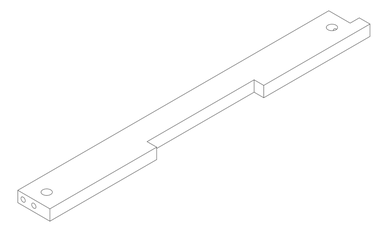

1pc

**9** Shelving

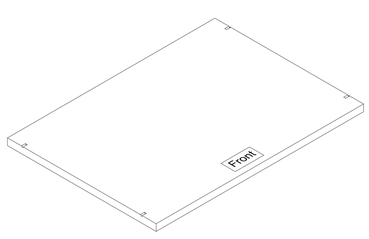


1pc

**10** Door

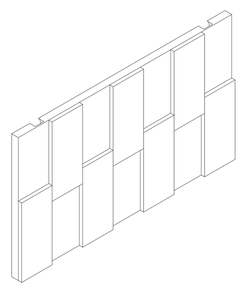

1pc

**11** Back Plywood

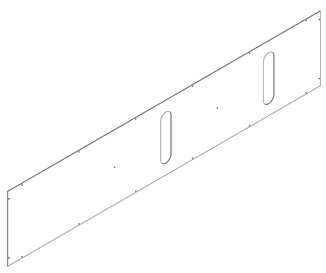

4pcs

**101** Drawer Front

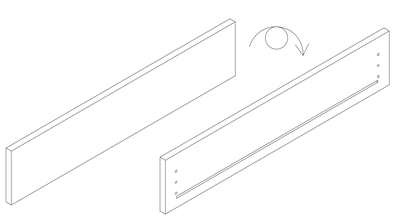

1pc

**102** Left Drawer Side

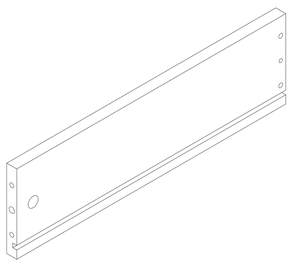

2pcs

**103** Drawer Back

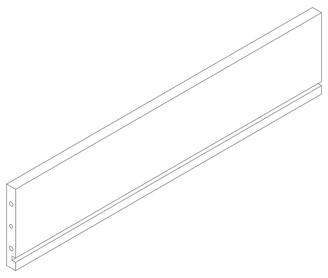

2pcs

**104** Drawer Base

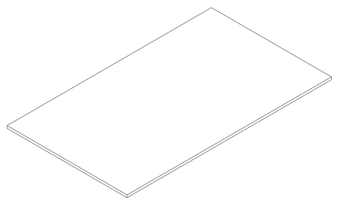

2pcs

**105** Right Drawer Side

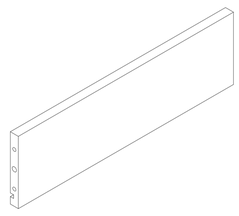

2pcs

**A** Screw
M3 x 16mm

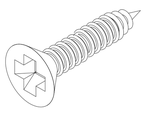

40pcs

**B** Screw
M4 x 38mm

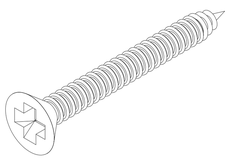

10pcs

**C** Dowel
M8 x 35mm

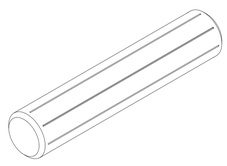

18pcs

**D** Cam Lock &
Cam Bolt
15 x 12mm /
5 x 25mm

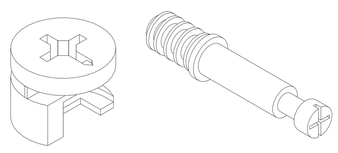

20sets

**E** Dowel
M6 x 30mm

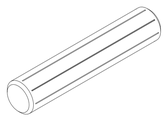

16pcs

**F** Runner
400mm

2sets

**G** Cam Lock Cover
17 x 5mm

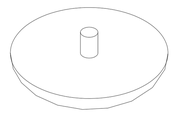

20pcs

**H** Allen Key
M4

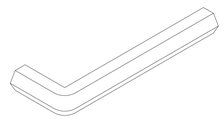

1pc

**I** Flat Washer
M6

4pcs

**J** Spring Washer
M6

4pcs

**K** JCBC Screw
M6 x 45mm

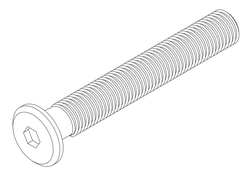

4pcs

**L** Shelving Support
M5 x 16mm

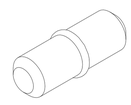

8pcs

**M** Panhead Screw
M4 x 16mm-Black

18pcs

**N** Sliding Roller

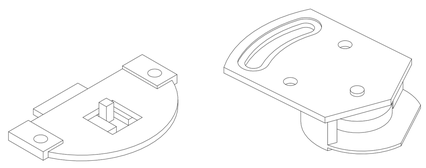

4sets

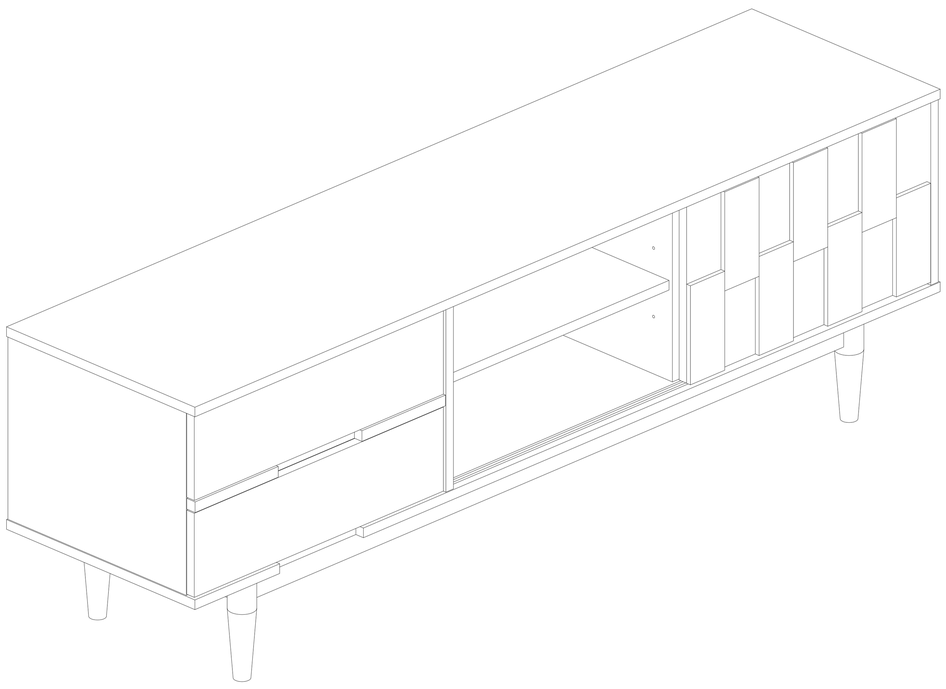

These pages list all the contents included in the box. Please take the time to identify the hardware as well as the individual components to this product. As you unpack and prepare for assembly, place the contents on a carpeted or padded area to protect them from damage.

## 1 Attach Cam Bolt (D) to Top Panel (1).

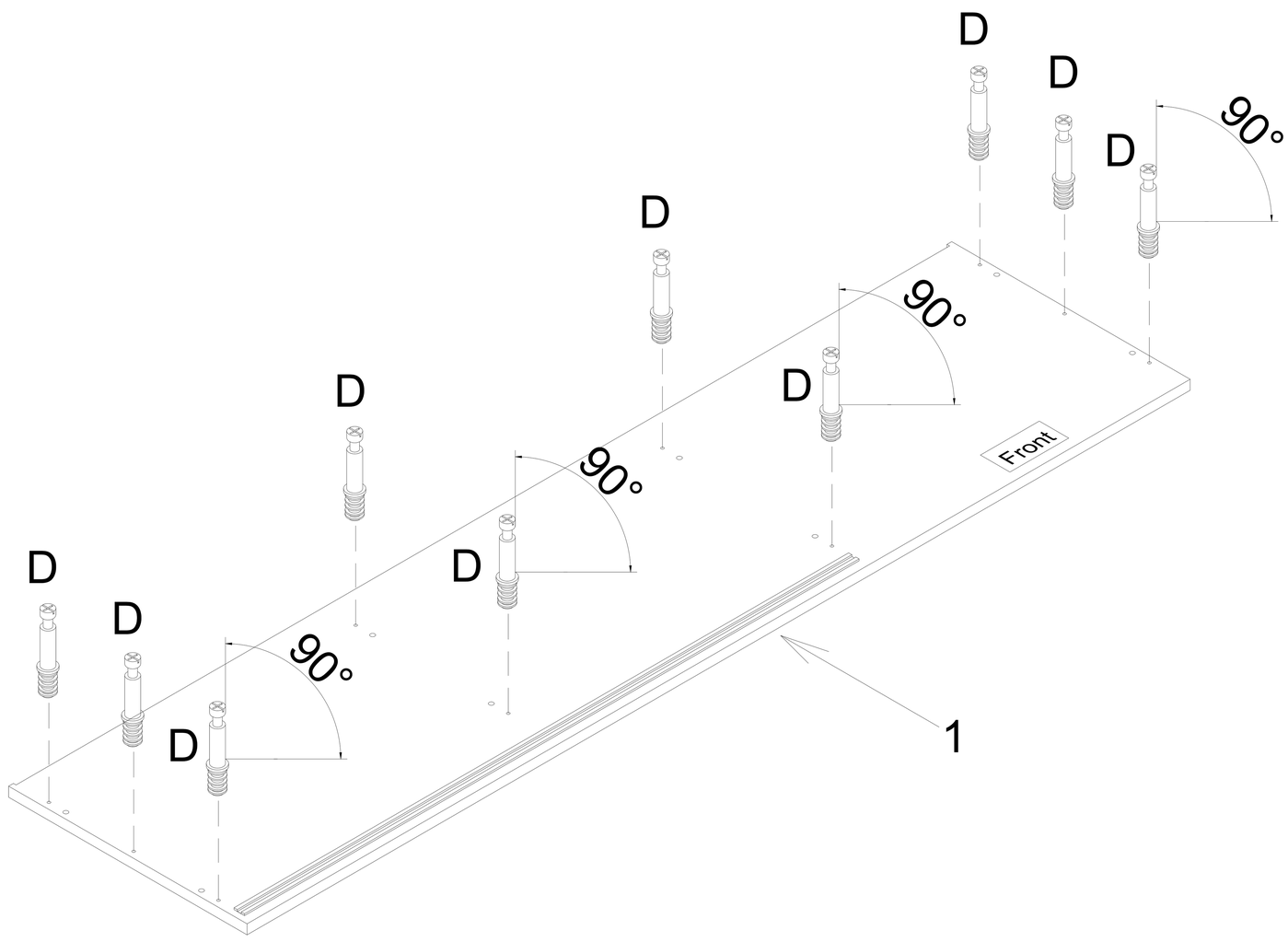


## 2 Attach Dowel (C) and Cam Lock & Cam Bolt (D) to Left & Right Side Panel (2 & 3).

NOTE : - Make sure arrows on each Cam Lock (D) points towards nearest edge with holes.

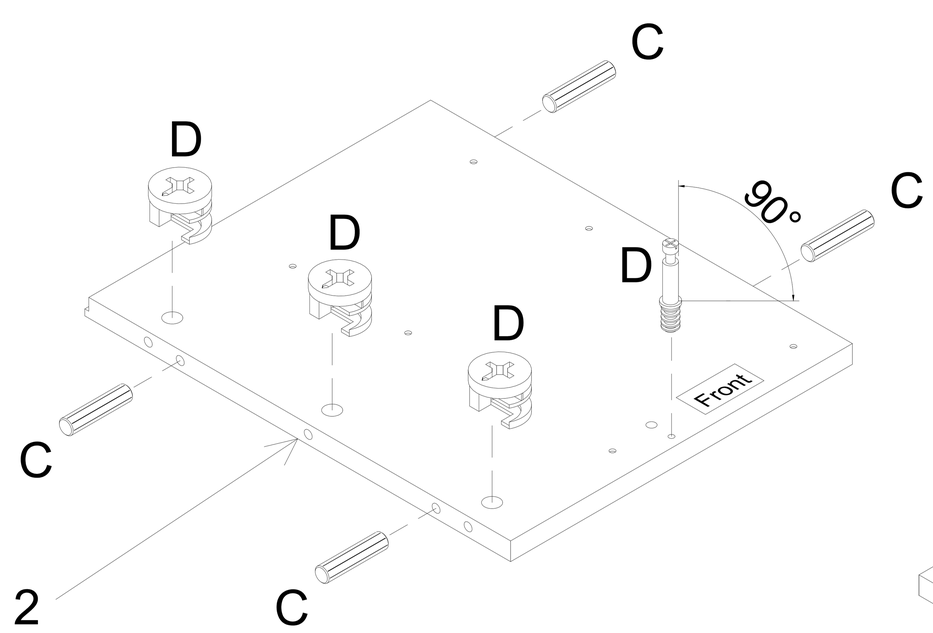


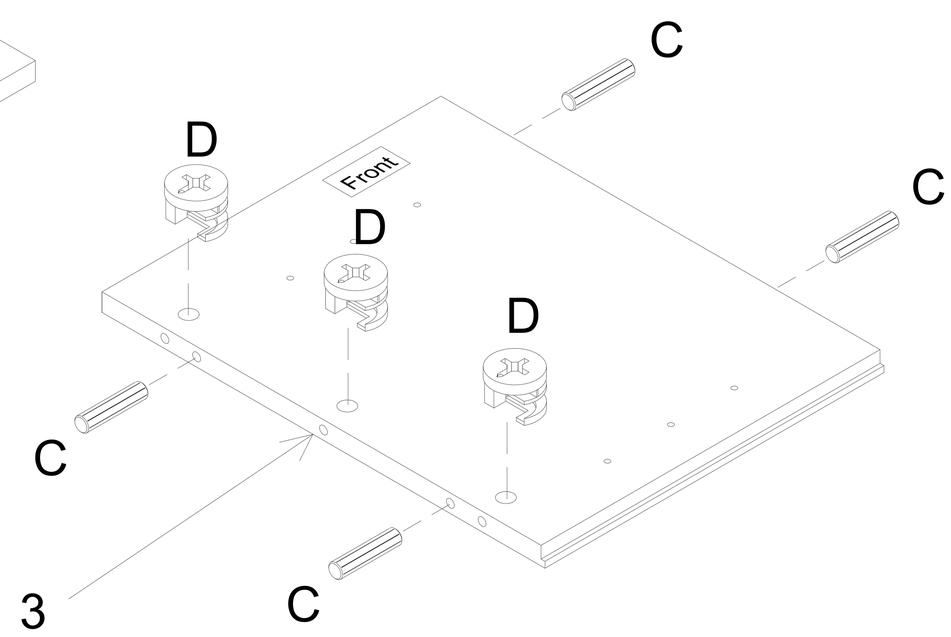

## 3 Attach Runner (F) to Left Side Panel (2) and secure with Screw (A).

NOTE : - Runner roller should be towards the front of the panel.
- Screw (A) should be assembled from the front of the runner. Start from $A^1$, $A^2$ then $A^3$.
- Make sure the Screw (A) are installed vertically without slant to ensure screw sits properly in the hole.

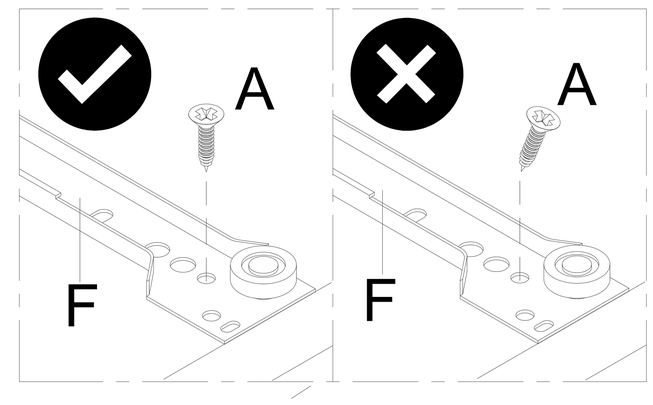


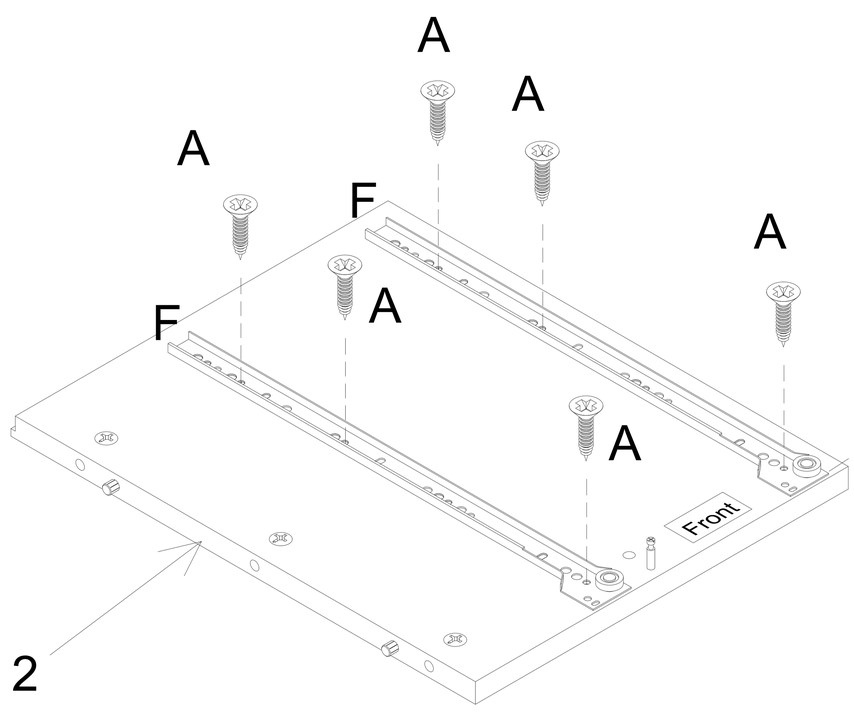


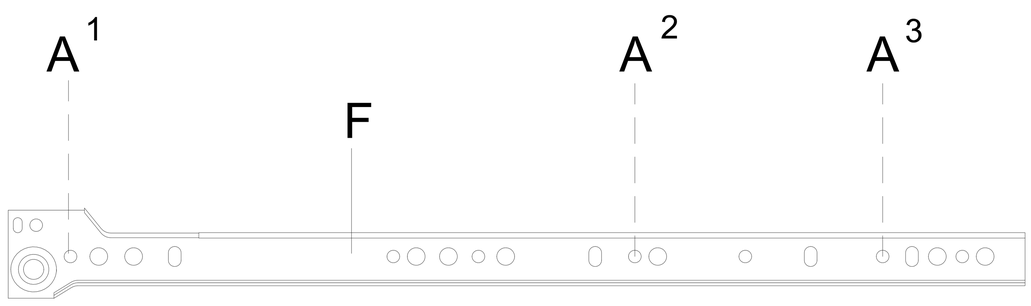


## 4 Attach Dowel (C) and Cam Lock (D) to Left & Right Partition (5 & 6).

NOTE : - Make sure arrows on each Cam Lock (D) points towards nearest edge with holes.

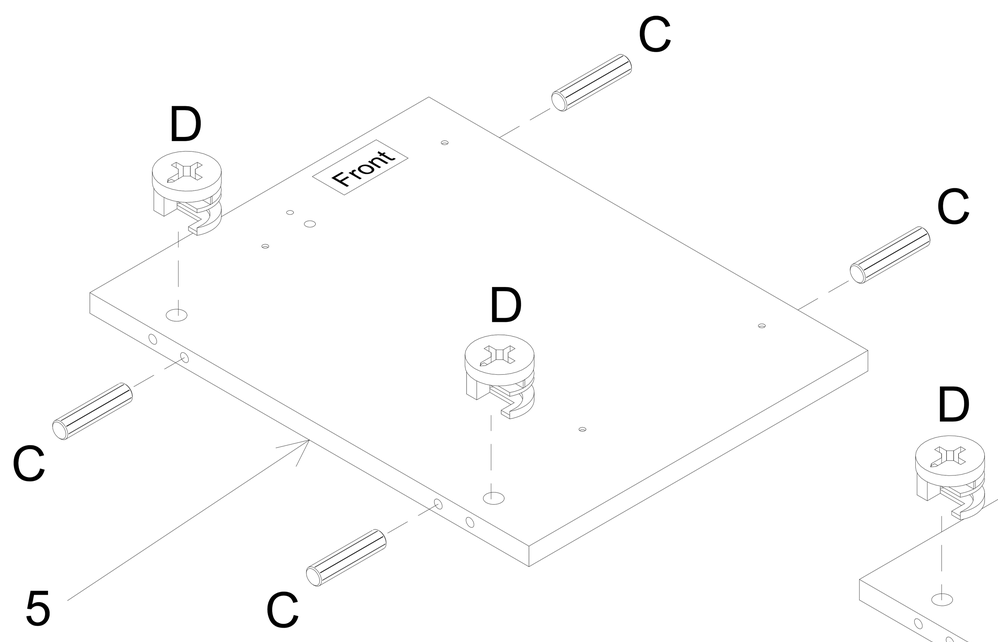


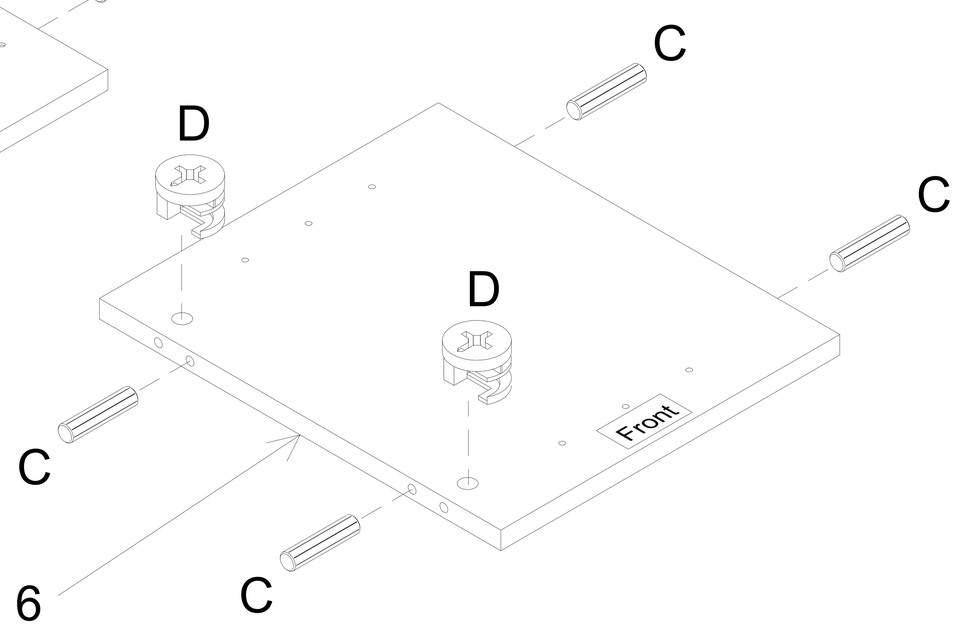

## 5 Attach Runner (F) to Left Partition (5) and secure with Screw (A). Attach Cam Bolt (D) to Left Partition (5).

NOTE : - Runner roller should be towards the front of the panel.
- Screw (A) should be assembled from the front of the runner. Start from $A^1$, $A^2$ then $A^3$.
- Make sure the Screw (A) are installed vertically without slant to ensure screw sits properly in the hole.

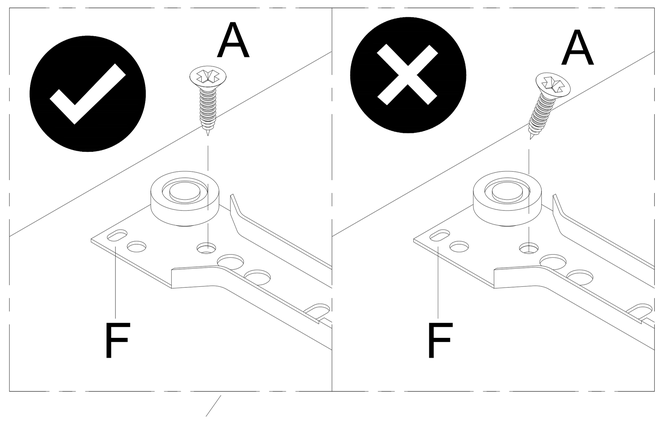


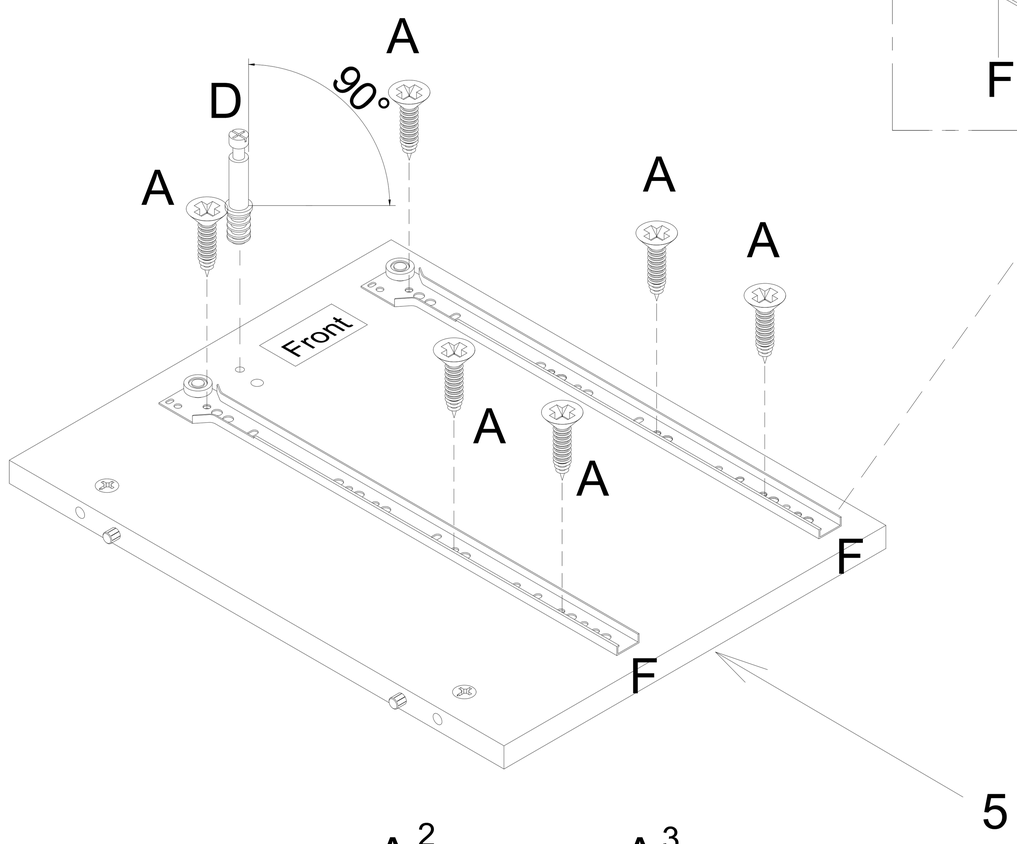


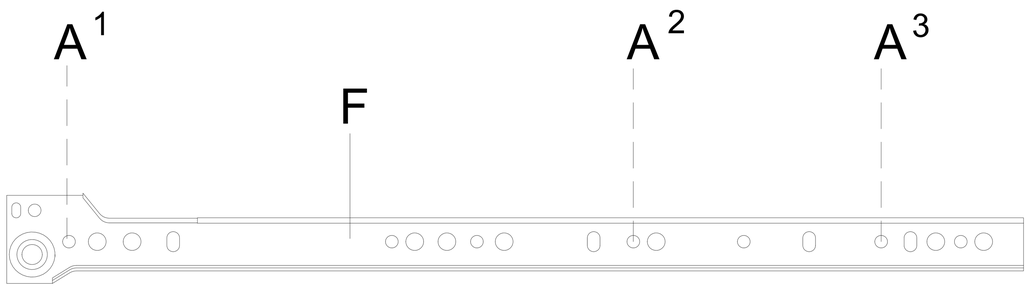


## 6 Attach Dowel (C) and Cam Lock (D) to Center Bar (8).

NOTE : - Make sure arrows on each Cam Lock (D) points towards nearest edge with holes.

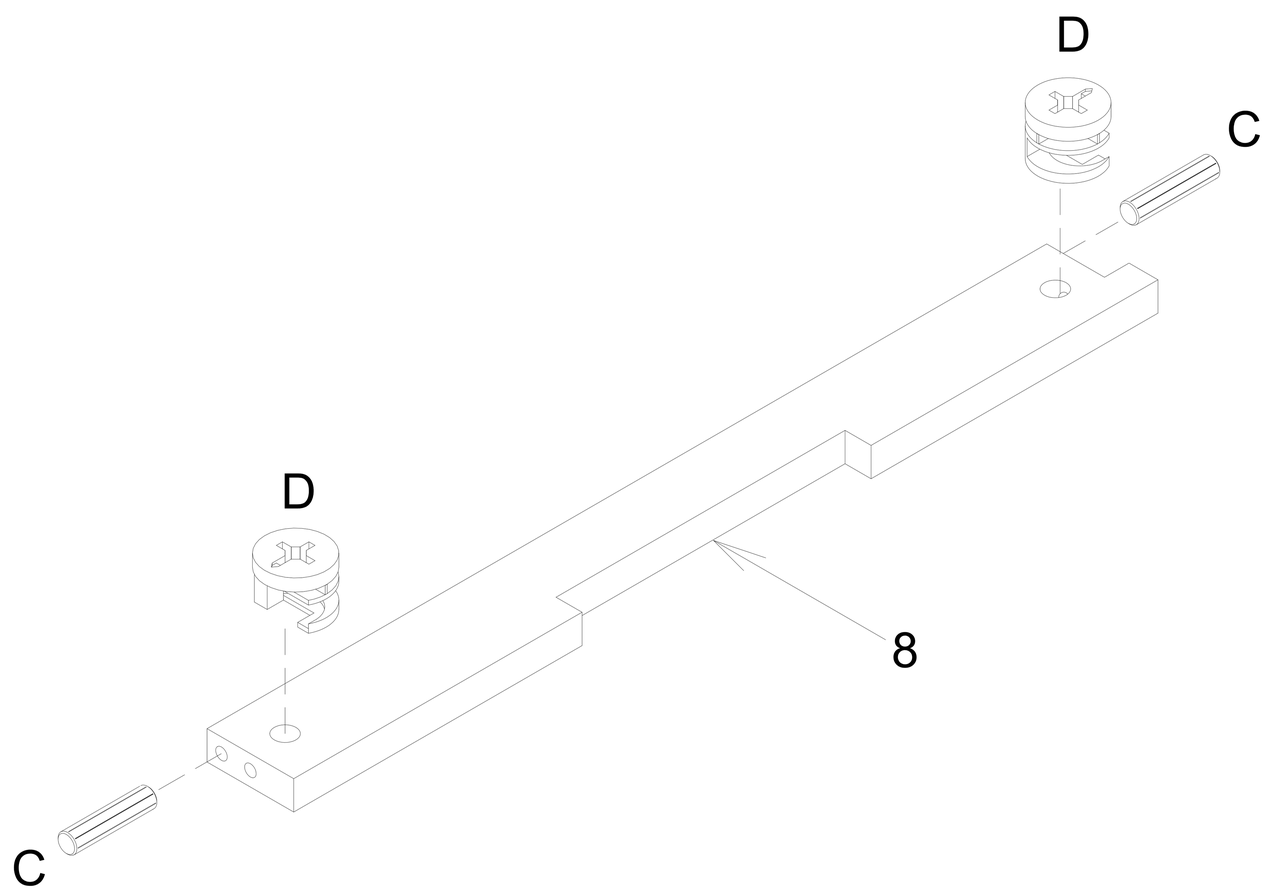

## 7 Attach Sliding Roller (N) to Door (10) and secure with Screw (A).

NOTE : - Do not over tighten the Screw (A).

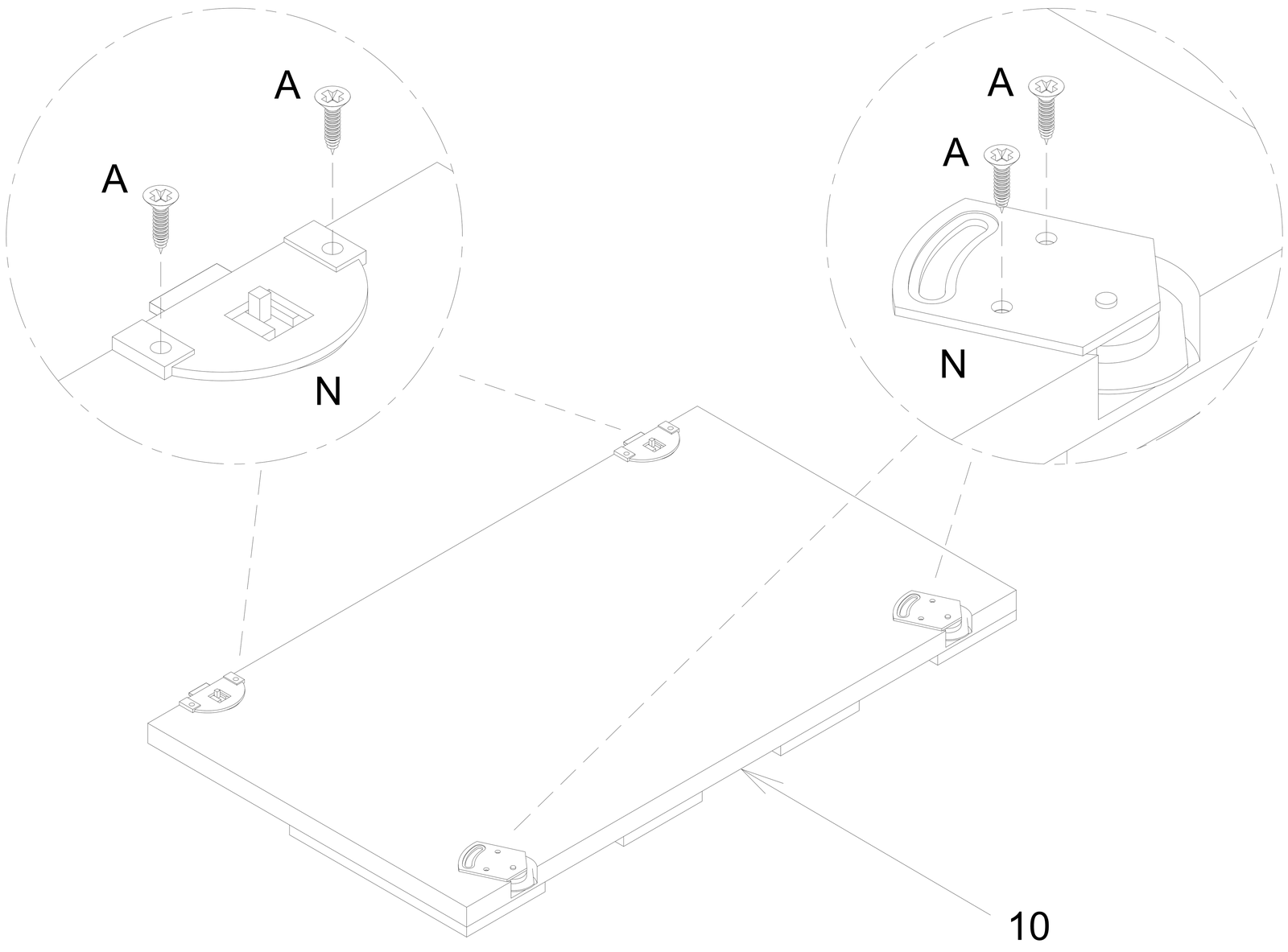


## 8 Attach Leg (7) to Bottom Panel (4) and secure with Flat Washer (I), Spring Washer (J) and JCBC Screw (K), and tighten with Allen Key (H) clockwise.

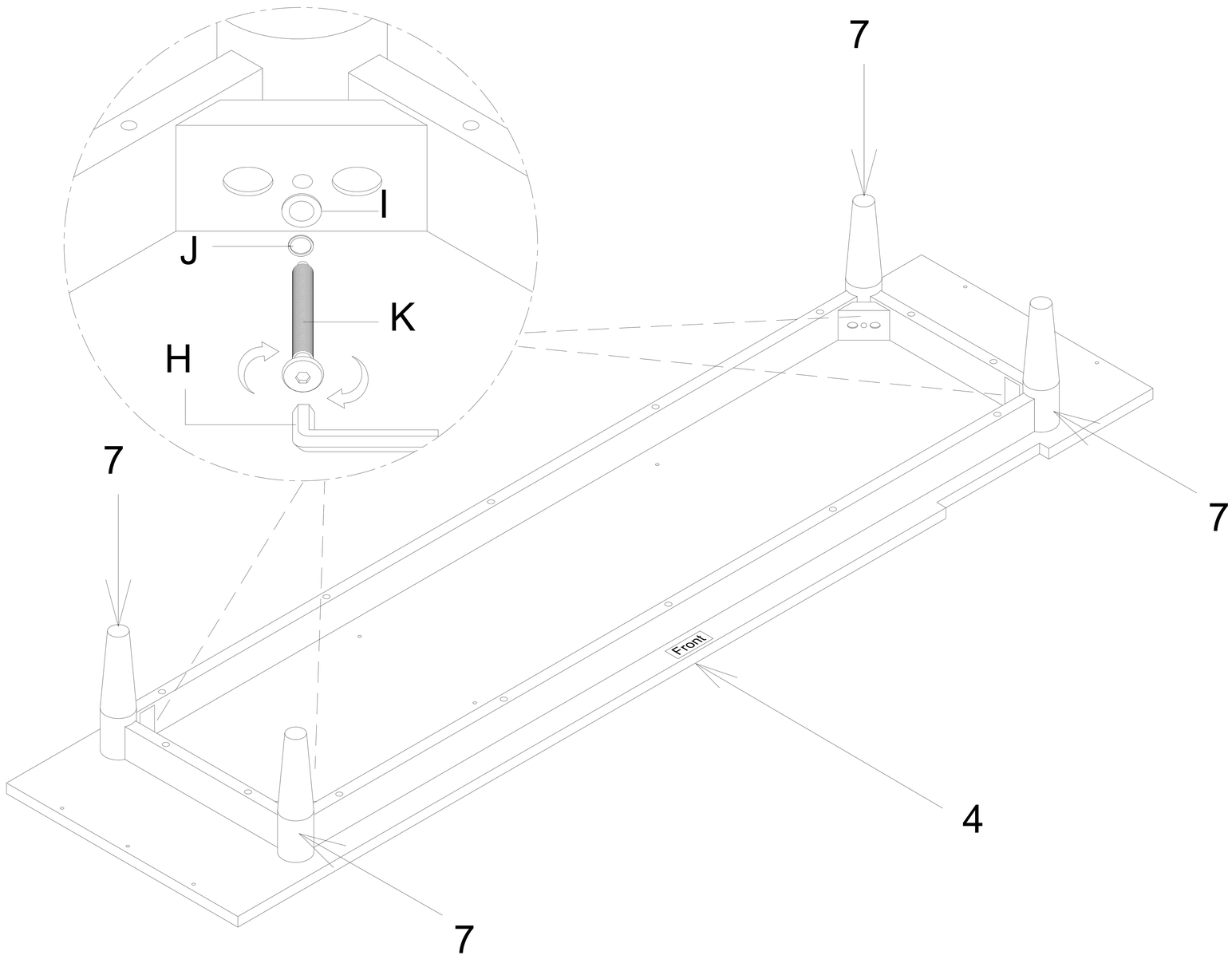

## 9 Attach Center Bar (8) to Left Side Panel (2) and Left Partition (5), and secure with the Cam Lock (D) attached in the Step 2 and Step 4. Cover Cam Lock (D) with Cam Lock Cover (G).

NOTE : - Do not over tighten the Cam Lock (G).

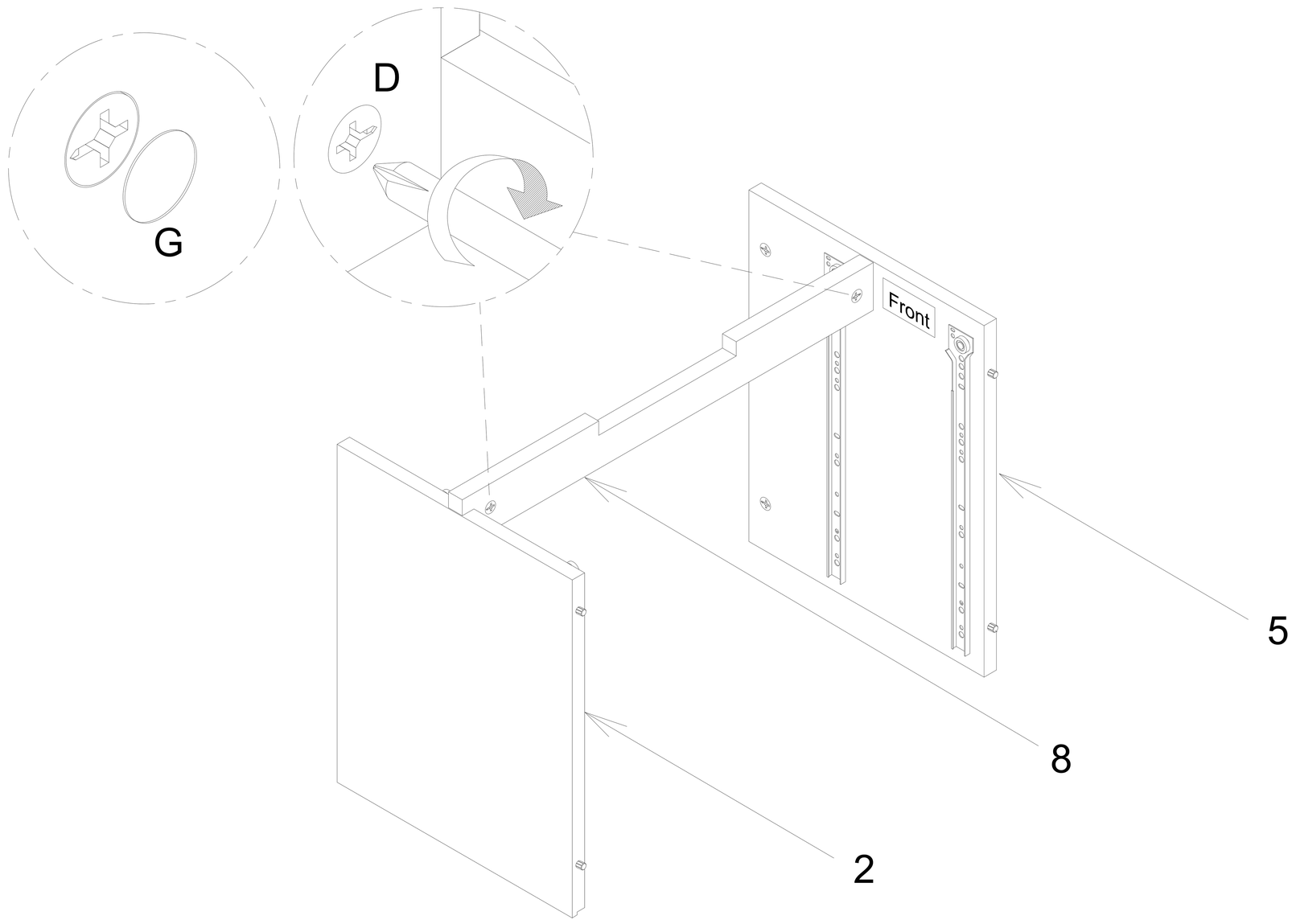


## 10 Attach Bottom Panel (4) to the assembled unit and secure with Screw (B).

NOTE : - Do not over tighten the Screw (B).

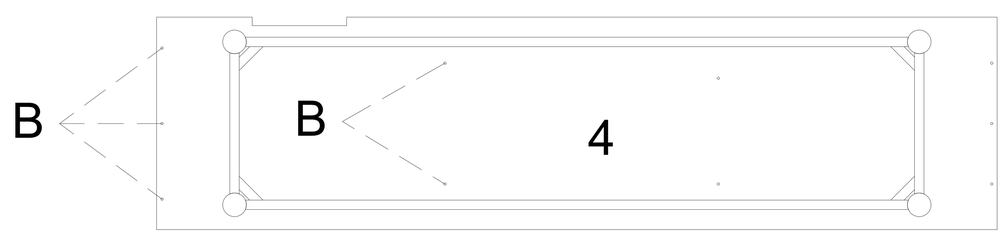


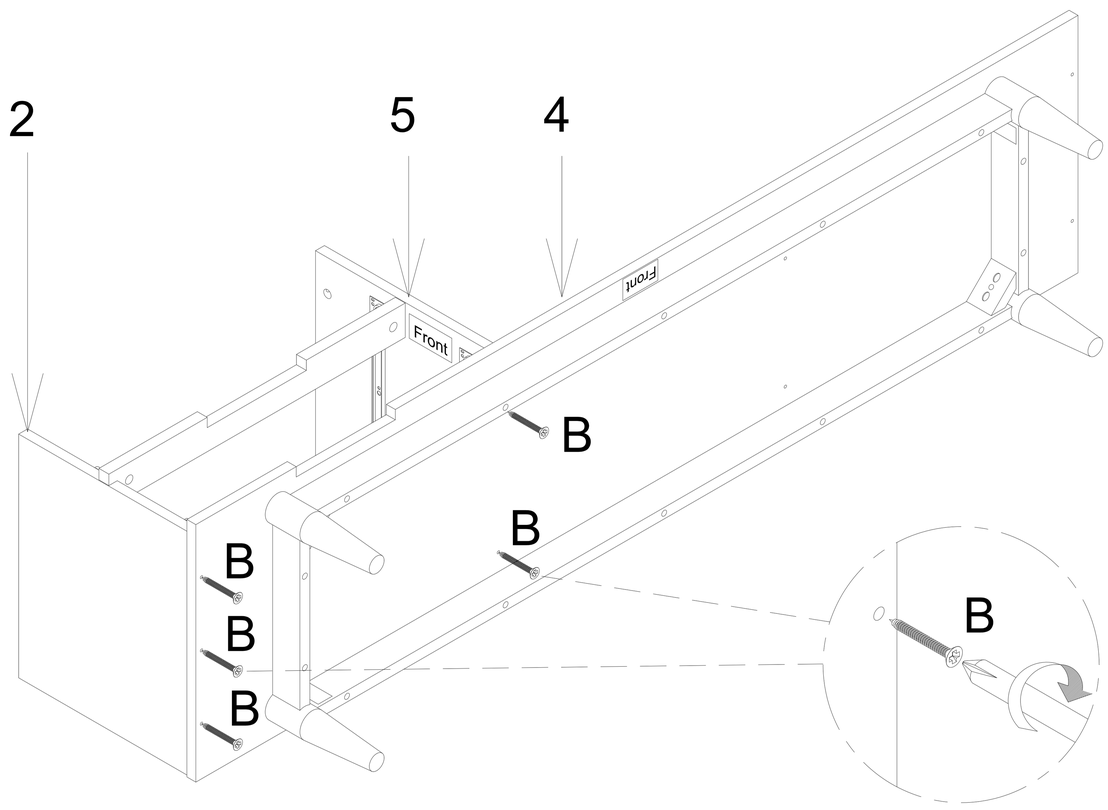

## 11 Attach Right Side Panel (3) and Right Partition (6) to Bottom Panel (4) and secure with Screw (B).

NOTE : - Do not over tighten the Screw (B).

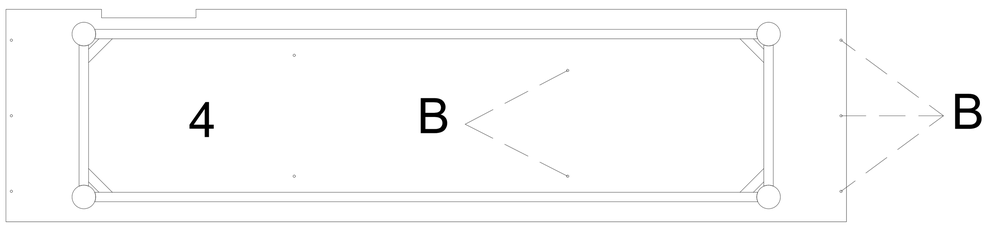


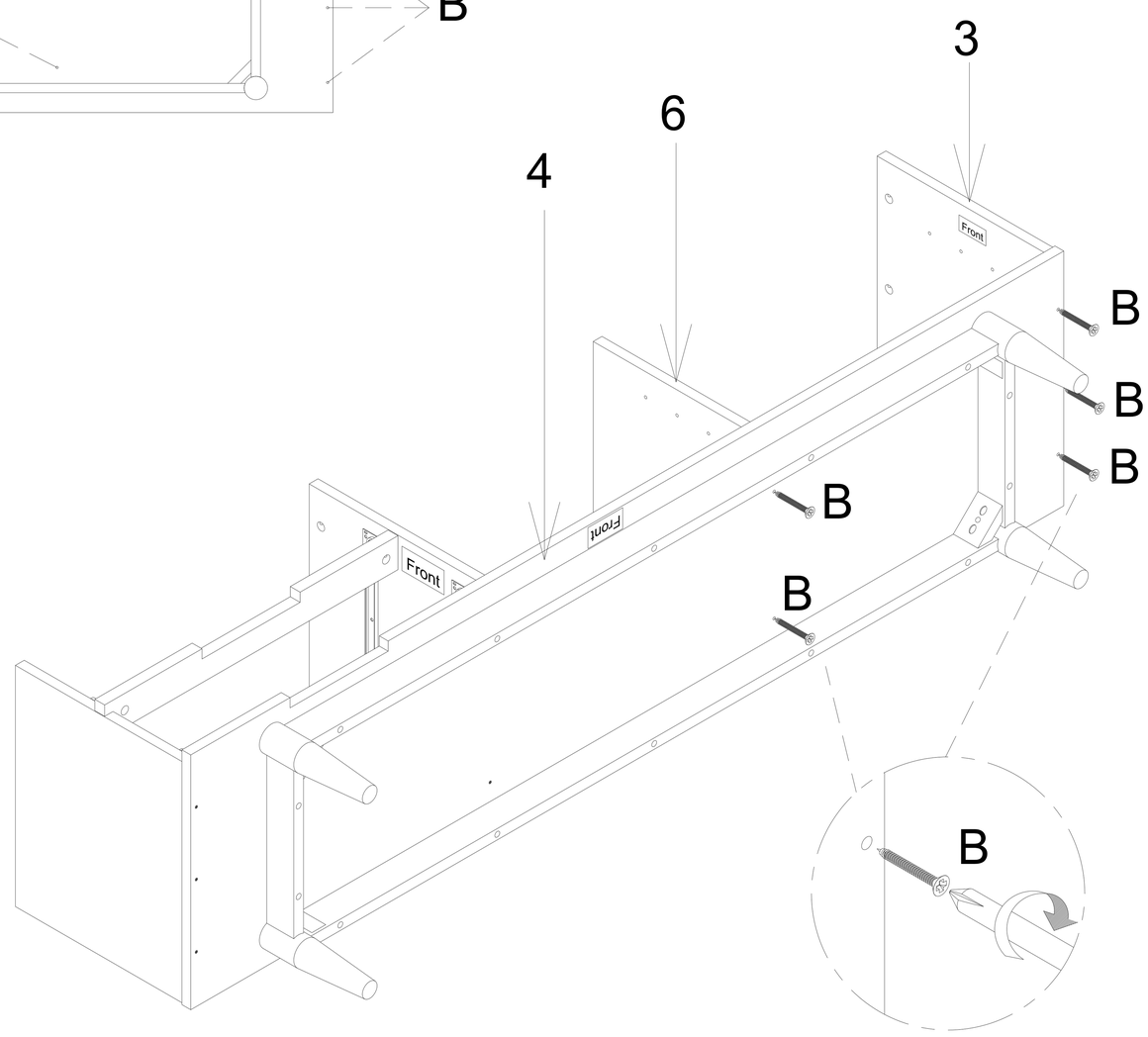


## 12 Stand the assembled unit up. Attach Top Panel (1) to the assembled unit and secure with the Cam Lock (D) attached in the Step 2 and Step 4. Cover Cam Lock (D) with Cam Lock Cover (G).

NOTE : - Do not over tighten the Cam Lock (D).

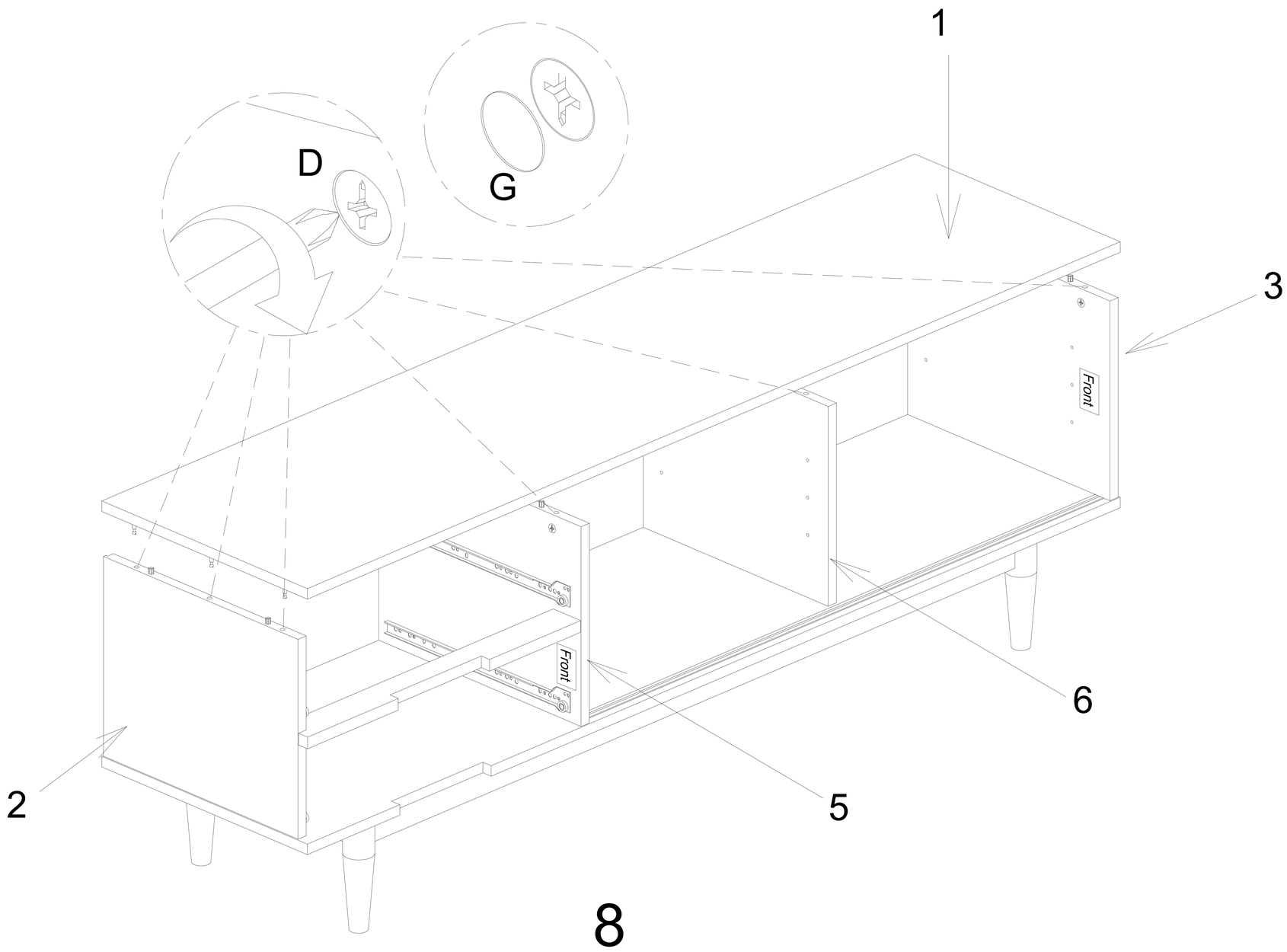

## 13 Attach Back Plywood (11) to the assembled unit and secure with Panhead Screw (M).

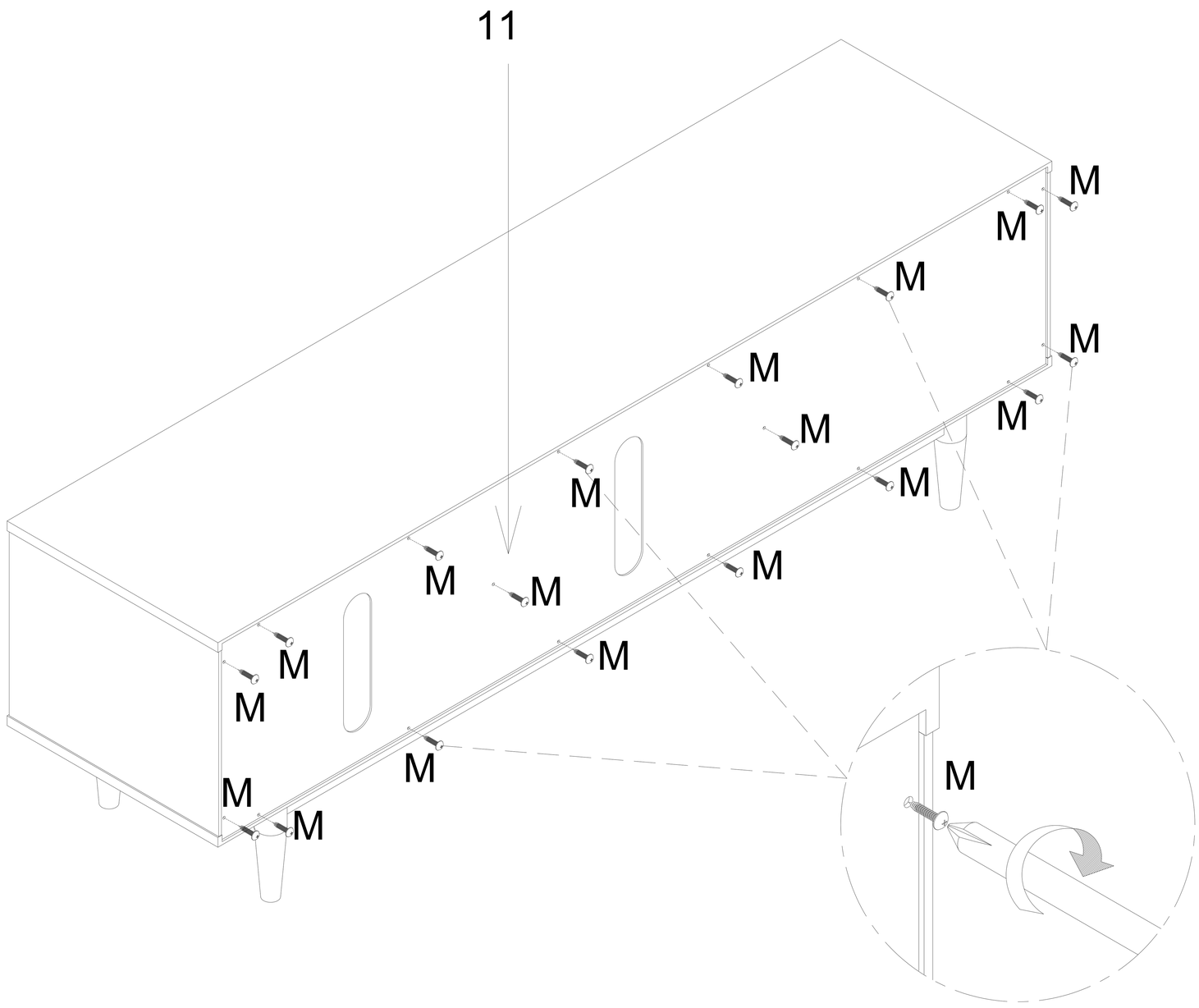


## 14 Attach Shelving Support (L) into Right Side Panel (3) and Left & Right Partition (5 & 6). Slot Shelving (9) into the assembled unit.

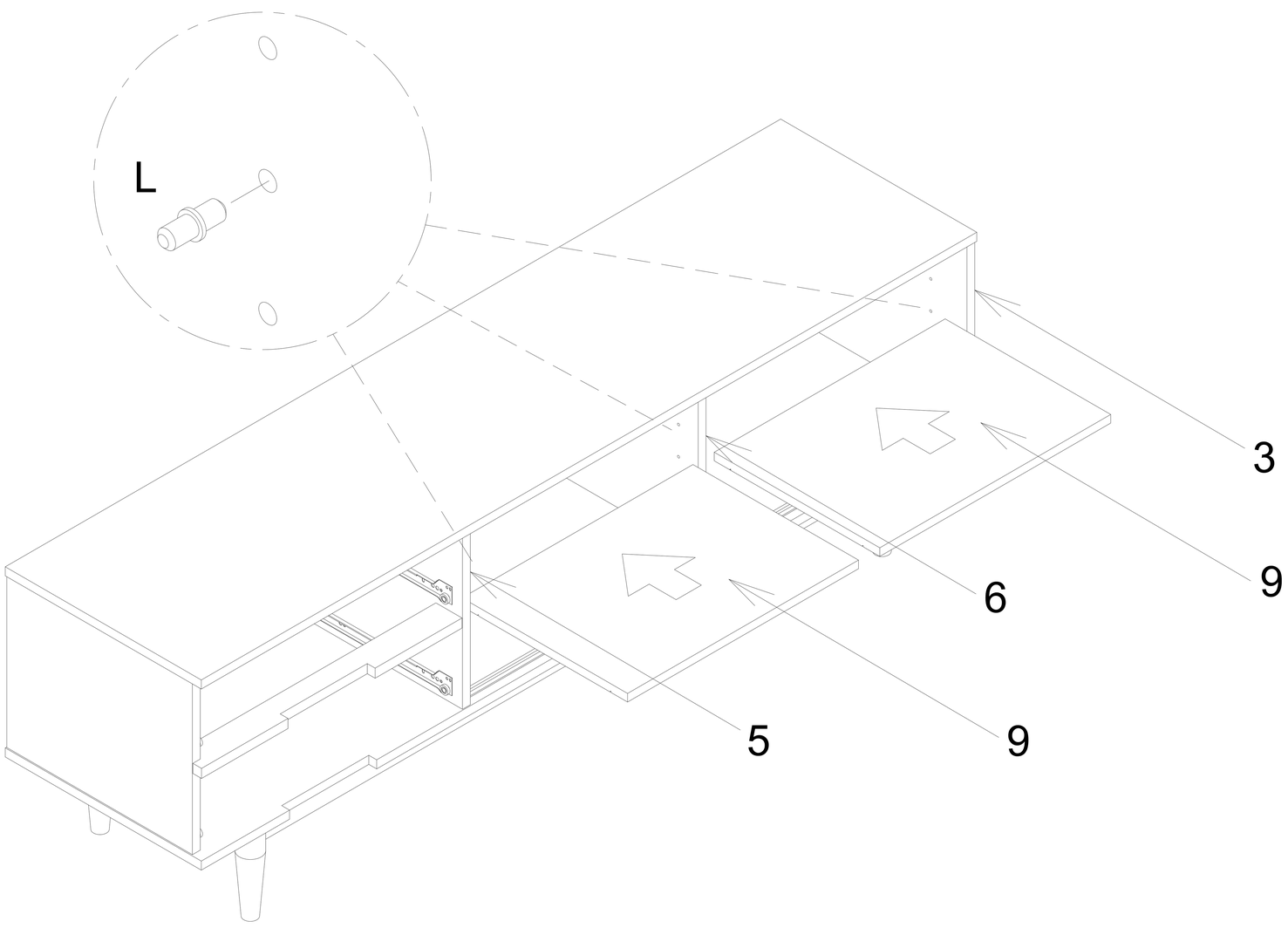

## 15 Attach Door (10) into the assembled unit.

NOTE : i) Sit Door (10) on Bottom Panel (4). Make sure the wheels sit onto the track.
ii) Push the pin to unlocked position to allow Door (10) to align with track at the top. Release the pin, and the catch will spring back and fall into the track.

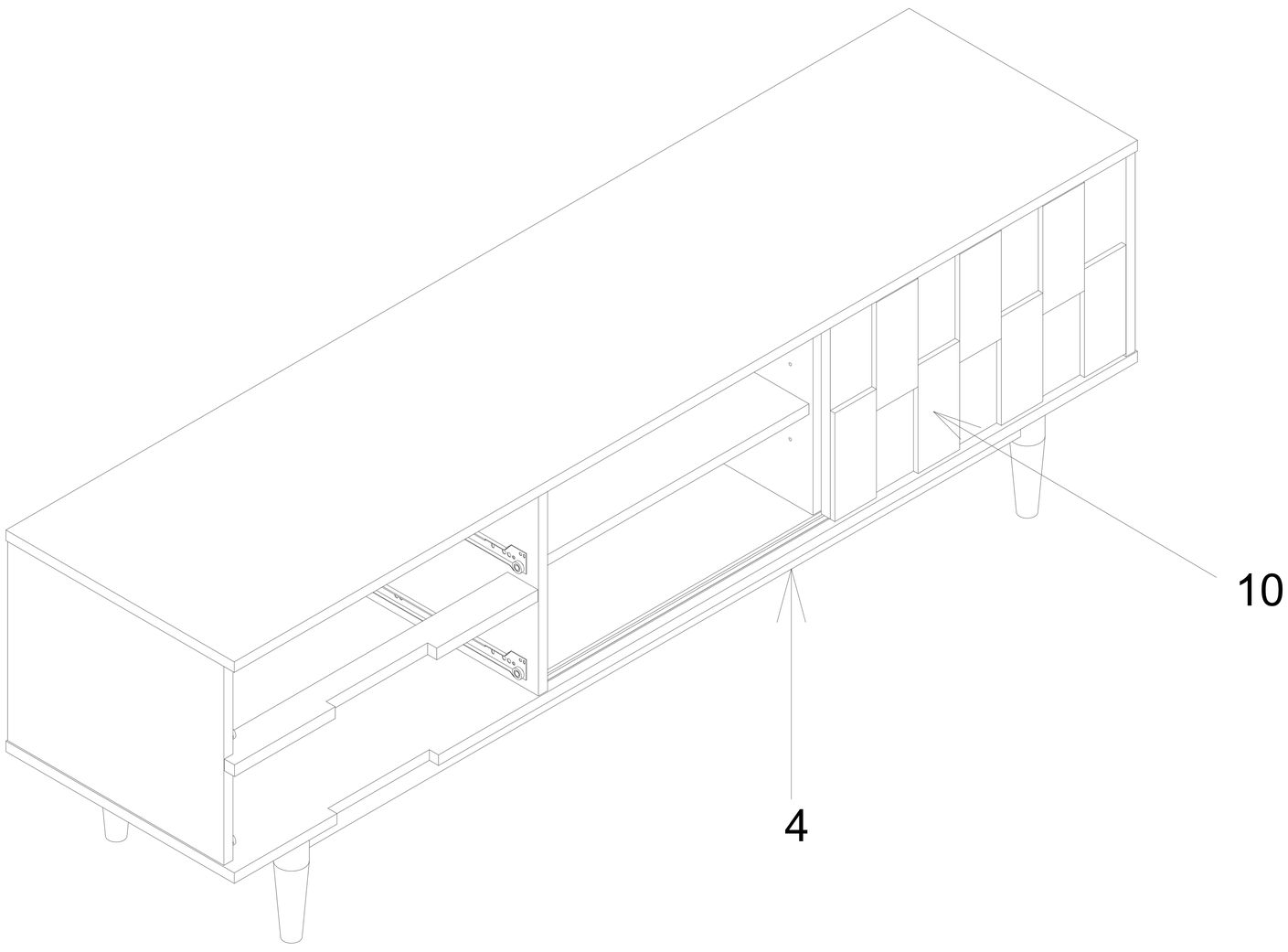


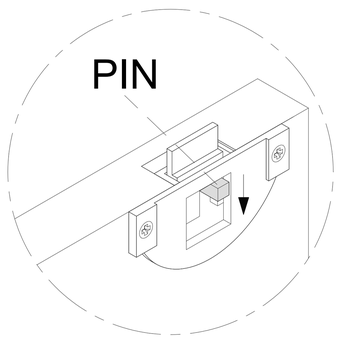


LOCKED POSITION

(i) Bottom of Door

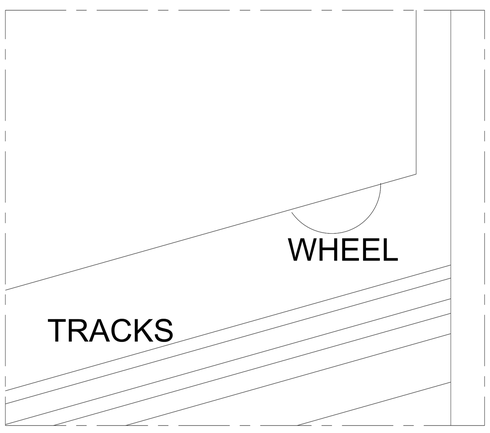


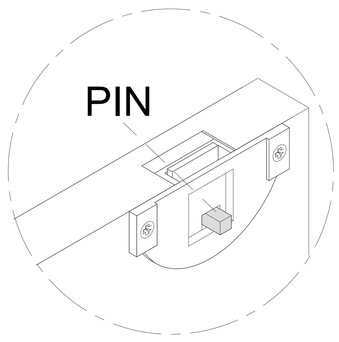


UNLOCKED POSITION

(ii) Top of Door

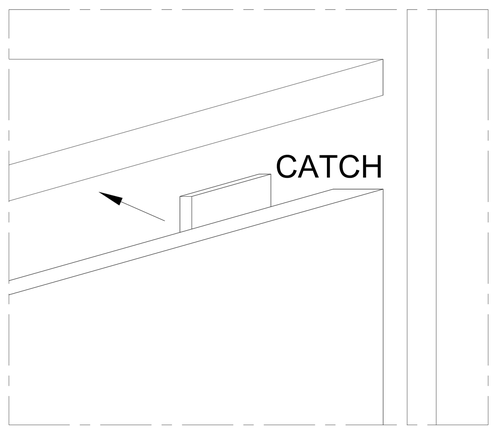

## 16 Attach Dowel (E) and Cam Lock (D) to Left & Right Drawer Side (102 & 105) and Drawer Back (103). Attach Cam Bolt (D) to Left & Right Drawer Side (102 & 105) and Drawer Front (101).

NOTE : - Make sure arrows on each Cam Lock (D) points towards nearest edge with holes.

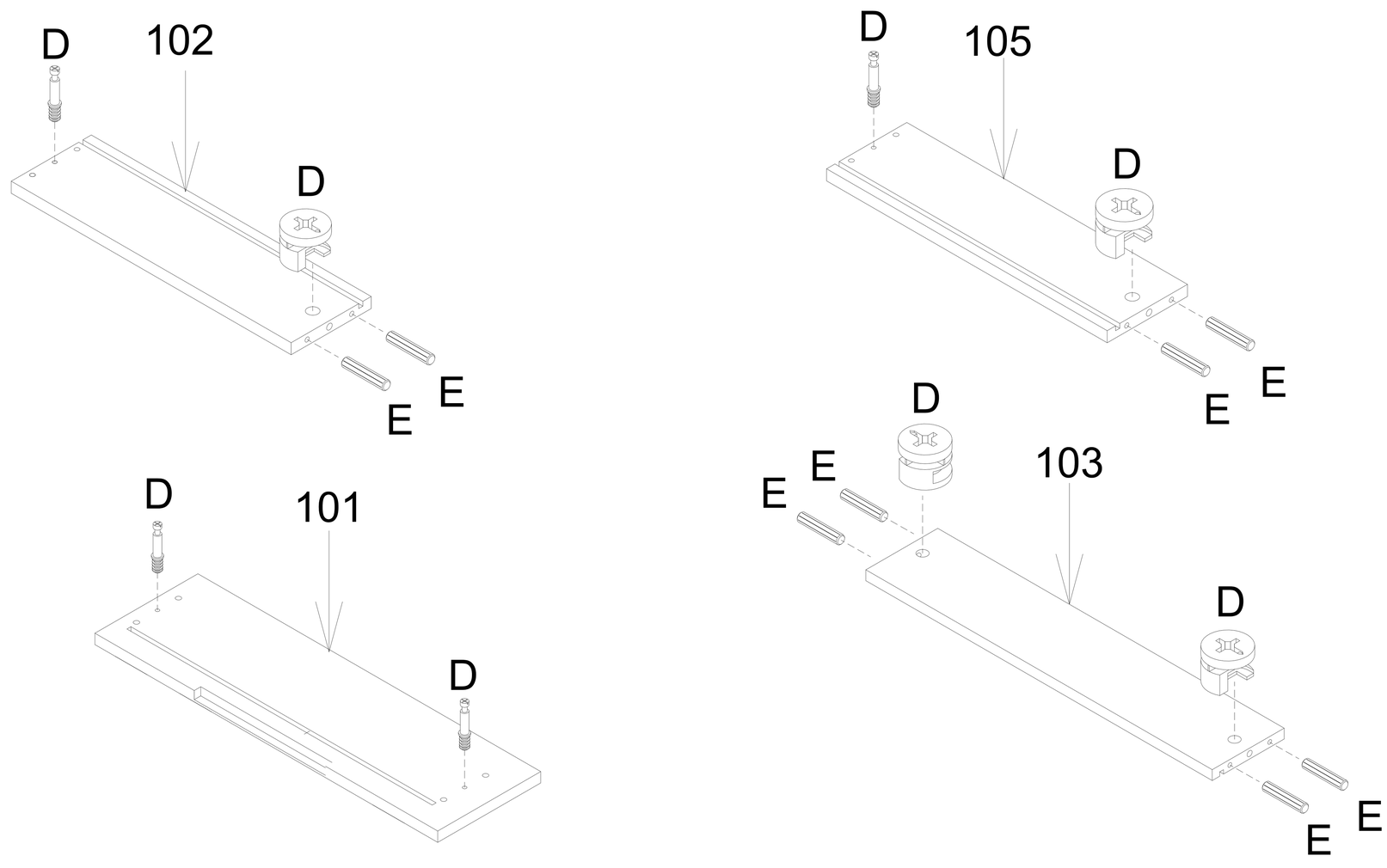


## 17 Attach Left & Right Drawer Side (102 & 105) to Drawer Back (103) and secure with the Cam Lock (D) attached in the Step 16. Cover Cam Lock (D) with Cam Lock Cover (G).

NOTE : - Do not over tighten the Cam Lock (D).

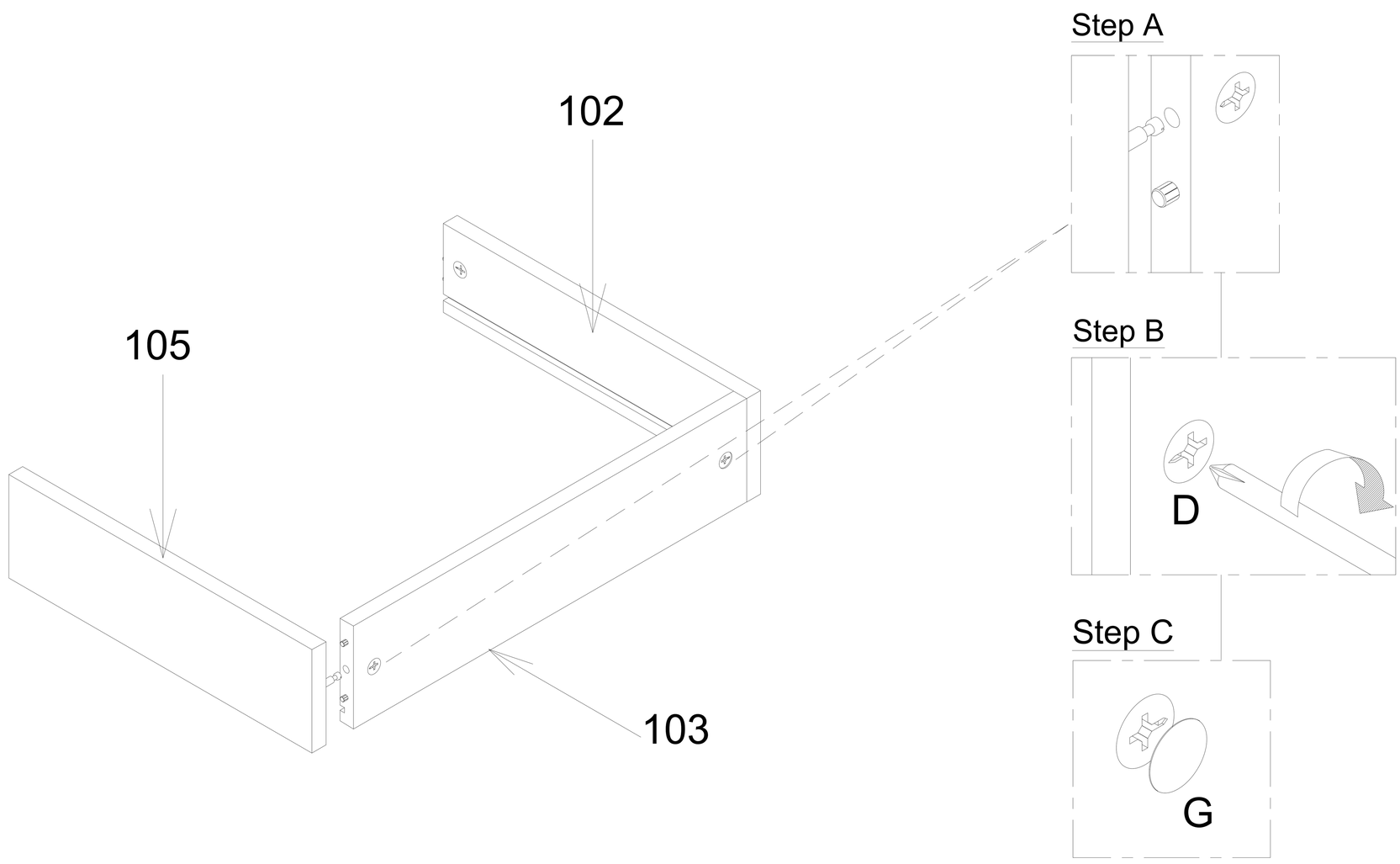

## 18 Slot Drawer Base (104) into the corresponding grooves. Attach Drawer Front (101) to Drawer Box and secure with the Cam Lock (D) attached in the Step 16. Cover Cam Lock (D) with Cam Lock Cover (G).

NOTE : - Do not over tighten the Cam Lock (D).

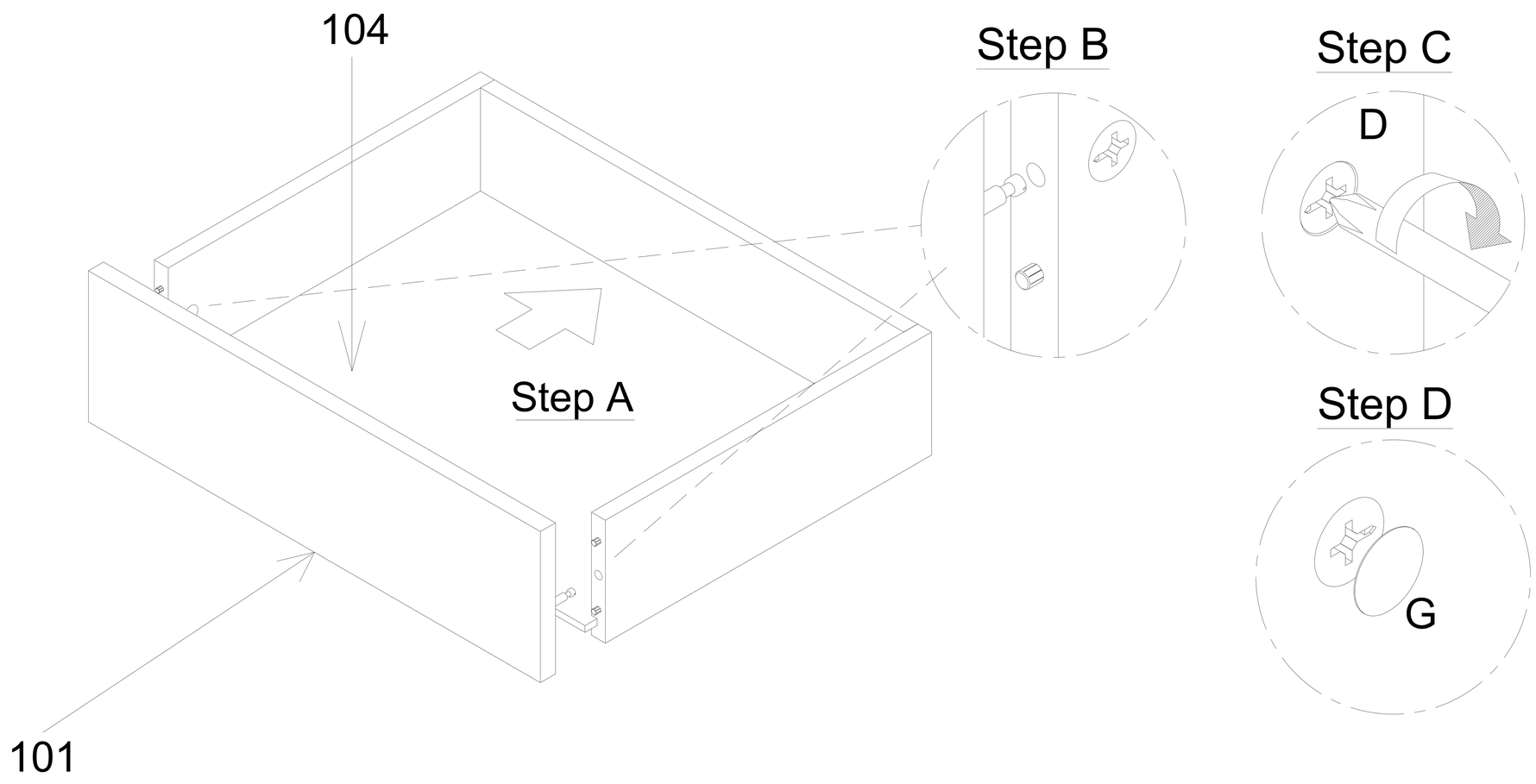


## 19 Turn over the Drawer Box. Attach Runner (F) to Left & Right Drawer Side (102 & 105) and secure with Screw (A).

NOTE : - Runner roller should be flush and towards the back of the Drawer Box.

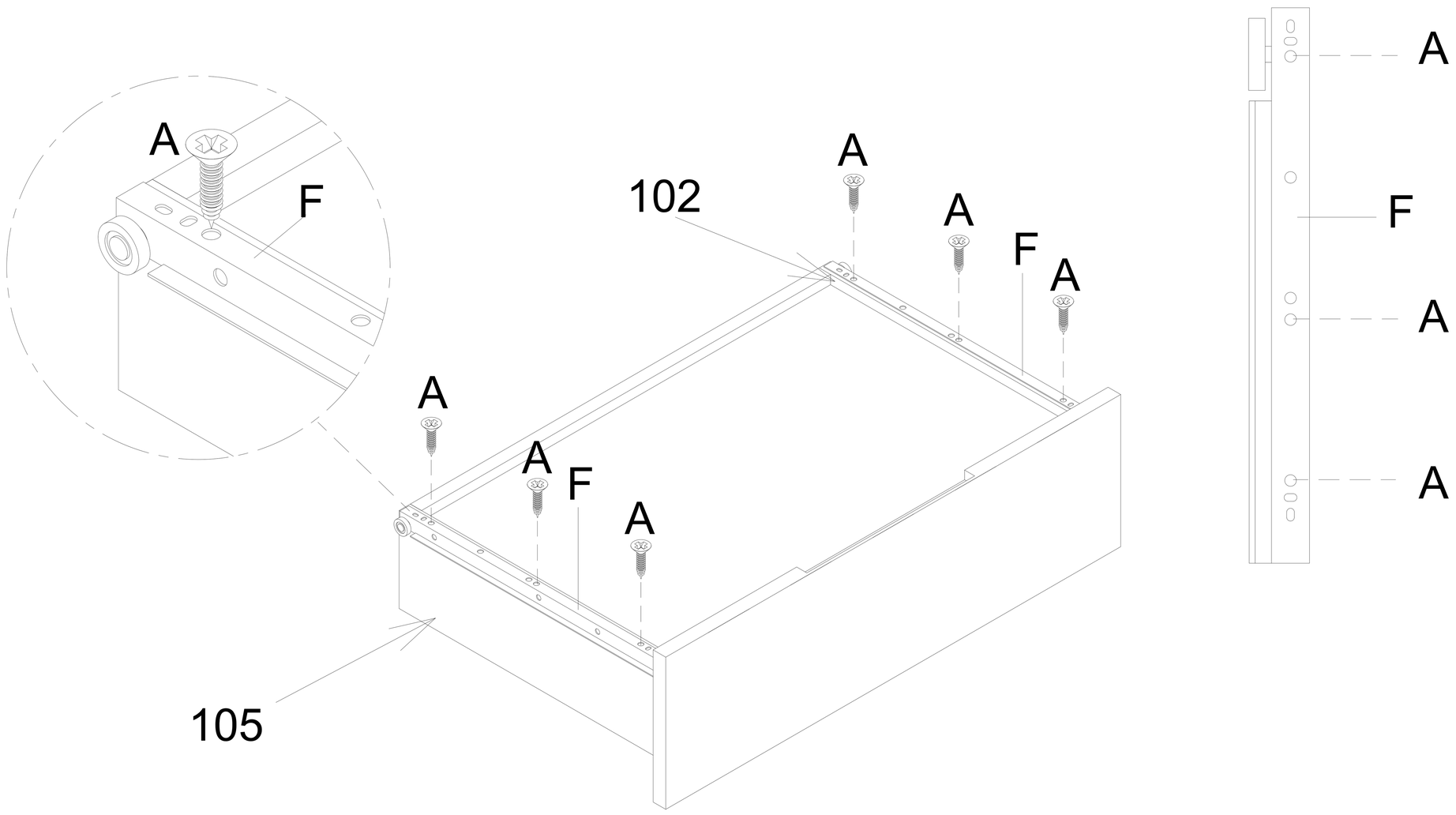

## 20 Slot Drawers into the assembled unit.

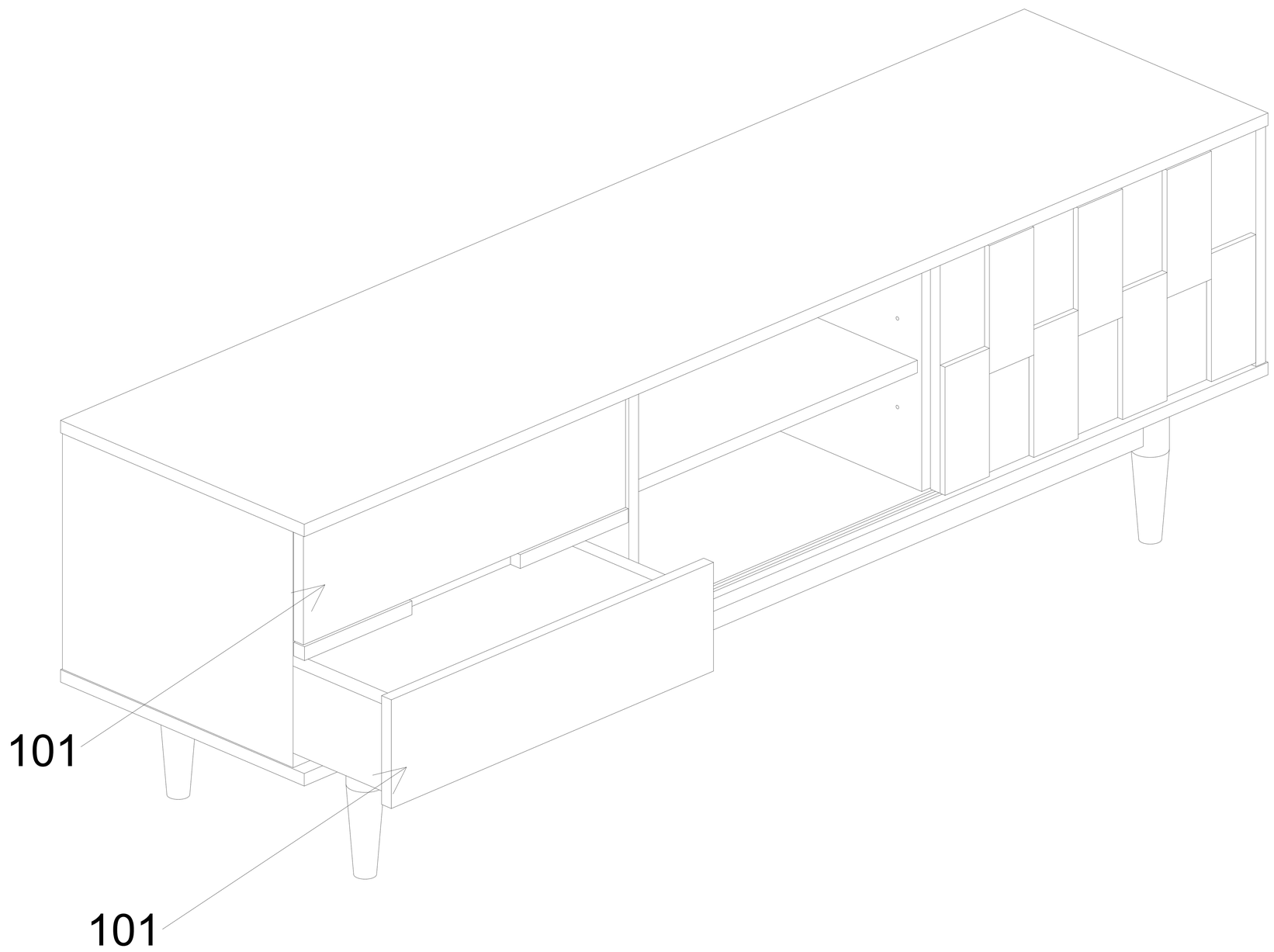


**Cleaning & Care**
Treat surface with care. Surface is resistant to scratches but is not scratch resistant. Clean surfaces with a dry or damp soft cloth. Do not use abrasive cleaners. Hardware may loosen over time. Periodically check that all connections are tight.