Vessel Sink

INSTALLATION INSTRUCTIONS

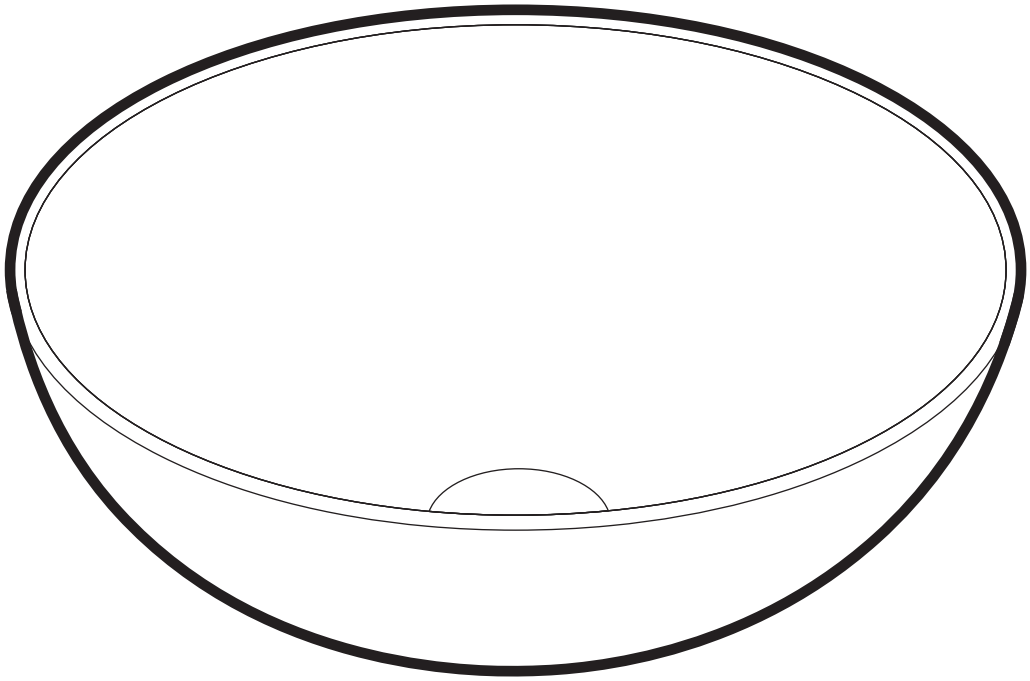

PRIOR TO INSTALLATION:

- Inspect product to ensure no damages have occurred while in shipping.
- Observe all plumbing and building codes in accordance with your state and local requirements.
- All dimensions are nominal! Be sure to measure your sink prior to installation.
- The step-by-step guidelines in the installation instructions are a general reference. Should there be any discrepancies, Swiss Madison cannot be held liable. It is recommended to install all Swiss Madison products by hiring a licensed professional.
- Read installation and maintenance instructions thoroughly before installing. Be sure to use proper tools and always wear proper personal safety accessories for your protection.
- Two people are recommended to handle and install this product as it is fragile.

QUESTIONS OR CONCERNS?

Please contact us:

1-434-623-4766

info@swissmadison.com

SUGGESTED TOOLS & MATERIALS:

Safety Glasses

Drill

Pencil

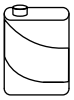
Acetone

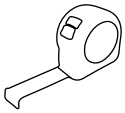
Tape Measure

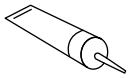
Adhesive

1 Mark Faucet & Drain Location

- Place your sink in desired location on countertop and mark the drain and faucet hole with a pencil.
- Make sure clearance is suitable for back splash, faucet, and plumbing for the sink.

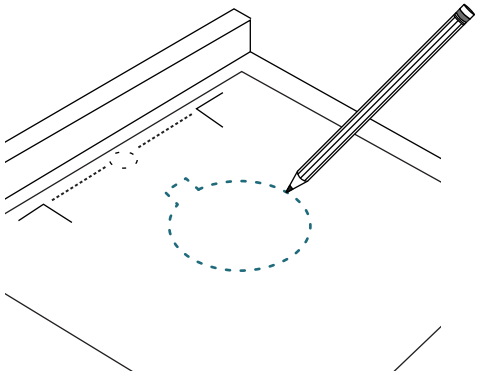

2 Drill Countertop

- Cut the opening for the drain in the countertop.

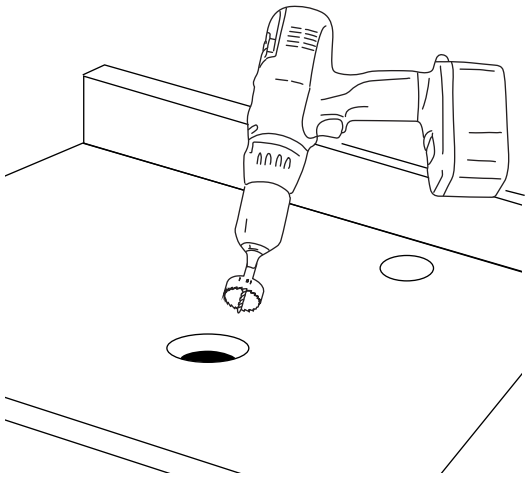

3 Install Faucet

- Install faucet (not included) according to manufacturer's instructions.

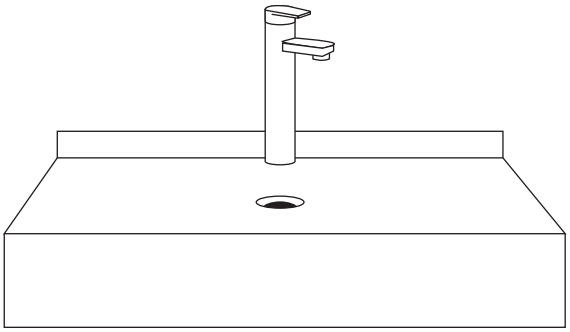

4 Install Sink

- Check alignment of the sink to the opening in the countertop.
- Use a bead of clear silicone (or preferred adhesive) around the underside of the sink.
- Carefully place the sink on the countertop, align, and press firmly.
- Allow sealant to set above 60 minutes.
- Use acetone or denatured alcohol to remove any excess sealant after application.

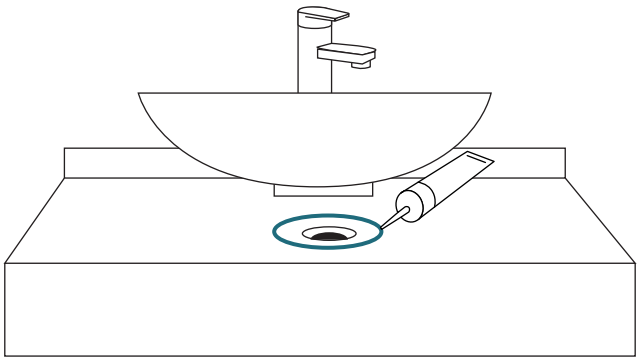

Vessel Sink

USE & CARE INSTRUCTIONS

CARE AND MAINTENANCE

- It is recommended to wash the basin frequently.
- Please clean only use warm soapy water and then dry with a soft cloth.
- Do not use wire brushes, detergents, abrasives and other supplies to clean, to prevent abrasion on the surface of the basin.
- Do not use hard or sharp objects to scratch the surface of the basin.
- Pay attention to avoid collision.
- It is recommended to use wax to maintain the wash basin every six months.

RUB LIGHTLY
WITH SOFT CLOTH

CLEAN
PERIODICALLY

CLEAN SINK WITH
MILD ABRASIVE

HARSH
CLEANERS

STEEL
WOOL

LEAVING BLEACH
ON FOR TOO LONG

ONE-YEAR LIMITED WARRANTY

Swiss Madison® products are made with quality materials and excellent craftsmanship to provide our customers with beautiful, durable, long-lasting products. Should there be any defects in materials or craftsmanship under regular use that are discovered within the first year after delivery, Swiss Madison® will provide replacement parts at no charge, or at its discretion, replace any product or part of the product that is deemed defective, under normal installation, use, service or maintenance. This warranty applies only to the original purchaser. Proof of purchase must be submitted with any warranty claim.

Swiss Madison® recommends that all installations of Swiss Madison® products to be conducted by a licensed plumber or contractor. Swiss Madison® will not be held responsible for any damage or product failure due to improper installation, misuse, or failure to utilize a licensed plumber or contractor for installation. Swiss Madison® is not responsible for any installation or removal costs.

THIS ONE-YEAR LIMITED WARRANTY WILL BE VOIDED IF:

- The installation instructions were not followed by the installer
- The product has been moved from its initial place of installation
- The product has in any way been modified from its original condition
- The product has been subjected to improper maintenance, abuse, misuse, excessive use of chemicals, accidents, or other damages

Swiss Madison® makes no warranty that its products comply with any local building or plumbing codes. It is the consumer's responsibility and obligation to determine local code compliance prior to and during installation.

Swiss Madison® is not responsible for any special, incidental or consequential damages associated with the installation, replacement, return or use of the original purchaser's product. This includes, but is not limited to: freight costs, labor, travel time, lost profit, home damages and other contingent liabilities and costs (including, without limitation, costs associated with 'professionals' or 'experts', investigations, audits, analyses, attorneys and any other professional/hired services). Some states do not allow the exclusion or limitation of incidental or consequential damages, so the above limitation or exclusion may not apply to you.

The Swiss Madison® warranty is a comprehensive and explicit limit of liability. All other warranties are hereby disclaimed and waived.

QUESTIONS OR CONCERNS? Please contact us directly at: 1-434-MADISON (623-4766)

WARNING:
Contents of your order may contain sharp and possibly other harmful pieces and may cause hazard to children and adults. Swiss Madison® is not responsible in any way for personal injuries or damages.