NOTES:

1 OPEN DOOR VIEW INCLUDES HINGE SPACE OFFSET.

PRODUCT	H1	H2	DRAWER FRONT SIZE	DOOR SIZE
			ROUNDED TO THE NEAREST 1/32	
OVD3384	84"	13 9/16"	31 1/32" X 10 5/32"	15 13/32" X 9 31/32"
OVD3390	90"	19 9/16"	31 1/32" X 10 5/32"	15 13/32" X 16 1/32"
OVD3396	96"	25 1/2"	31 1/32" X 10 5/32"	15 13/32" X 22 1/32"

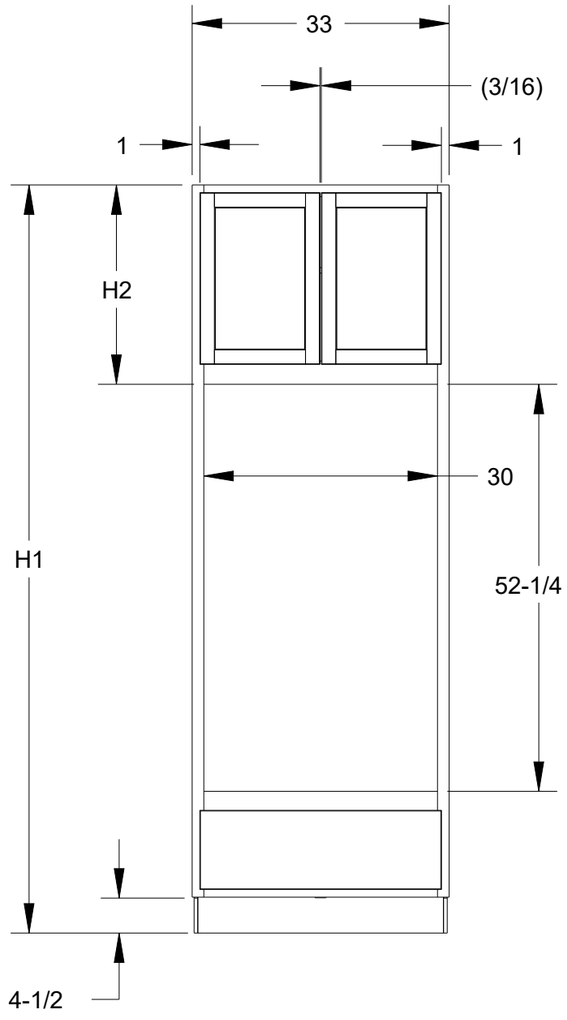

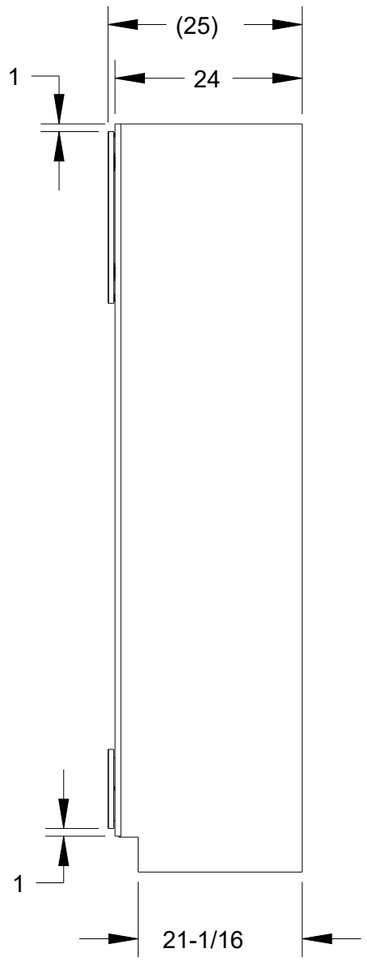

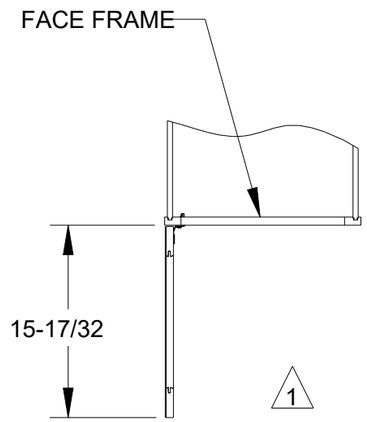

OPEN DOOR

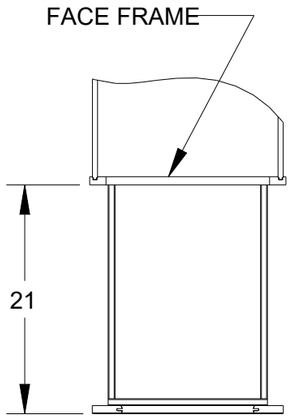

OPEN DRAWER

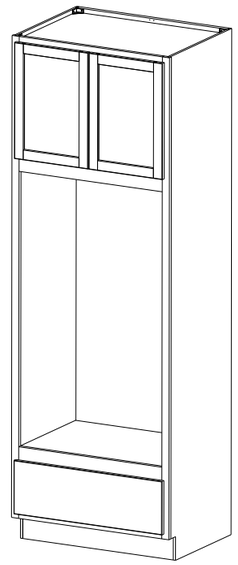

Hardware Resources™

HARDWARE RESOURCES RESERVES THE RIGHT TO CHANGE SPECIFICATIONS WITHOUT NOTICE. IN CASE OF A DISCREPENCY, ACTUAL PART GEOMETRY SUPERSEDES THIS DOCUMENT.

THE INFORMATION CONTAINED WITHIN THIS DRAWING IS THE SOLE PROPERTY OF HARDWARE RESOURCES INC. ANY REPRODUCTION IN PART OR WHOLE WITHOUT WRITTEN PERMISSION OF HARDWARE RESOURCES INC. IS PROHIBITED.

DOCUMENT STATUS **Released**		PRODUCT DESCRIPTION	
UNLESS OTHERWISE SPECIFIED DIMENSIONS ARE IN INCHES (IN)		OVD3384, OVD3390, OVD3396 HALF OVERLAY	
MATERIAL N/A	FINISH N/A	DRAWING NUMBER **OVD3384-OVD3390-OVD3396_HALF**	REV **B**
THIRD ANGLE PROJECTION	DATE 20AUG2026	SIZE A3 / SCALE 0.036	SHEET 1 / 1