alaterre
FURNITURE

BEXLEY CONSOLE TALE 36

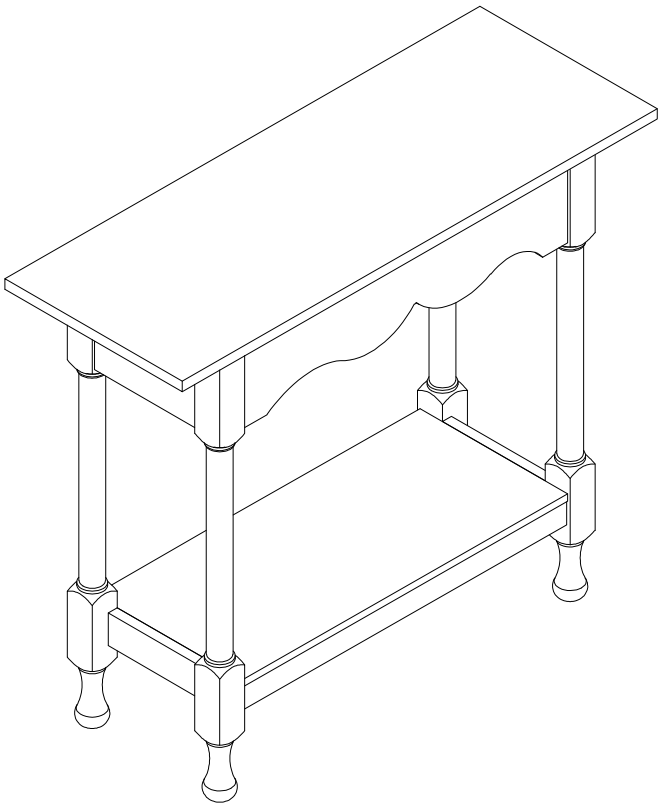

REPLACEMENT PARTS

Please do not contact the company purchased from as we can help you faster.
Order replacement parts and hardware at " www.TeamCustomerService.com "

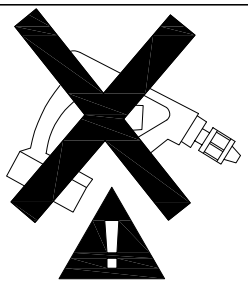

. Use of power tool to assemble this product will invalidate any claim and damage this product making it unsafe !!!
. Please assemble on a clean soft surface to avoid damage.

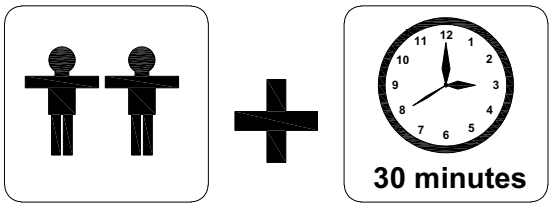

Tools Required

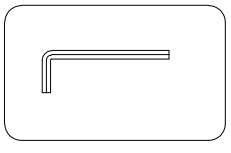

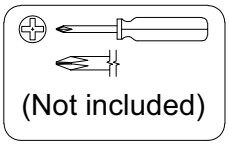

Part list - Bexley Console Table 36

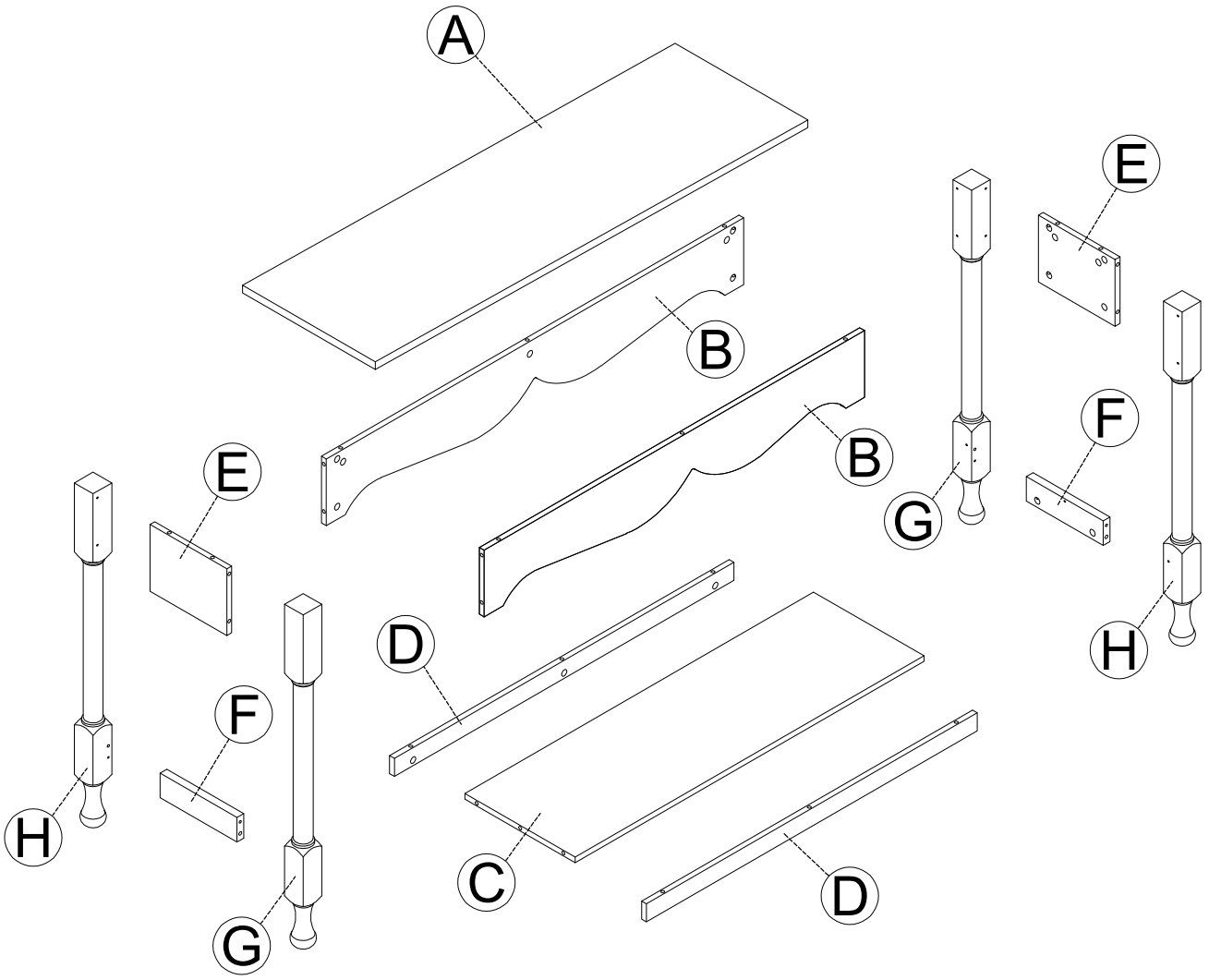

QTY							
A	1	C	1	E	2	G	2
B	2	D	2	F	2	H	2

Identifying the hardware-*Identify the hardware using the illustrations below*

1 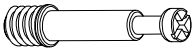 42
Ø6 x 35MM Cam Bridge

2  42
Ø15 x 9MM Cam Head

3 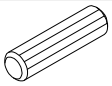 4
Ø6 x 30 Dowel

4  4
Leveler

ASSEMBLY DESCRIPTION

STEP 1

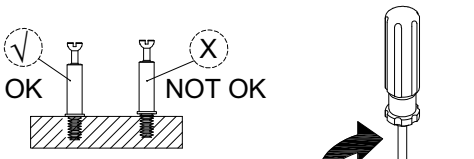

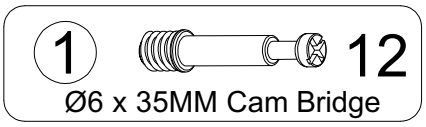

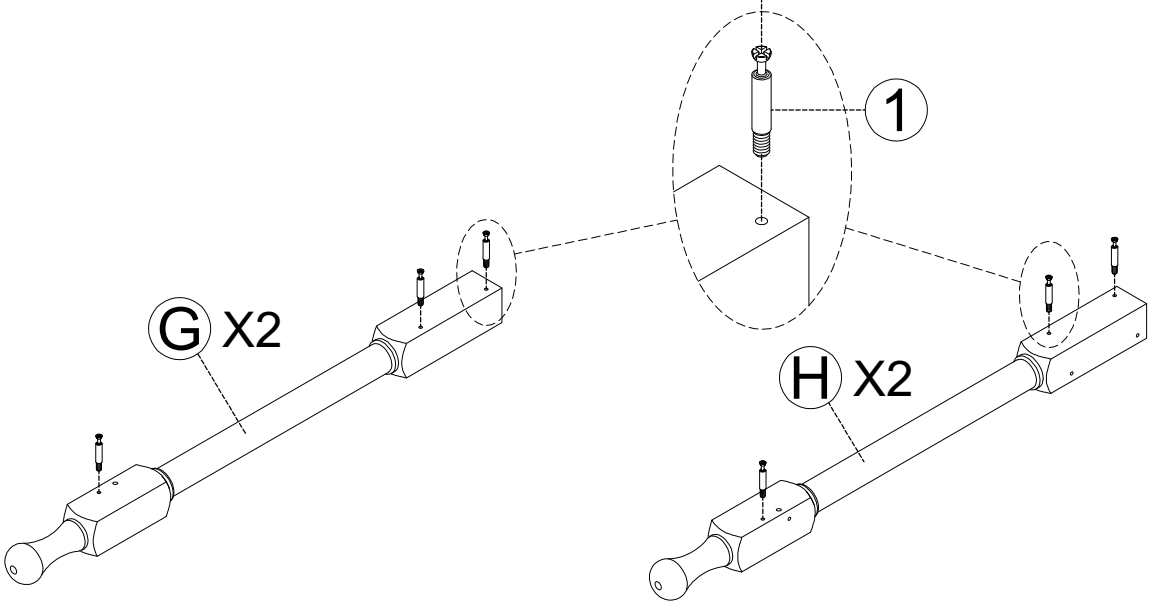

STEP 2



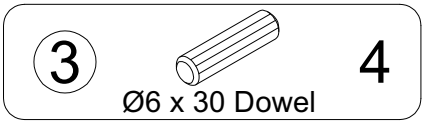

ASSEMBLY DESCRIPTION

STEP 3

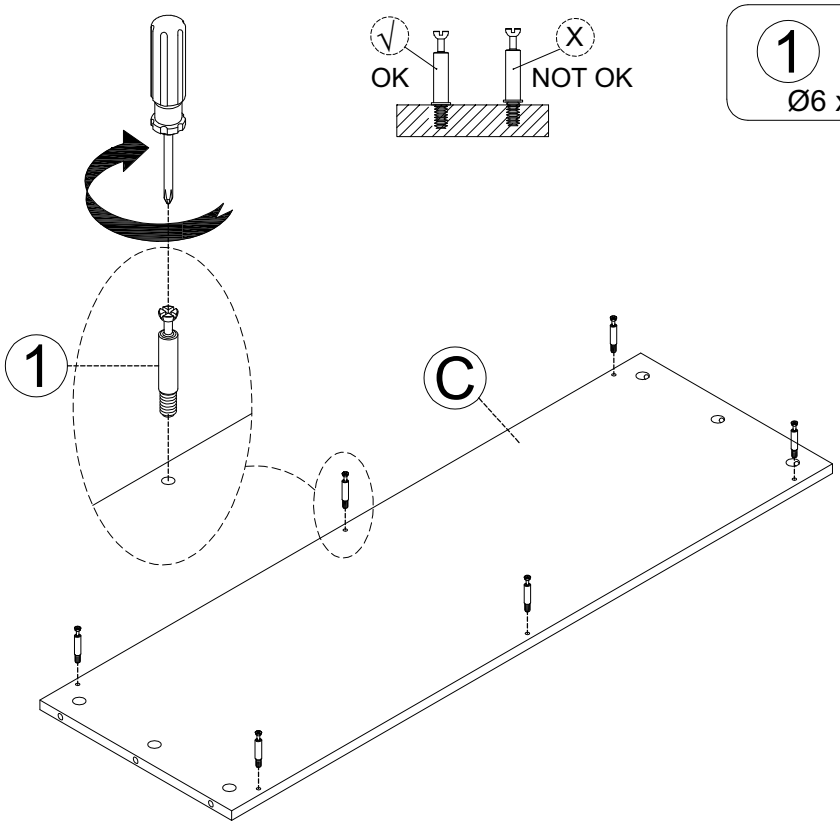

1 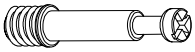 6
Ø6 x 35MM Cam Bridge

STEP 4

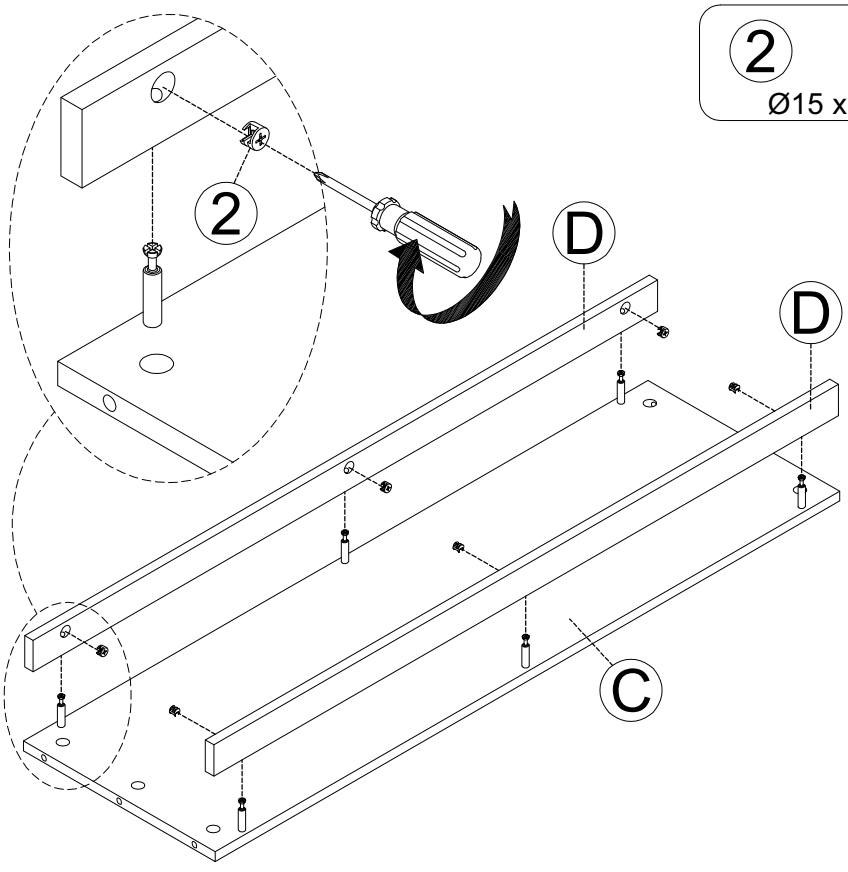

2  6
Ø15 x 9MM Cam Head

ASSEMBLY DESCRIPTION

STEP 5

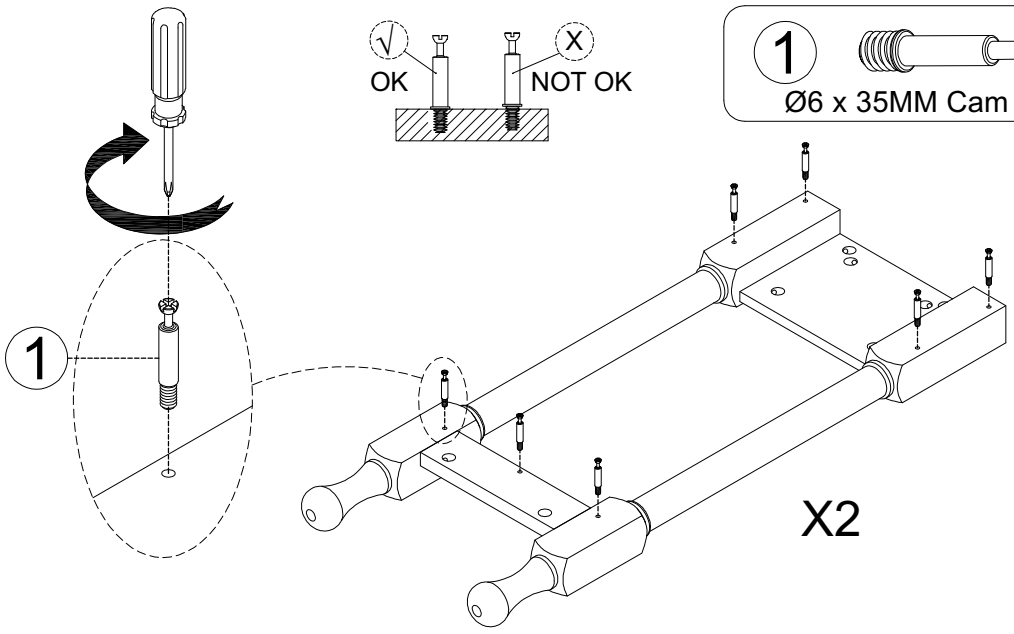

STEP 6

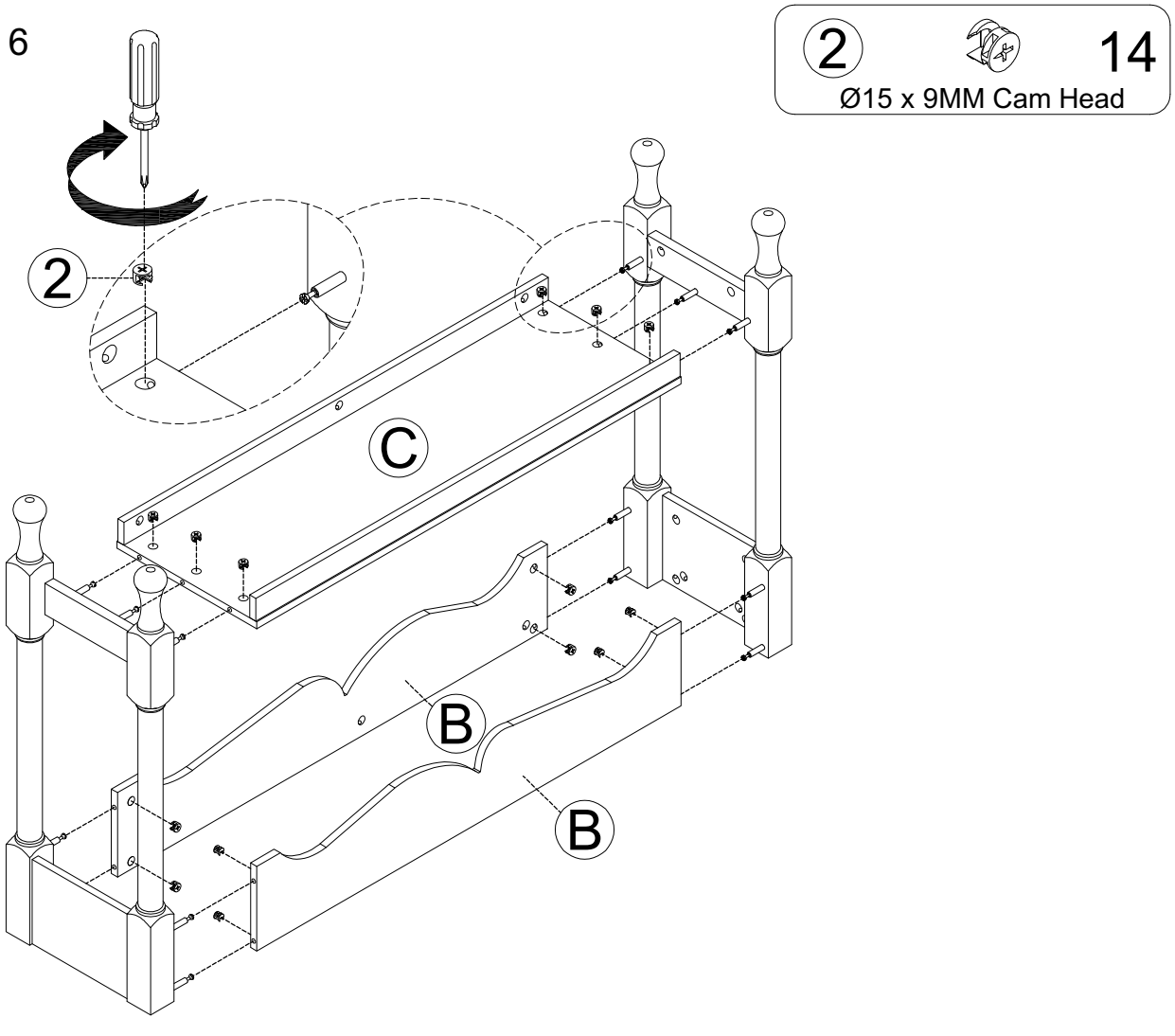

ASSEMBLY DESCRIPTION

STEP 7

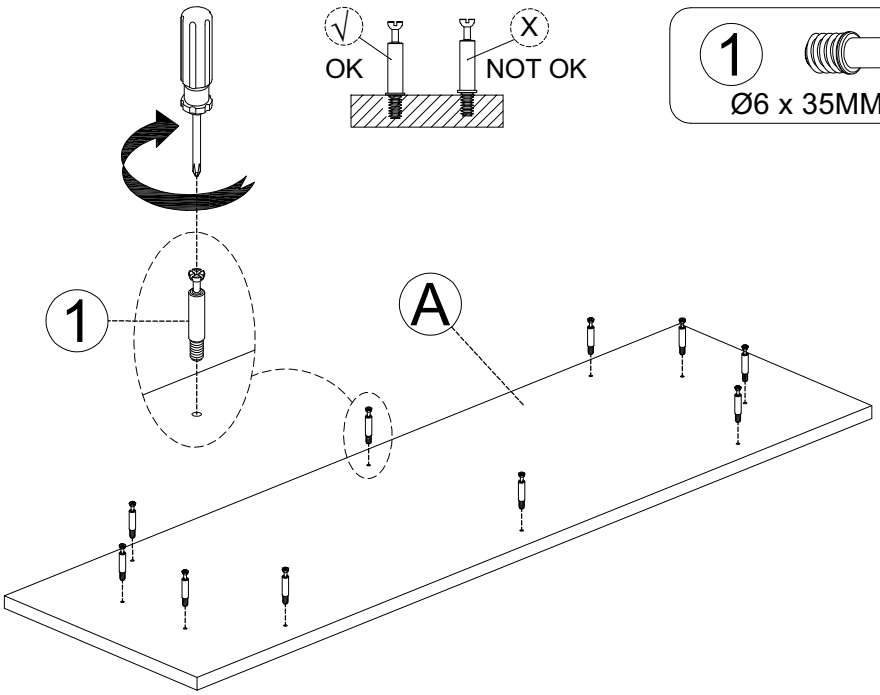

1 10
Ø6 x 35MM Cam Bridge

STEP 8

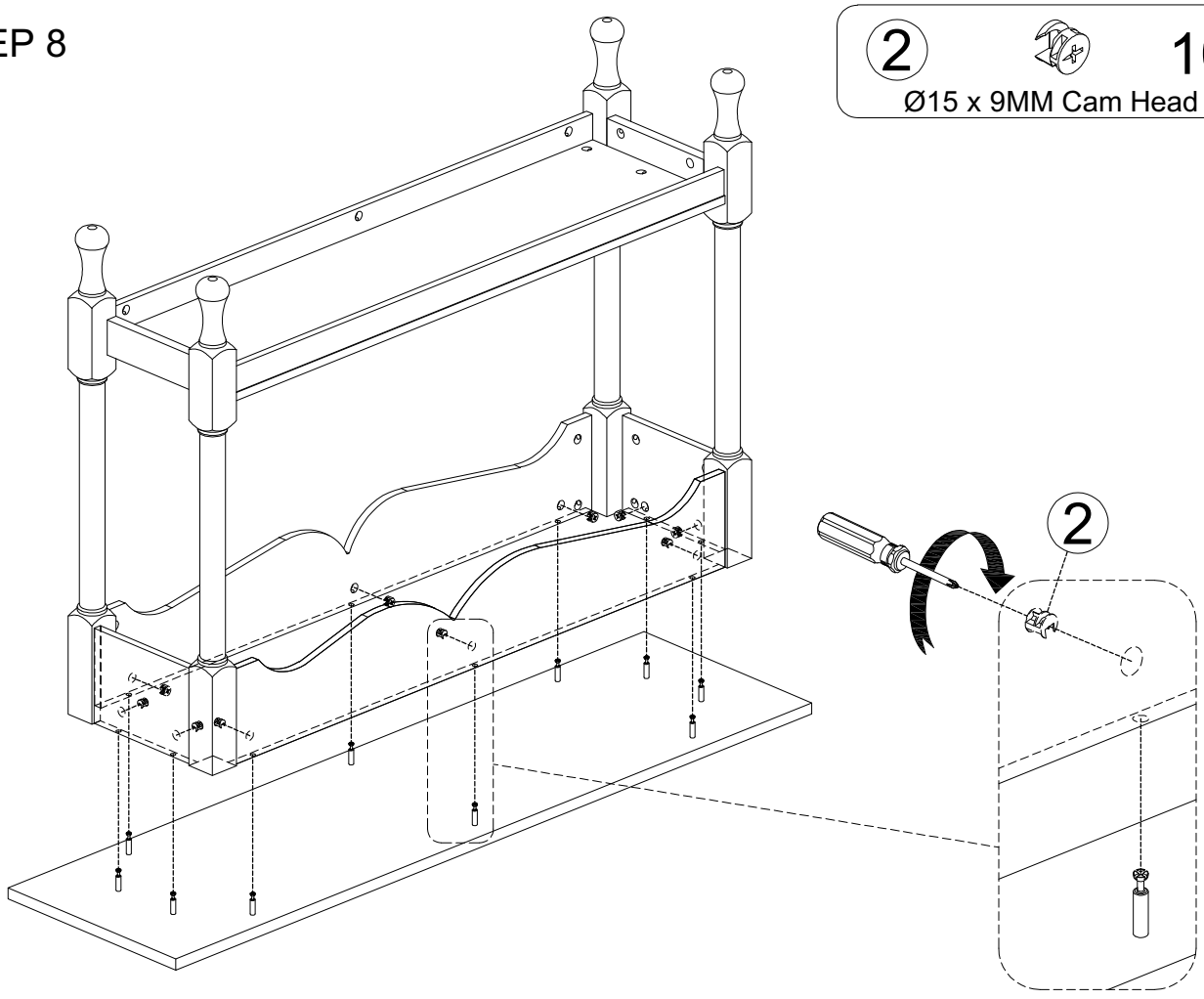

2 10
Ø15 x 9MM Cam Head

ASSEMBLY DESCRIPTION

STEP 9

4 Leveler 4

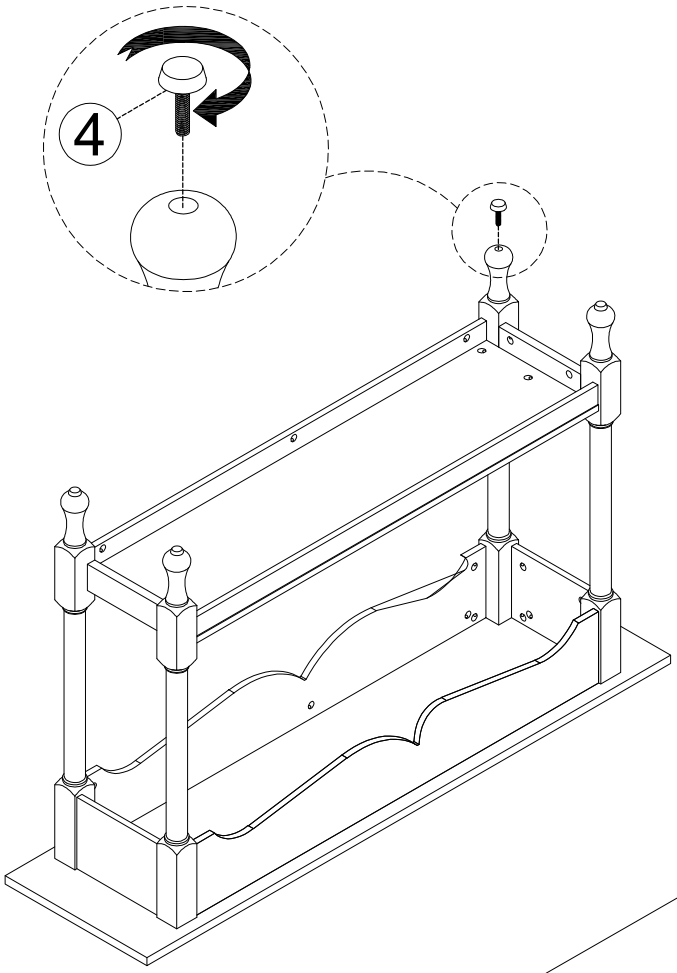

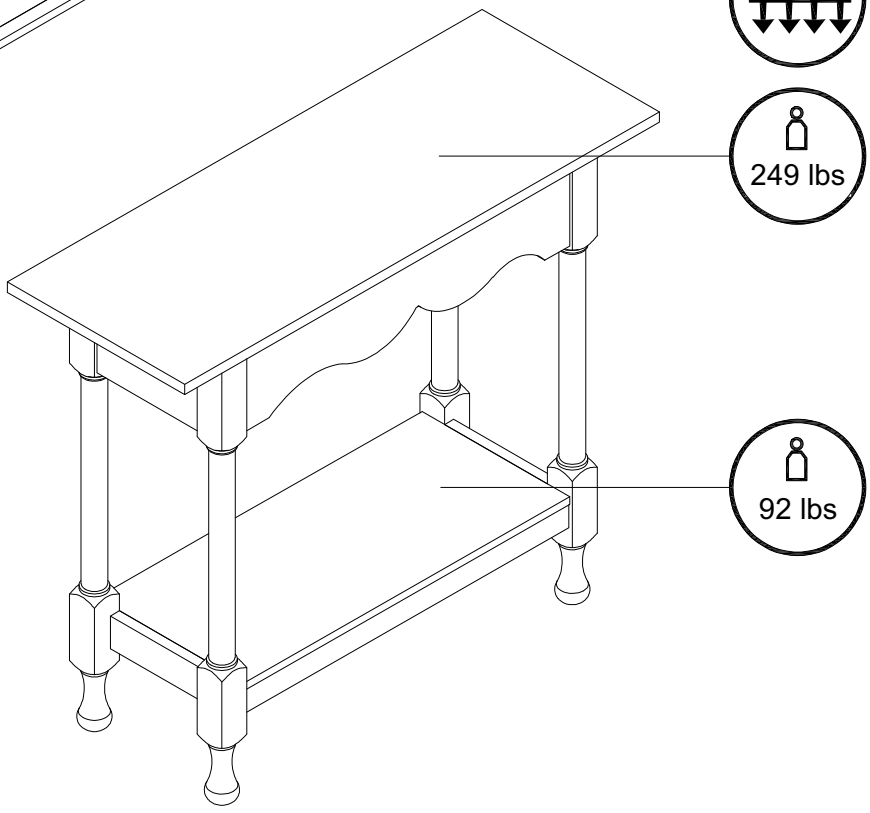

Finished