KINGSTON

TO ORDER PARTS, CALL: 1-877-252-7277
www.kingstonbrass.com

VRTRS653224

65" Solid Surface White Stone Freestanding Tub with Pop-UP Drain

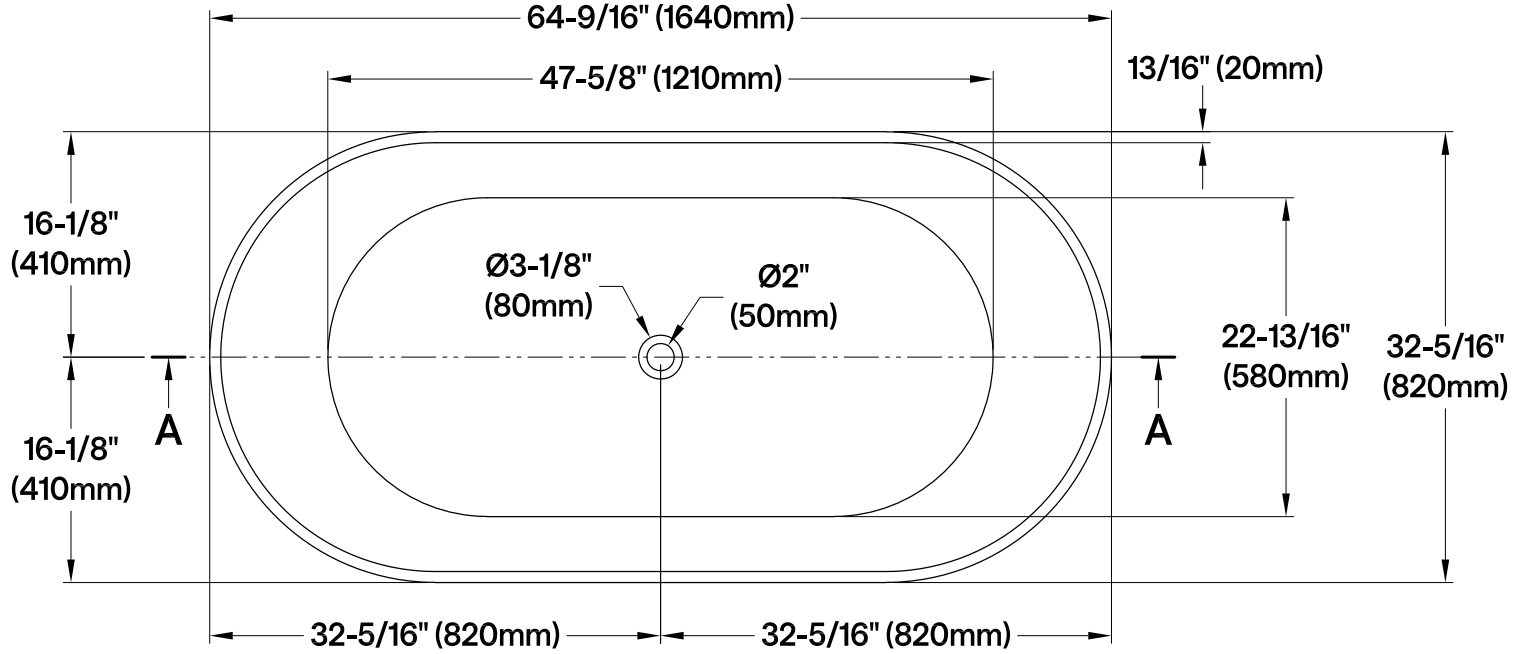

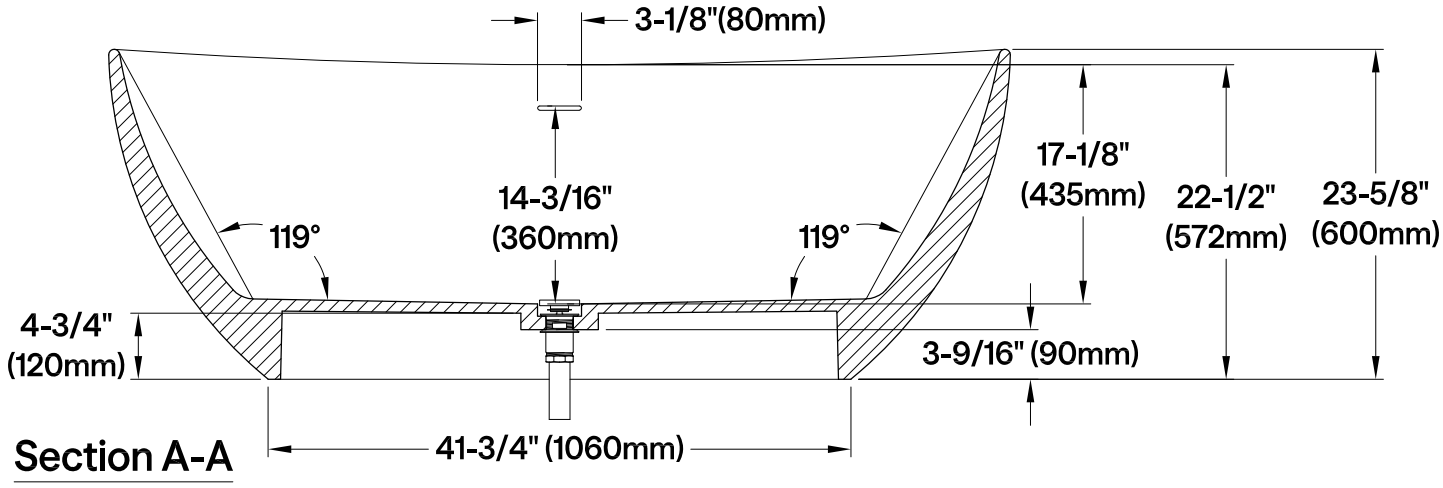

Section A-A

2026-04-B