RANGE
OUTDOOR LIVING

Manufactured by:
Range Outdoor Living
3305 Airport Drive, Pittsburg, KS 66762
833-689-8428

*Basepoint Business Centre: Rivermead Drive,Westlea, Swindon SN5 7EX Phone: 0800-118-2476*
*J.P. Coenstraat 7, The Bridge, The Hague, 2595 WP, Netherlands Phone: 08005678990*

# EMORY CORNER OUTDOOR KITCHEN ISLAND AND BAR - RIGHT

## MODEL #: 2504189B, 2601161B

**⚠ WARNING**
Cancer and Reproductive Harm
www.P65Warnings.ca.gov

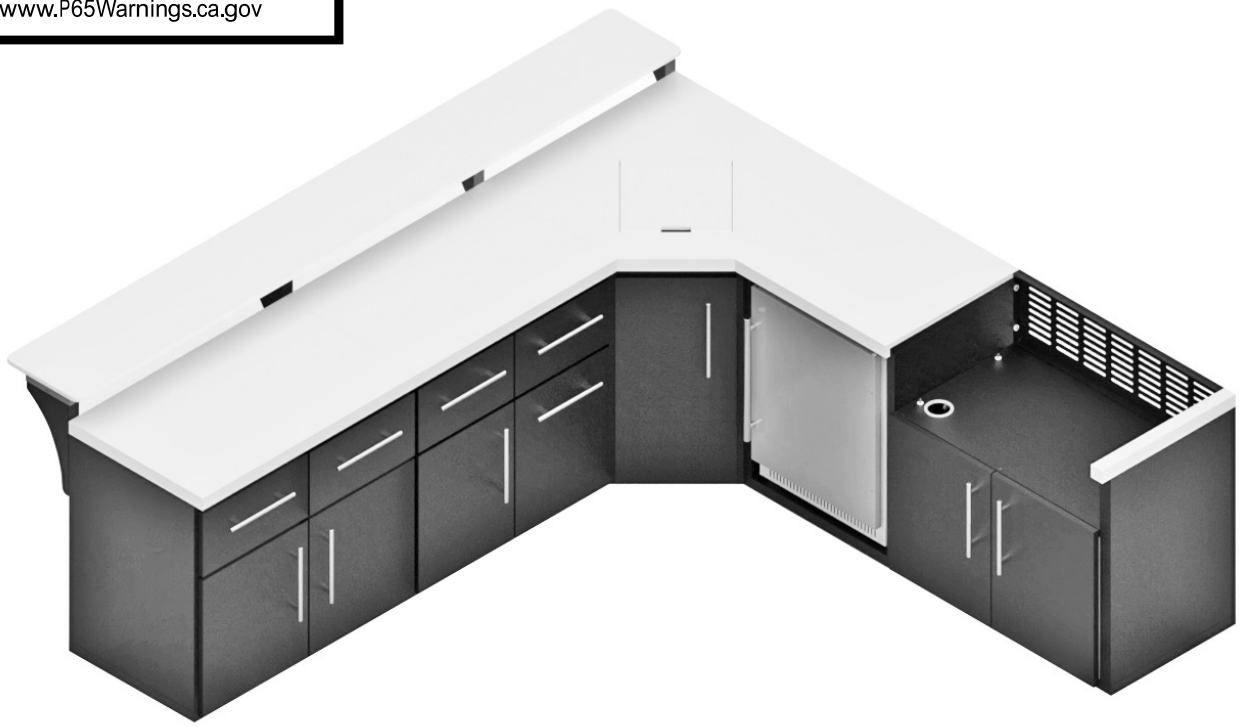

**Please visit www.rangeoutdoorliving.com**
**For the most up to date assembly manual, to register your product, or to order replacement parts Para obtener instrucciones en español, visite www.rangeoutdoorliving.com**

---

BILT®

EASY STEP-BY-STEP
**3D INTERACTIVE INSTRUCTIONS**
**DOWNLOAD THE FREE APP**

Download on the App Store | GET IT ON Google Play

# OWNER'S MANUAL - BASIC SETUP DIMENSIONS & ASSEMBLY NOTES

**It is critically important that you start with square and level footings or concrete pad to attach your structure.**

- **Pay close attention to the items needed for each step. Make sure you are using the correct hardware for each step. Using incorrect hardware may result in improper assembly**
- **Remember to double check for underground utilities and overhead electrical lines**

**Post mounts are provided with your structure which allows you to permanently install your structure to a pre-existing or new wood or concrete surface. See Anchor Instructions for further details and recommendations.**

- **The hardware to attach the post mounts to the structure is included.**
- **The hardware to mount the structure permanently to a concrete surface is included.**
- **The hardware to mount the structure permanently to a wood deck is NOT included and will need to be purchased separately. You must ensure there is ample structural support under the deck before permanently attaching.**

---

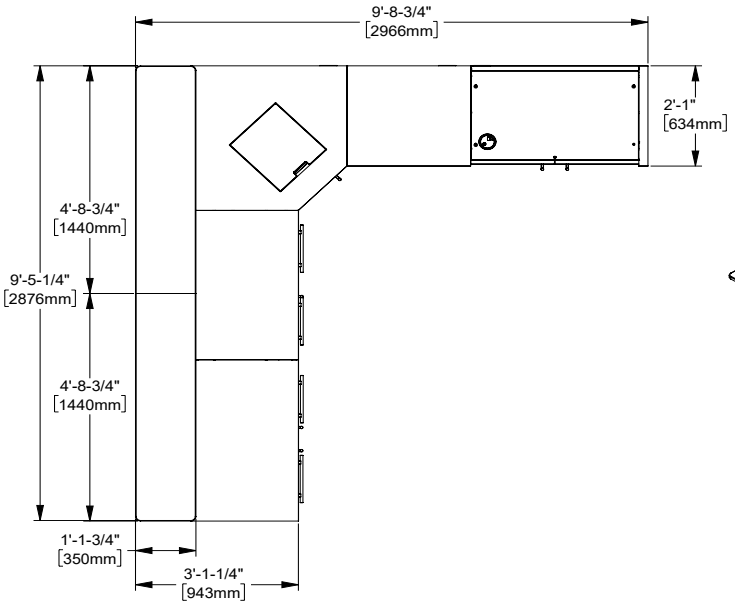


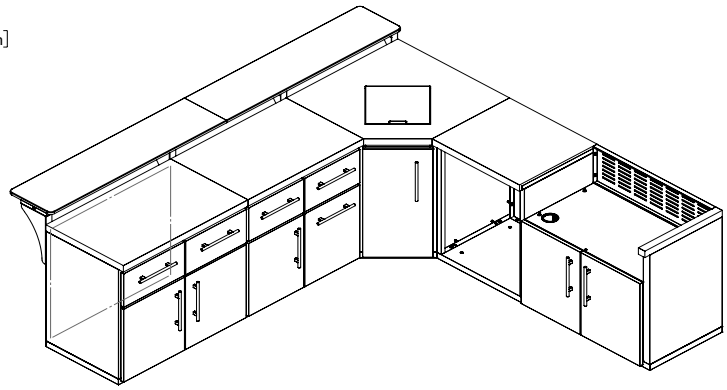

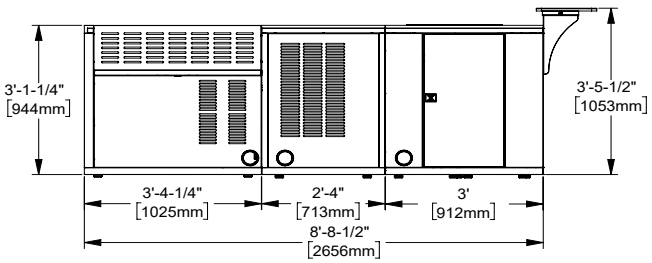


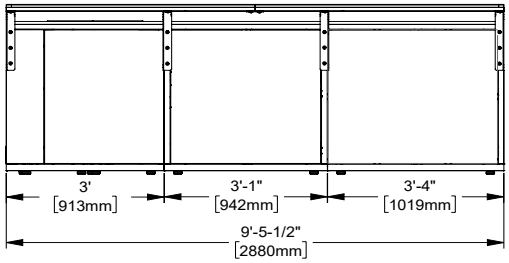


**IMPERIAL MEASURMENTS ROUNDED TO THE NEAREST 1/4"**

# OWNER'S MANUAL - UTILITY LAYOUT

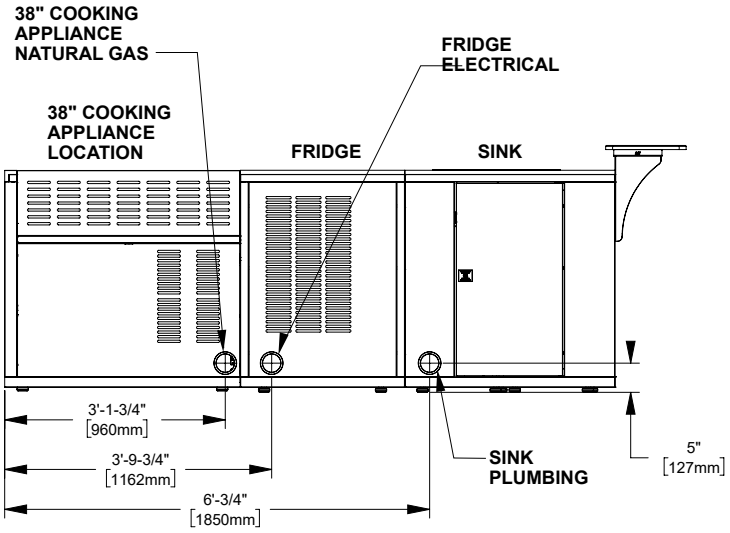


BACK SIDE VIEW

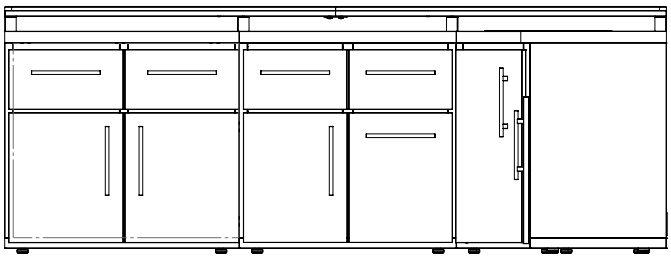

RIGHT SIDE VIEW

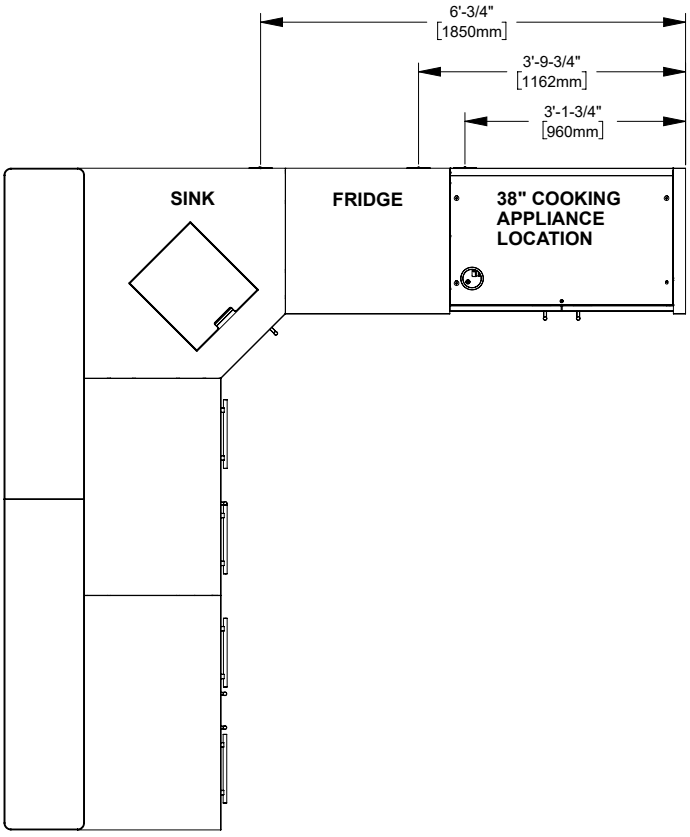


TOP SIDE VIEW

**IMPERIAL MEASURMENTS ROUNDED TO THE NEAREST 1/4"**

# OWNER'S MANUAL - PARTS IDENTIFICATION

METAL COMPONENTS (NOT TO SCALE)

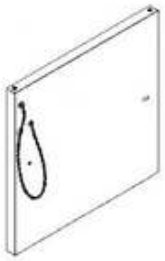

**S6 CABINET SIDE PANEL ASSEMBLY M - A4M03586**
**(x1) 23 3/8"x22 7/8"x1 3/8" (35x581x593)**



**S17 CABINET SIDE PANEL ASSEMBLY M - A4M05647**
**(x1) 33 3/8"x23 3/8"x1 3/8" (35.00x593.20x847.20)**



**S19 CABINET SIDE PANEL ASSEMBLY - A4M04667**
**(x1) 33 7/16"x23 3/8"x2 13/16" (71x594x849)**

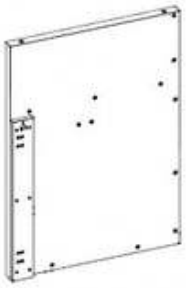

**S20 CABINET SIDE PANEL ASSEMBLY R - A4M04669**
**(x1) 33 3/8"x23 3/8"x2 1/16" (53x594x848)**



**S21 CABINET SIDE PANEL ASSEMBLY L - A4M04670**
**(x1) 33 7/16"x23 3/8"x1 3/8" (35x594x849)**



**S22 CABINET CORNER PANEL ASSEMBLY - A4M04714**
**(x1) 33 3/8"x8 11/16"x8 11/16" (220x220x848)**



**S23 CABINET SIDE PANEL ASSEMBLY R - A4M04704**
**(x1) 33 3/8"x23 3/8"x1 15/16" (49x594x848)**

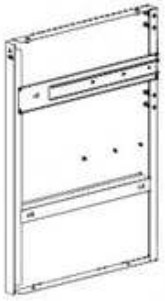

**S24 CABINET SIDE PANEL ASSEMBLY M - A4M04705**
**(x1) 33 3/8"x23 3/8"x2 3/16" (56.2x593x847)**



**S25 CABINET SIDE PANEL ASSEMBLY L - A4M04706**
**(x1) 33 3/8"x23 3/8"x1 3/8" (35.00x594.00x848.20)**



**S26 CABINET SIDE PANEL ASSEMBLY L - A4M04709**
**(x1) 33 3/8"x23 3/8"x1 15/16" (50.00x594.00x848.20)**

# OWNER'S MANUAL - PARTS IDENTIFICATION

METAL COMPONENTS (NOT TO SCALE)

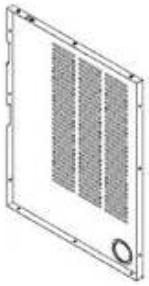

**G4 CABINET BACK PANEL ASSEMBLY - A4M03599**
**(x1) 25 5/16"x33 3/8"x1 3/16" (30x847x643)**

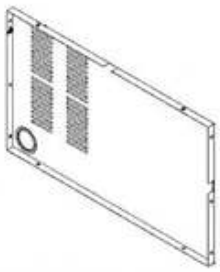

**G10 CABINET BACK PANEL ASSEMBLY - A4M03055**
**(x1) 1 3/16"x22 7/8"x38 3/16" (30x581x970)**

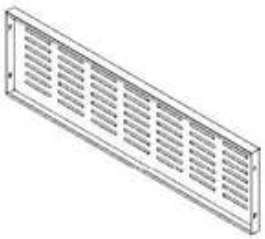

**G11 VENTILATION PANEL - A4M03056**
**(x1) 1 5/16"x11 3/16"x38 3/16" (33x284x970)**



**G12 CABINET BACK PANEL ASSEMBLY - A4M03691**
**(x1) 38 3/4"x33 3/8"x1 3/16" (30x847x984)**

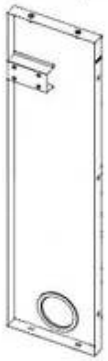

**G13 CABINET BACK PANEL ASSEMBLY - A4M04715**
**(x1) 33 3/8"x8 1/2"x1 3/16" (30x215x848)**



**G14 CABINET BACK PANEL ASSEMBLY - A4M04716**
**(x1) 27 5/16"x33 3/8"x1 3/16" (30x847x693)**

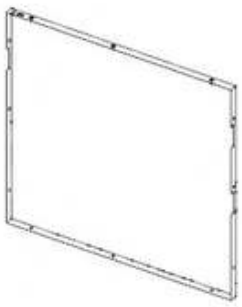

**G15 CABINET BACK PANEL ASSEMBLY - A4M04707**
**(x1) 34 5/16"x33 3/8"x1 3/16" (30x847x1049)**

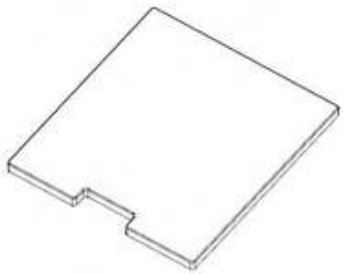

**M5 SINK COVER COUNTERTOP - A4M05949**
**(x1) 11/16"x14 3/4"x16 5/16" (18x375x415)**



**M10 COUNTERTOP - A4M05957**
**(x1) 40 3/16"x24 15/16"x1 15/16" (50x634x1020)**



**M11 COUNTERTOP - A4M05952**
**(x1) 24 15/16"x2 1/16"x11/16" (18x53x634)**

# OWNER'S MANUAL - PARTS IDENTIFICATION

METAL COMPONENTS (NOT TO SCALE)



**M12 COUNTERTOP - A4M05955**
**(x1) 37 3/16"x24 15/16"x1 15/16" (50x634x944)**



**M13 COUNTERTOP - A4M05953**
**(x1) 28 1/8"x24 15/16"x1 15/16" (50x634x715)**

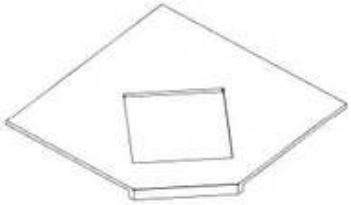

**M14 COUNTERTOP - A4M05954**
**(x1) 36"x36"x1 15/16" (50x914x914)**



**M15 COUNTERTOP - A4M05958**
**(x1) 56 11/16"x13 3/4"x11/16" (18x350x1440)**



**M22 COUNTERTOP - A4M05956**
**(x1) 56 11/16"x13 3/4"x11/16" (18x350x1440)**

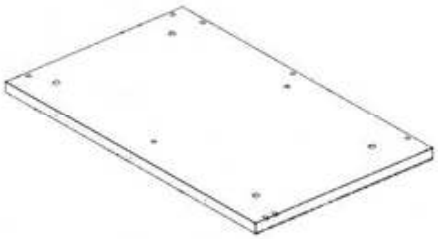

**T12 CABINET TABLETOP ASSEMBLY - A4M03693**
**(x1) 39 7/16"x24 1/8"x1 1/4"1 1/4" (32x612x1001)**

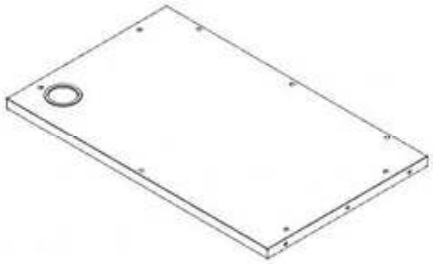

**T13 TABLETOP ASSEMBLY - A4M04668**
**(x1) 1 1/4"x23 3/8"x38 3/16" (32x594x970)**

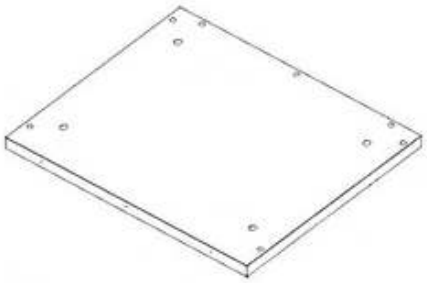

**T14 CABINET TABLETOP PANEL ASSEMBLY - A4M04701**
**(x1) 28 1/8"x24 1/8"x1 1/4" (32x612x715)**

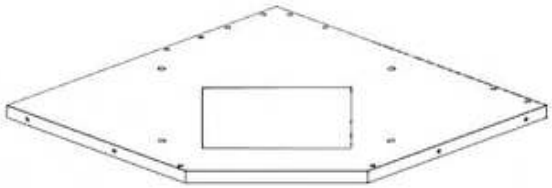

**T15 CABINET TABLETOP FRAME - A4M04713**
**(x1) 36"x914.00x1 1/4" (32x914x914)**

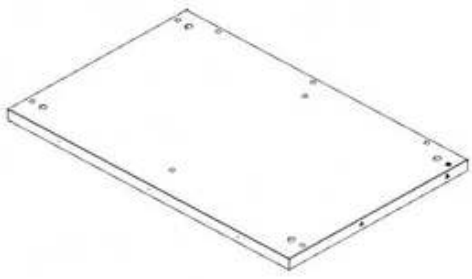

**T16 CABINET TABLETOP ASSEMBLY - A4M04708**
**(x1) 37 3/16"x24 1/8"x1 1/4" (32x612x944)**

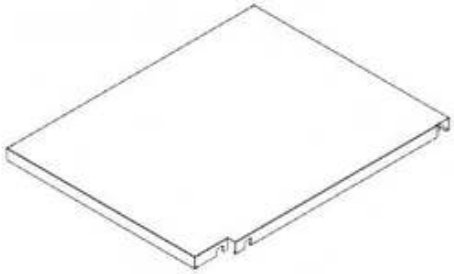

**L2 CABINET SHELF ASSEMBLY - A4M03589**
**(x1) 23 1/4"x18 3/8"x1" (25x467x591)**

# OWNER'S MANUAL - PARTS IDENTIFICATION

METAL COMPONENTS (NOT TO SCALE)

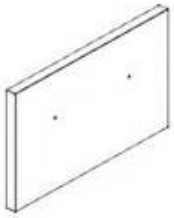

**D3 CABINET DRAWER PANEL ASSEMBLY - A4M03569**
**(x2) 17 3/4"x10 1/4"x15/16" (24x260x451)**

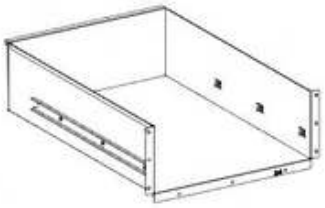

**D4 CABINET DRAWER BODY ASSEMBLY - A4M03571**
**(x2) 22 1/4"x16 1/16"x6 7/16" (164x408x565)**



**D6 CABINET DOOR ASSEMBLY L - A4M03577**
**(x1) 22 1/4"x17 13/16"x15/16" (24x452x565)**



**D7 CABINET DOOR ASSEMBLY L - A4M03587**
**(x1) 24 13/16"x19 1/16"x15/16" (24x484x630)**



**D8 CABINET DOOR ASSEMBLY R - A4M03590**
**(x1) 24 13/16"x19 1/16"x15/16" (24x484x630)**

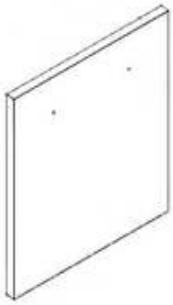

**D9 TRASH CAN PANEL ASSEMBLY - A4M03608**
**(x1) 22 1/4"x17 3/4"x15/16" (24x451x565)**



**D17 CABINET DOOR ASSEMBLY - A4M03682**
**(x1) 33 7/8"x18 1/4"x15/16" (23x463x860)**

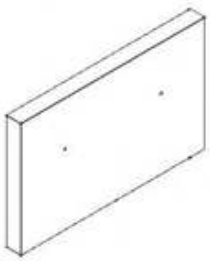

**D18 DRAWER PANEL ASSEMBLY L - A4M03696**
**(x1) 19 9/16"x10 1/4"x15/16" (24x260x498)**

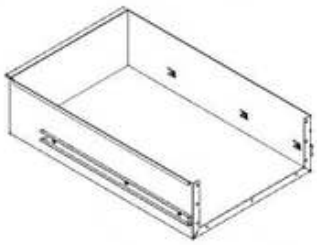

**D19 DRAWER BODY ASSEMBLY - A4M03698**
**(x2) 22 1/4"x17 3/4"x5 3/4" (145x450x565)**



**D20 DOOR PANEL ASSEMBLY L - A4M03701**
**(x1) 22 1/4"x19 5/8"x15/16" (24x498.28x565.50)**

# OWNER'S MANUAL - PARTS IDENTIFICATION

METAL COMPONENTS (NOT TO SCALE)



**D21 DOOR PANEL ASSEMBLY R - A4M03703**
**(x1) 22 1/4"x19 5/8"x15/16" (24x498x565)**

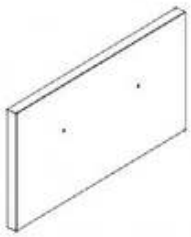

**D22 DRAWER PANEL ASSEMBLY R - A4M03706**
**(x1) 19 9/16"x10 1/4"x15/16" (24x260x498)**



**D23 CABINET FRONT DOOR ASSEMBLY - A4M04720**
**(x1) 33 1/16"x16 1/16"x15/16" (24x408x840)**

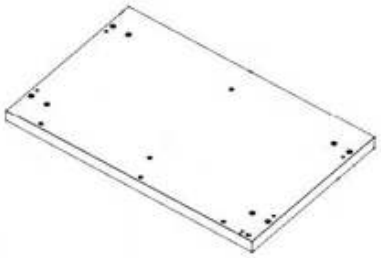

**F3 CABINET FLOOR PANEL ASSEMBLY - A4M03560**
**(x1) 37 3/16"x23 3/8"x2 5/8" (66x594x944)**

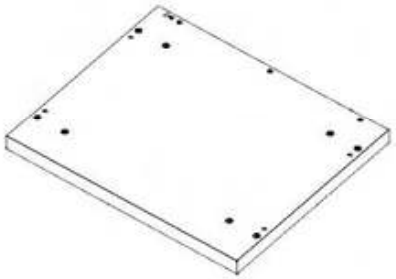

**F4 CABINET FLOOR PANEL ASSEMBLY - A4M03595**
**(x1) 28 1/8"x23 3/8"x2 5/8" (66x594x715)**



**F7 CABINET FLOOR ASSEMBLY - A4M03687**
**(x1) 40 3/16"x23 3/8"x2 5/8" (66x594x1020)**

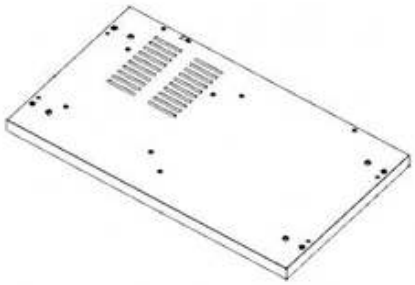

**F8 CABINET FLOOR PANEL ASSEMBLY - A4M04664**
**(x1) 2 5/8"x23 3/8"x40 3/8" (66x594x1025)**

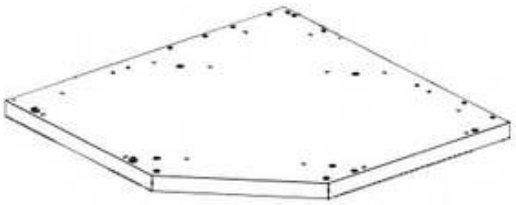

**F9 CABINET FLOOR PANEL ASSEMBLY - A4M04702**
**(x1) 36"x36"x2 5/8" (66x914x914)**



**L8 SHELF - A4M05644**
**(x1) 23 1/4"x16 1/4"x1" (25x412x591)**

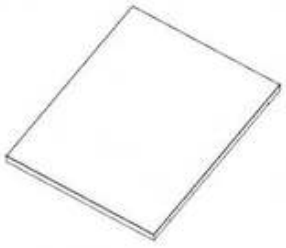

**L9 SHELF - A4M05645**
**(x1) 23 1/4"x18 1/4"x1" (25x463x591)**



**L11 SHELF - A4M05648**
**(x1) 23 1/4"x19"x1" (25x482x591)**

# OWNER'S MANUAL - PARTS IDENTIFICATION

METAL COMPONENTS (NOT TO SCALE)

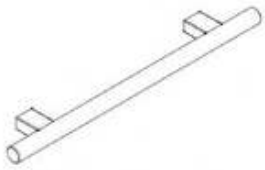

**H2 STAINLESS STEEL HANDLE - A4M03024**
**(x11) 5/8"x1 9/16"x11 13/16" (16x40x300)**

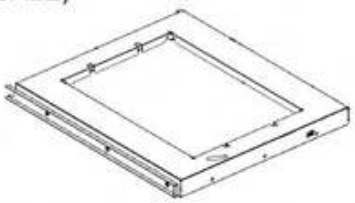

**H3 TRASH CAN BRACKET ASSEMBLY - A4M03610**
**(x1) 18 1/16"x15 13/16"x1 3/8" (35x401x458)**

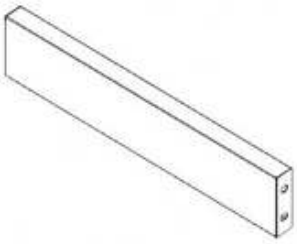

**H4 CABINET HORIZONTAL BEAM ASSEMBLY - A4M03575**
**(x4) 16 1/4"x3 3/8"x1" (25x85x413)**



**H11 DRAWER FIXING PIECE ASSEMBLY - A4M03692**
**(x1) 5 3/8"x1 1/16"x11/16" (17x27x137)**

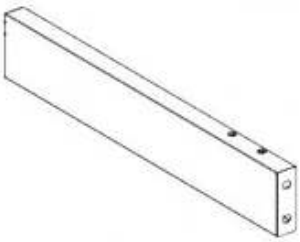

**H12 HORIZONTAL BEAM ASSEMBLY - A4M03695**
**(x4) 18 1/4"x2 15/16"x1" (25x75x464)**

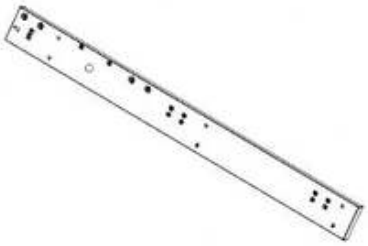

**H13 HINGE CHANNEL ASSEMBLY - A4M03700**
**(x1) 33 3/8"x2 15/16"x11/16" (18x74x847)**

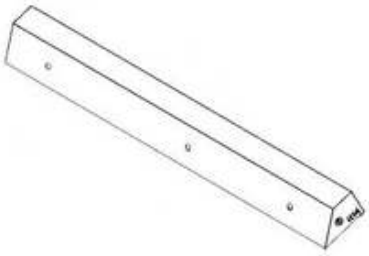

**H14 CABINET FRONT DOOR BRACKET ASSEMBLY - A4M04717**
**(x1) 33 3/8"x3 1/4"x1 3/4" (45x83x848)**

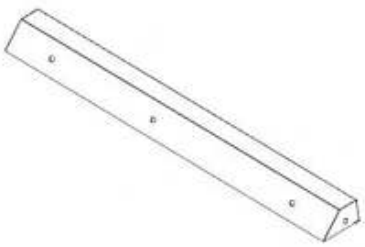

**H15 CABINET FRONT DOOR HINGE BRACKET ASSEMBLY - A4M04718**
**(x1) 33 3/8"x3 1/4"x1 3/4" (45x83x848)**

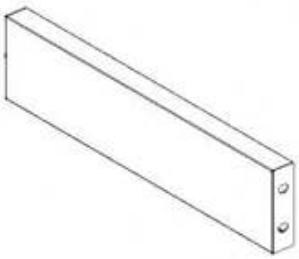

**H16 CABINET HORIZONTAL BEAM ASSEMBLY - A4M04719**
**(x1) 14 5/8"x3 3/8"x1" (25x85x372)**



**9240162 OUTDOOR KITCHEN FRIDGE - RIGHT OPEN**
**(x1)**



**A4M03025 FULL OVERLAY HINGE**
**(x12)**



**A4M03151 GARDEN HOSE ADAPTER**
**(x1)**

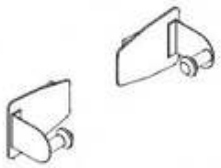

**A4M02290 MAGNETIC PAPER TOWEL HOLDER**
**(x1)**

# OWNER'S MANUAL - PARTS IDENTIFICATION

METAL COMPONENTS (NOT TO SCALE)



**A2 MAGNET BRACKET - A4M03026**
**(x7) 1"x1 1/4"x3 1/8" (25x31x80)**

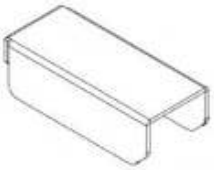

**A5 SHELF BRACKET - A4M03141**
**(x14) 5/8"x7/8"x2 1/16" (16x22x53)**

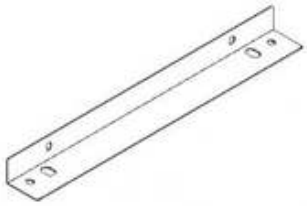

**A6 ANGLED BRACKET - A4M03053**
**(x4) 1 3/8"x1 15/16"x17 1/8" (35x50x435)**



**A9 HOSE BRACKET ASSEMBLY - A4M03060**
**(x1) 1 1/4"x1 7/16"x2 9/16" (31x36x65)**

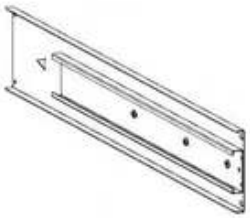

**A10 SLIDE BRACKET ASSEMBLY - A4M03083**
**(x1) 15/16"x3 3/8"x22 5/8" (23x85x575)**



**A11 TRIANGLE PANEL - A4M03086**
**(x2) 13/16"x13 3/4"x13 3/4" (20x350x350)**

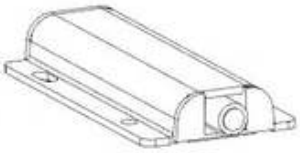

**A12 DOOR STOPPER - A4M04128**
**(x1) 3 11/16"x1 3/4"x1/2" (13x45x94)**



**A13 GAS TANK HOLDER ASSEMBLY - A4M03047**
**(x1) 1 15/16"x12 7/8"x14 3/4" (49x327x374)**

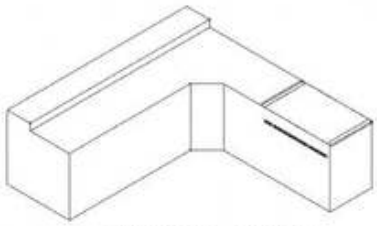

**A6P01438 COVER**
**(x1)**



**A14 COUNTERTOP BRACKET ASSEMBLY - A4M04846**
**(x1) 24 3/16"x1 3/8"x1 1/4" (31x35x614)**

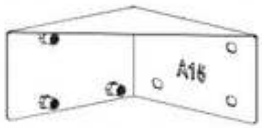


**A15 DOOR STOPPER BRACKET ASSEMBLY - A4M04480**
**(x1) 3 15/16"x3 3/4"1 15/16" (50x95x100)**

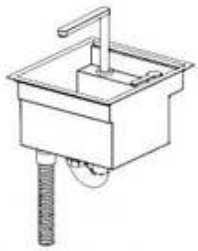

**A16 SINK ASSEMBLY - A4M03143**
**(x1) 15 1/8"x15 5/16"x16 7/8" (384x389x429)**

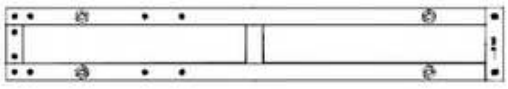

**A17 SUPPORT FRAME ASEEMBLY - A4M04723**
**(x2) 54 1/2"x8 1/4"x1" (25x210x1384.8)**

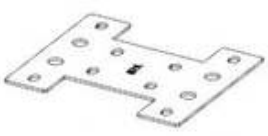

**A18 SUPPORT FRAME CONNECTING PIECE - A4M04724**
**(x1) 1/8"x7 1/16"x8 1/4" (3x180x210)**

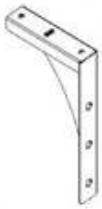

**A19 TRIANGLE BRACKET L - A4M04727**
**(x2) 14 11/16"x7 7/8"x1 15/16" (50x200.00x373.1)**



**A20 TRIANGLE BRACKET R - A4M04728**
**(x2) 14 11/16"x7 7/8"x1 15/16" (50x200x373)**

# OWNER'S MANUAL - PARTS IDENTIFICATION

HARDWARE COMPONENTS

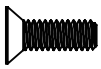

**H101185 | PHILLIPS FLAT HEAD**
(x72)| 8-32x.5

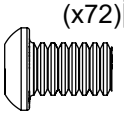

**H101292 | TORX PAN HEAD**
(x30) | 1/4-20x13/32"



**H101289 | PAN HEAD SCREW**
(x85) | 8-32x1/2" SS

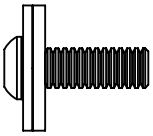

**H101202 | TORX PAN HEAD**
(x174) | 1/4-20x3/4 ASSY

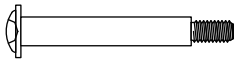

**H101307 | SHOULDER BOLT**
(x22) | 8-32x30mm SS

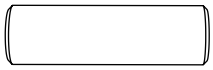

**H101404 | TORX SOCKET SCREW**
(x4) | 5/16-18x1 1/16"

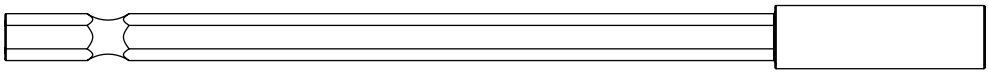

**H101278 | MAGNETIC DRIVER EXTENSION**
(x1) | 6"

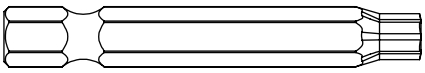

**H100147 | TORX BIT**
(x1) | T-30

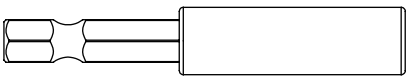

**H101100 | MAGNETIC DRIVER**
(x1) |

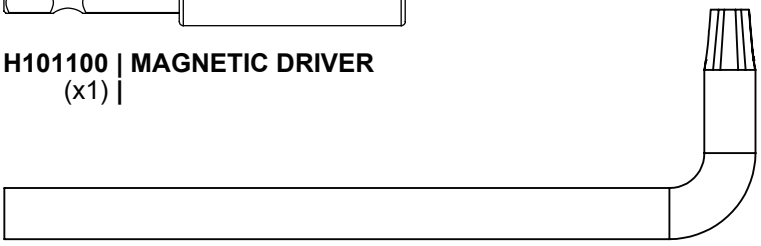

**H100114 | TORX BIT**
(x1) | T-30



**H101287 | PAN HEAD SCREW**
(x6) | 8-32x1" SS

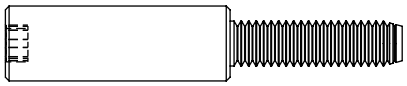

**H101103 | TORX SOCKET SCREW**
(x39) | 1/4-20

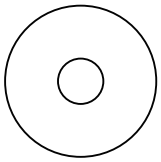

**H101053 | STEEL WASHER**
(x26)| 6x20

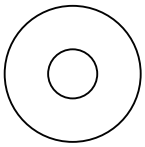

**H101054 | SEALANT WASHER**
(x26) | 6.5x18

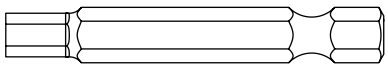

**H101294 | HEX DRIVER**
(x1) |

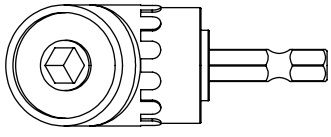

**H101114 | RIGHT ANGLE**
(x1) | **DRILL ADAPTER**

# PRE-ASSEMBLY STEP 1 - SORTING PARTS

**It is critical for ease of assembly that you take the time to sort and organize the parts and hardware.**

---

## METAL PARTS:

- Organize metal parts by the three-digit, alpha-numeric number stamped on each part (ex. P01).
- If there are multiple parts with the same stamped number, stack those pieces together.
- Stamps can be found on the flat surface of the parts or on the end of the parts.
- Allow yourself plenty of room - the parts can take up a significant amount of space.

## WOOD PARTS:

- Organize wood parts by the three-digit, alpha-numeric number stamped on each board (ex. P01).
- If there are multiple boards with the same stamped number, stack those pieces together.
- Stamps can be found on the flat surface of the boards or on the end of the boards.
- Allow yourself plenty of room - the wood pieces can take up a significant amount of space.

**NOTE: CARTONS ARE NOT ORGANIZED BY PART OR STEP NUMBER.**




---

## HARDWARE PARTS:

- We recommend that you have a separate table to organize the hardware.
- Hardware bags are printed with a seven-digit, alpha-numeric part number.
- You can organize your hardware by part number or group by hardware type (e.g. bolts, nuts, etc.).
- During assembly you only need to reference the last four digits of the number.



# PRE-ASSEMBLY STEP 2 - TOOLS REQUIRED



Cordless Drill or
Electric Drill



Drill Attachments:
Phillips Head



1/8", 3/16", 3/8" &
7/16" Drill Bits



Phillips Screw Driver



Open End Wrench
7/16"



3/8" Drive Ratchet, 1/2" &
7/16" STD Sockets 1/2" & 7/16"
Deep Sockets



Claw Hammer



Rubber Mallet -
Optional



Tape Measure

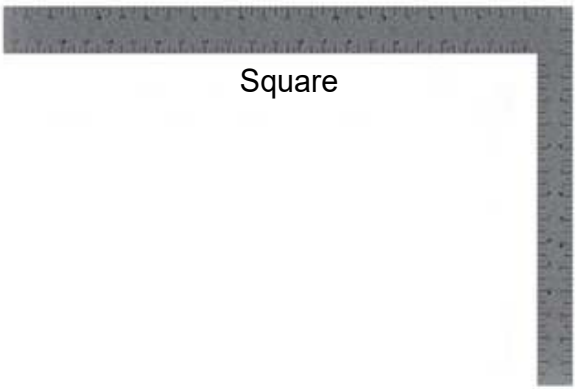

Square



Level 24"

# PRE-ASSEMBLY STEP 3 - CHOOSE YOUR ASSEMBLY METHOD

**<u>There are several types of assembly instructions available to you.</u>**

1. **Printed Assembly Manual included with your set**
2. **BILT APP - 3D interactive instructions**
3. **Combination of the Printed Manual and BILT APP (Note: Step numbers can differ between the two methods)**

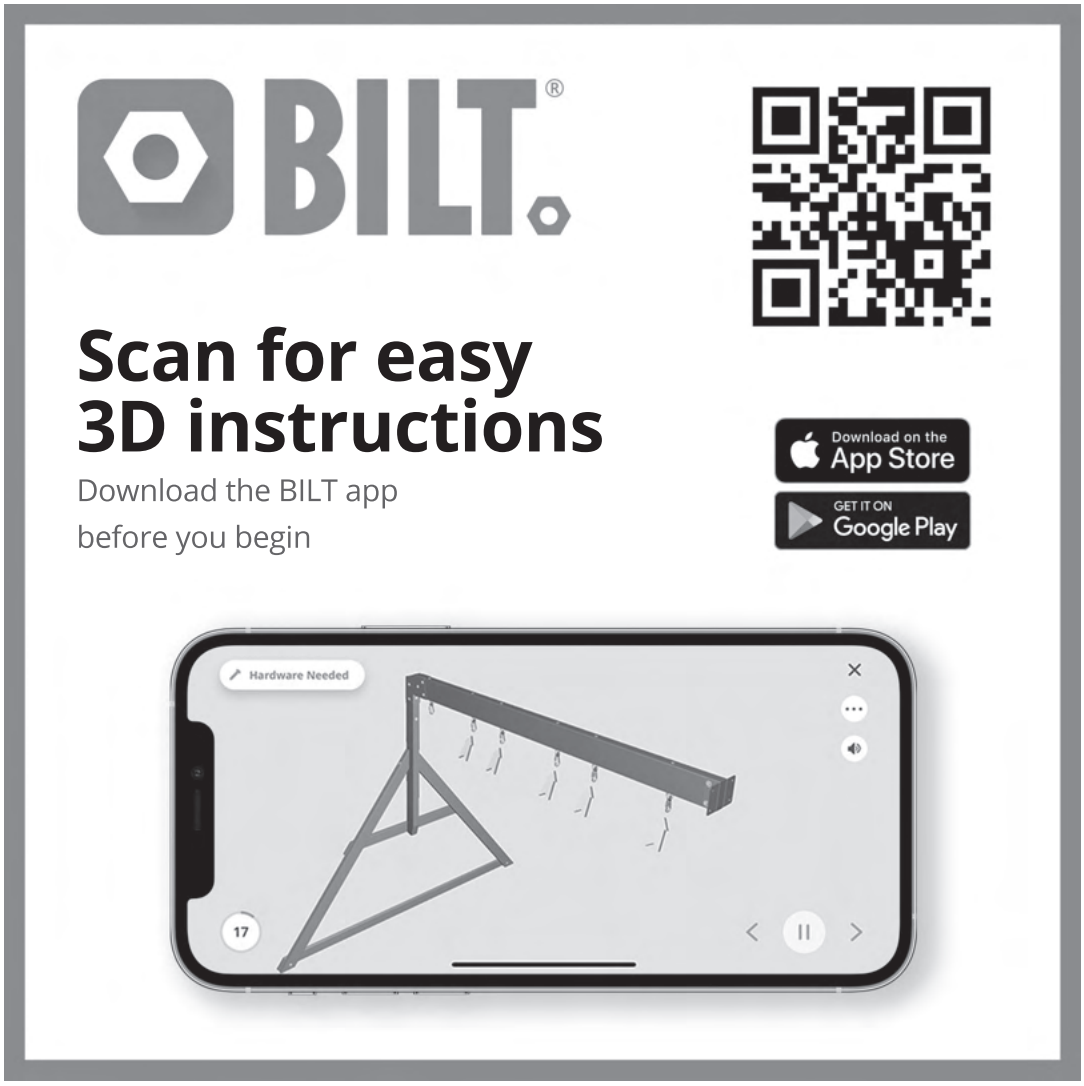

# STEP 1A - CABINET FLOOR PANEL ASSEMBLY

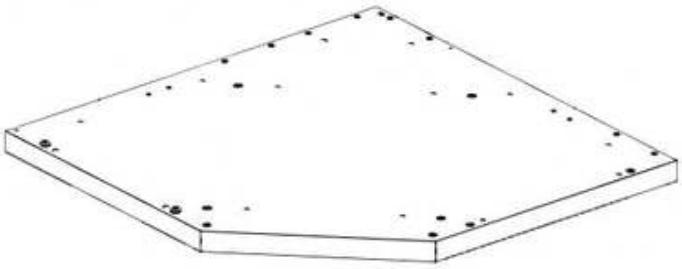

F9 CABINET FLOOR PANEL ASSEMBLY - A4M04702
(x1) 36"x36"x2 5/8" (66x914x914)

- POSITION CABINET FLOOR PANEL IN THE PROXIMITY OF WHERE THE CORNER OF YOUR KITCHEN ISLAND WILL BE.
- EACH FLOOR PANEL HAS FACTORY INSTALLED ADJUSTABLE FEET. USE PROVIDED HEX DRIVER TO ADJUST EACH FOOT UNTIL PANEL IS LEVEL.

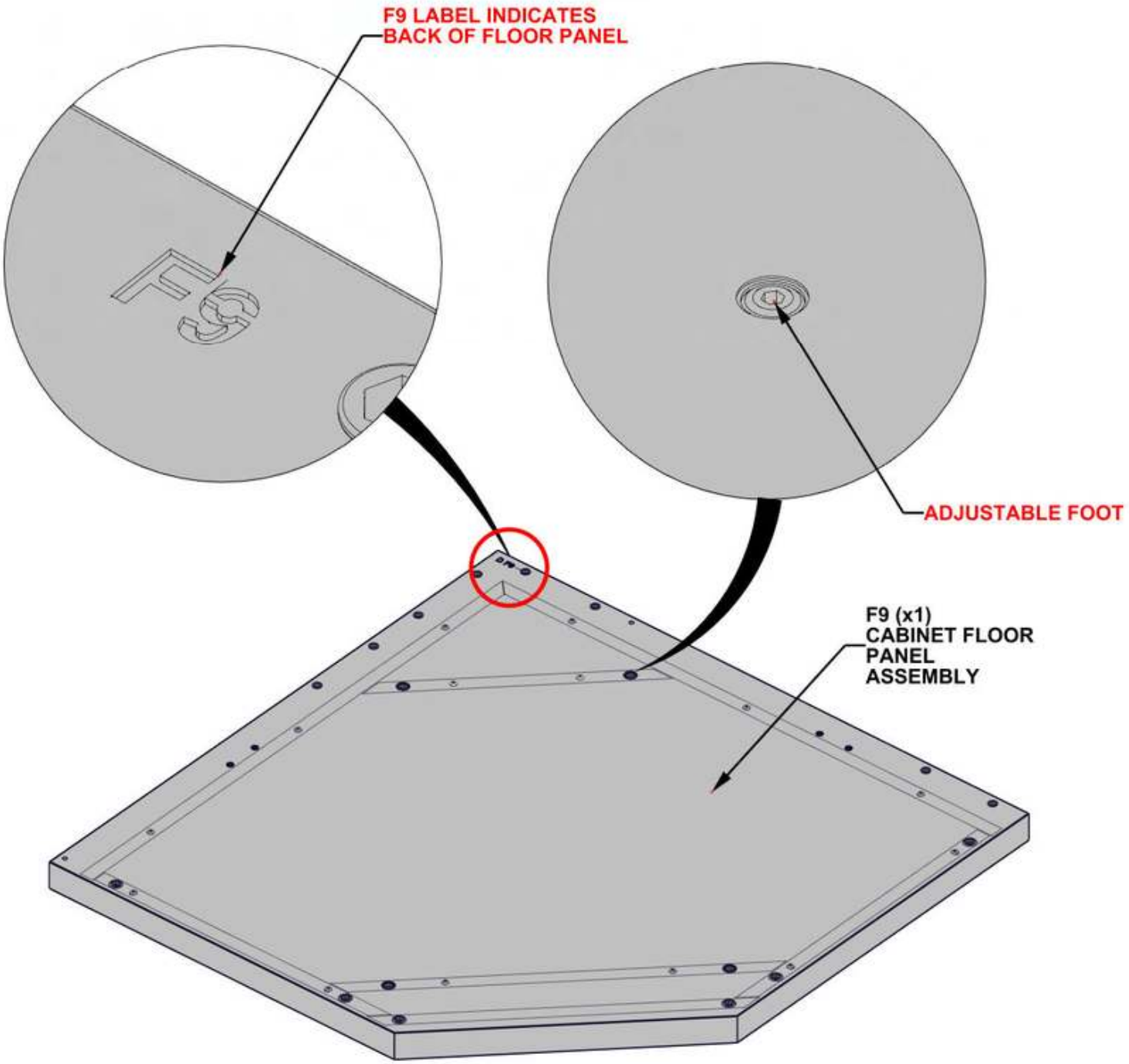

# STEP 1B - CABINET FLOOR PANEL ASSEMBLY

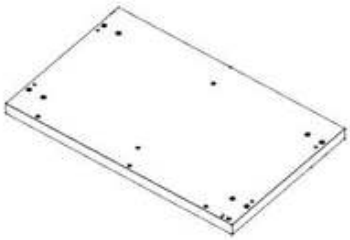

F3 CABINET FLOOR PANEL ASSEMBLY - A4M03560
(x1) 37 3/16"x23 3/8"x2 5/8" (66x594x944)

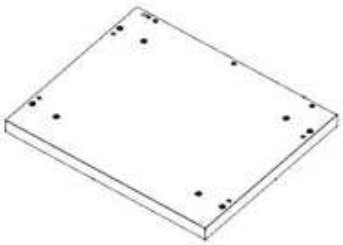

F4 CABINET FLOOR PANEL ASSEMBLY - A4M03595
(x1) 28 1/8"x23 3/8"x2 5/8" (66x594x715)

- POSITION CABINET FLOOR PANELS (F3/F4) AS SHOWN BELOW .
- EACH FLOOR PANEL HAS FACTORY INSTALLED ADJUSTABLE FEET. USE PROVIDED HEX DRIVER TO ADJUST EACH FOOT UNTIL PANEL IS LEVEL.
- FLUSH ALL SIDES OF FLOOR PANELS.

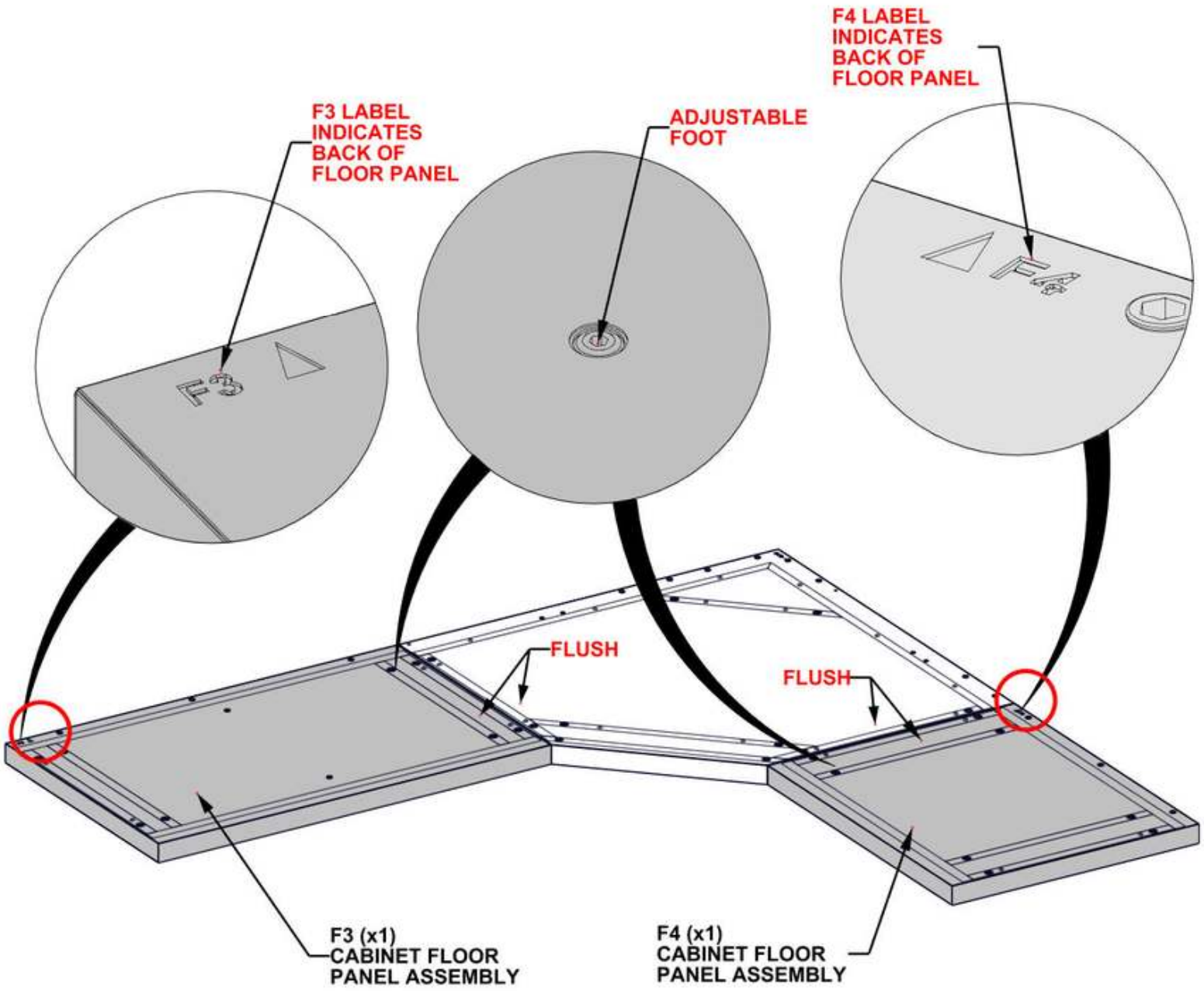

# STEP 2 - SINK CABINET ASSEMBLY

| Qty | PartNo | Description |
|---|---|---|
| 2 | H101202 | TORX PAN HEAD 1/4-20x3/4 ASSY |



**S23 CABINET SIDE PANEL ASSEMBLY R - A4M04704**
**(x1) 33 3/8"x23 3/8"x1 15/16" (49x594x848)**

**- POSITION CABINET SIDE PANEL AS SHOWN BELOW.**
**- FLUSH CABINET SIDE PANEL WITH CABINET FLOOR PANEL.**

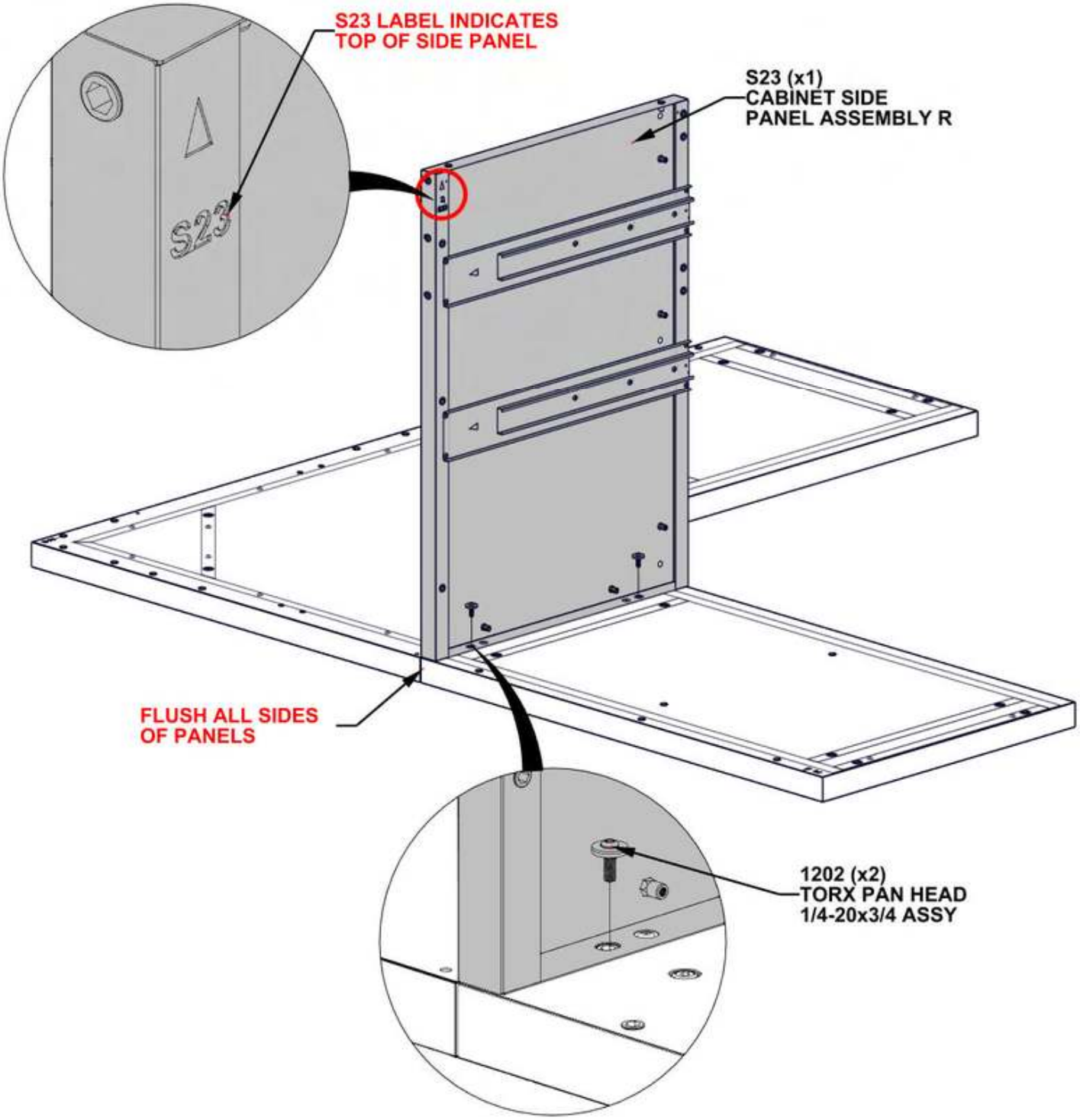

# STEP 3 - SINK CABINET ASSEMBLY

| Qty | PartNo | Description |
|---|---|---|
| 4 | H101202 | TORX PAN HEAD 1/4-20x3/4 ASSY |

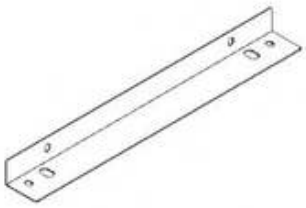

**A6 ANGLED BRACKET - A4M03053**
**(x1) 1 3/8"x1 15/16"x17 1/8" (35x50x435)**

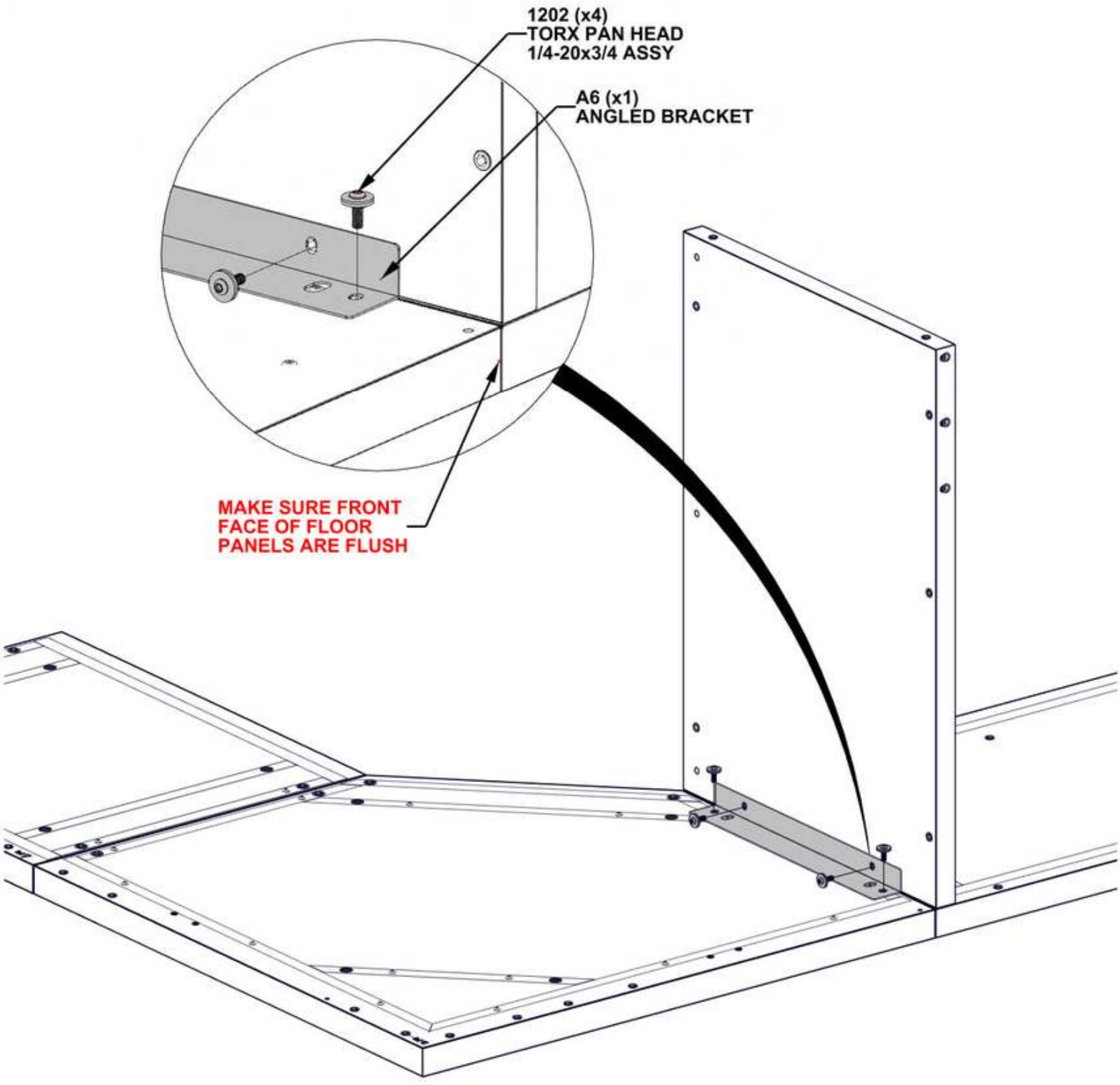

# STEP 4 - SINK CABINET ASSEMBLY

| Qty | PartNo | Description |
|---|---|---|
| 2 | H101202 | TORX PAN HEAD 1/4-20x3/4 ASSY |



**S21 (x1)** **CABINET SIDE PANEL ASSEMBLY L - A4M04670**
**33 7/16"x23 3/8"x1 3/8" (35x594x849)**

**- POSITION CABINET SIDE PANEL AS SHOWN BELOW.**
**- FLUSH CABINET SIDE PANEL WITH CABINET FLOOR PANEL.**

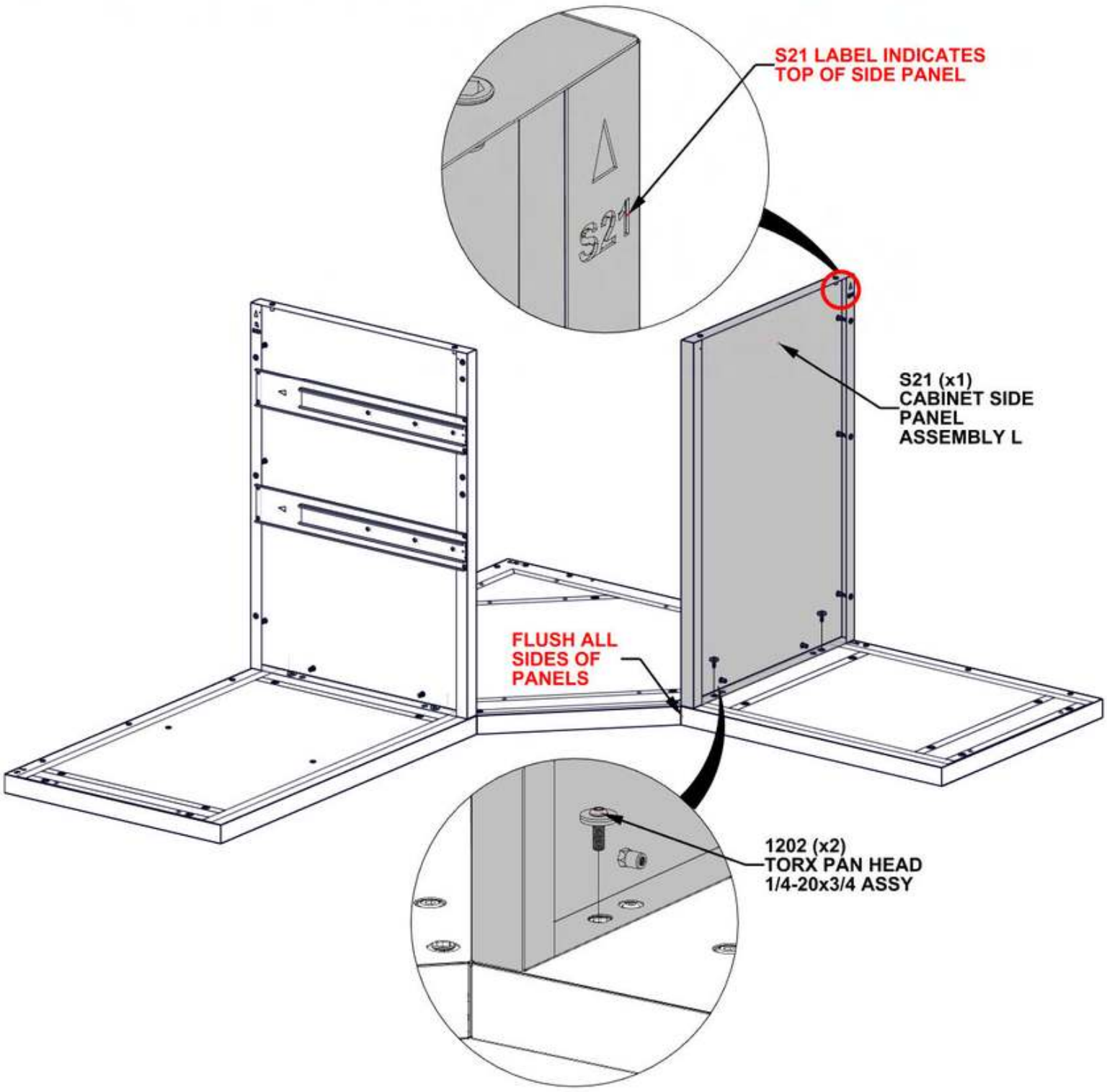

# STEP 5 - SINK CABINET ASSEMBLY

| Qty | PartNo | Description |
|---|---|---|
| 4 | H101202 | TORX PAN HEAD 1/4-20x3/4 ASSY |

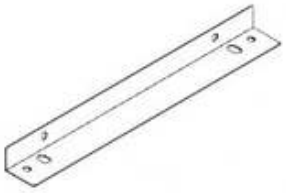

A6 ANGLED BRACKET - A4M03053
(x1) 1 3/8"x1 15/16"x17 1/8" (35x50x435)

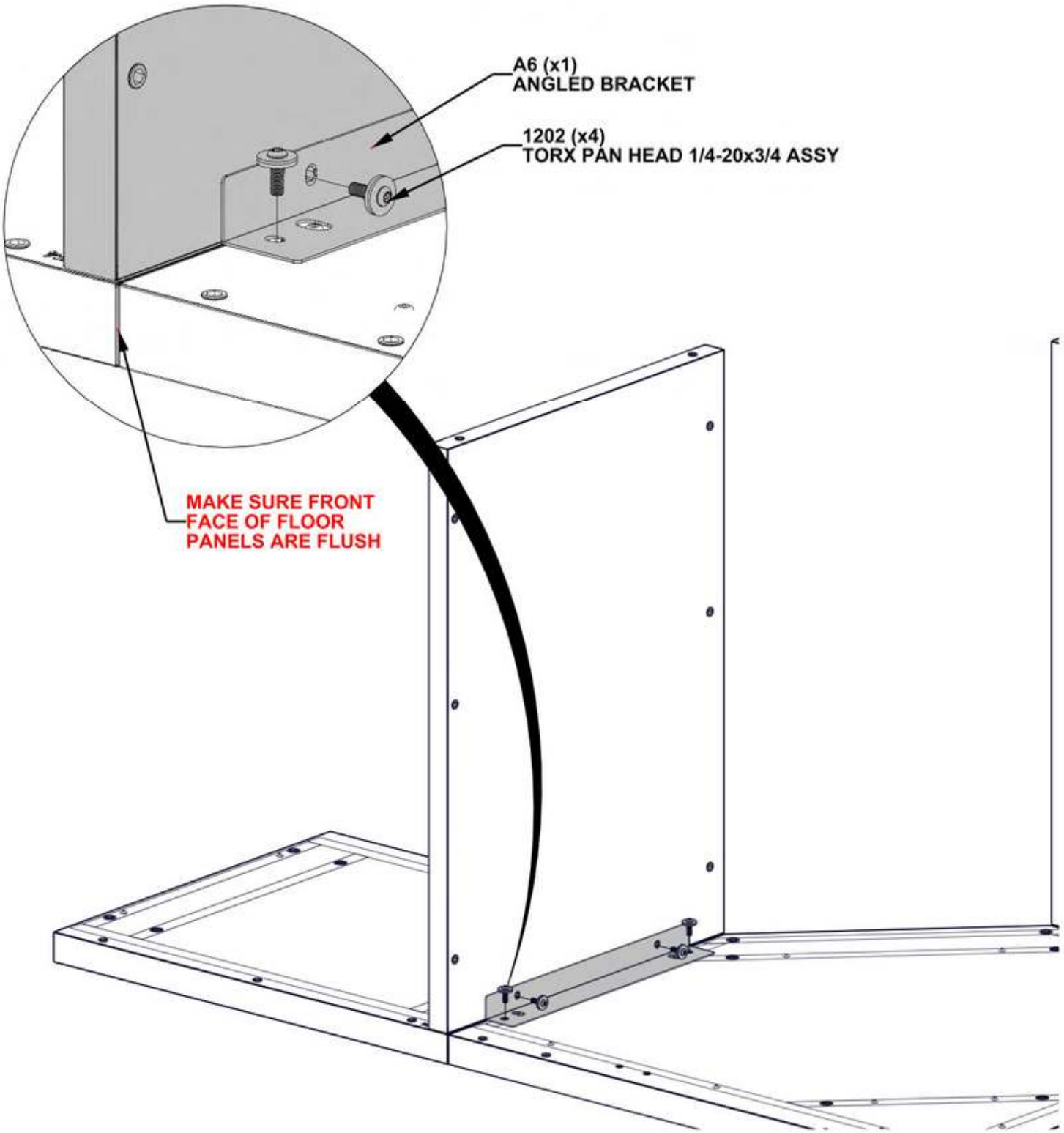

# STEP 6 - SINK CABINET ASSEMBLY

| Qty | PartNo | Description |
|---|---|---|
| 4 | H101202 | TORX PAN HEAD 1/4-20x3/4 ASSY |

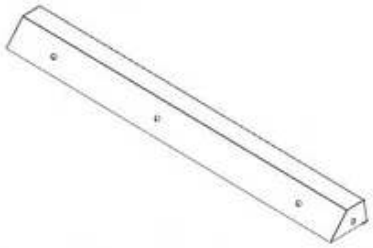

**H15 CABINET FRONT DOOR HINGE BRACKET ASSEMBLY - A4M04718**
**(x1) 33 3/8"x3 1/4"x1 3/4" (45x83x848)**

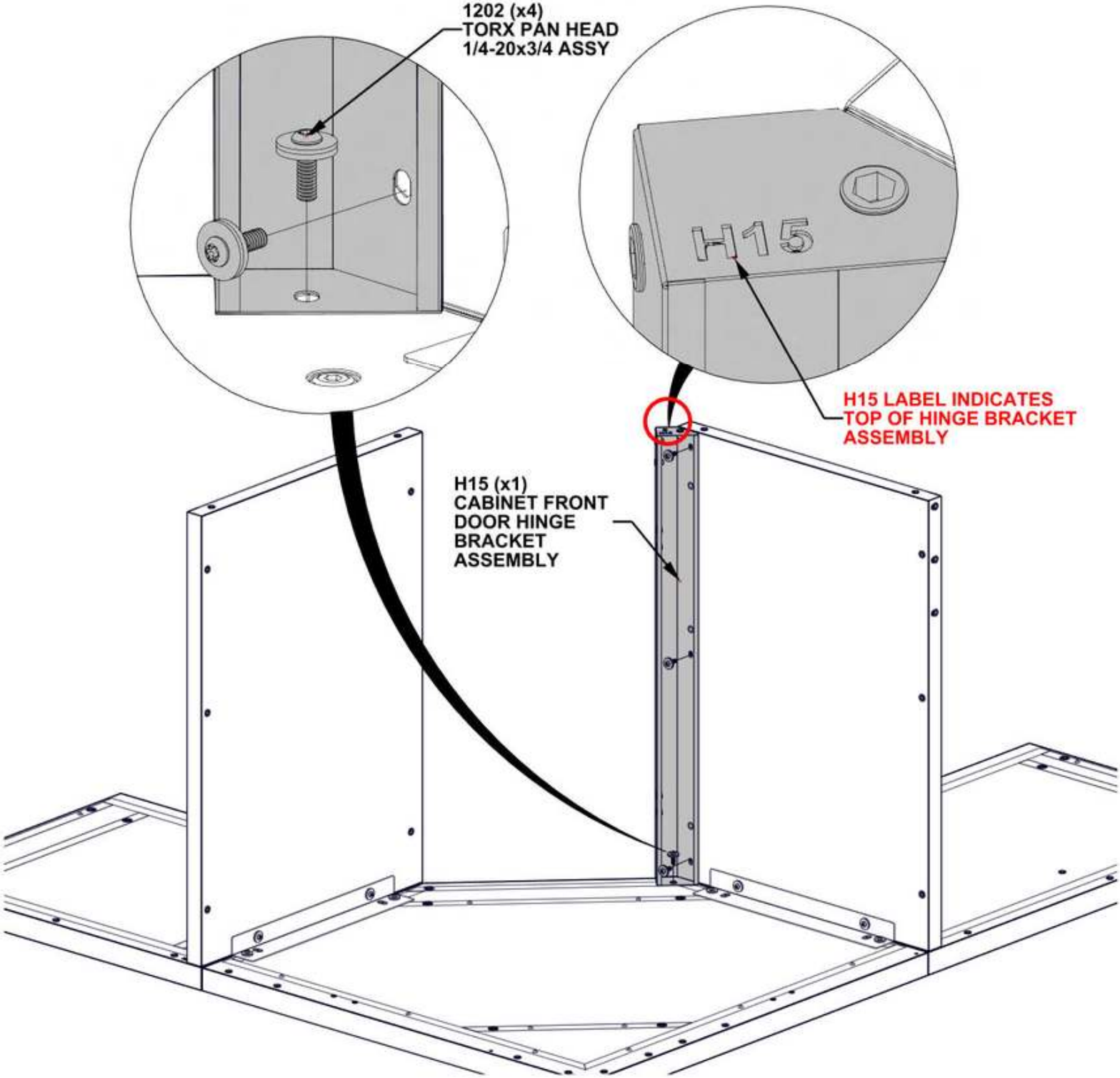

# STEP 7 - SINK CABINET ASSEMBLY

| Qty | PartNo | Description |
|---|---|---|
| 4 | H101202 | TORX PAN HEAD 1/4-20x3/4 ASSY |

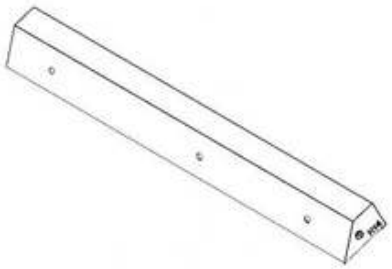

**H14 CABINET FRONT DOOR BRACKET ASSEMBLY - A4M04717**
**(x1) 33 3/8"x3 1/4"x1 3/4" (45x83x848)**

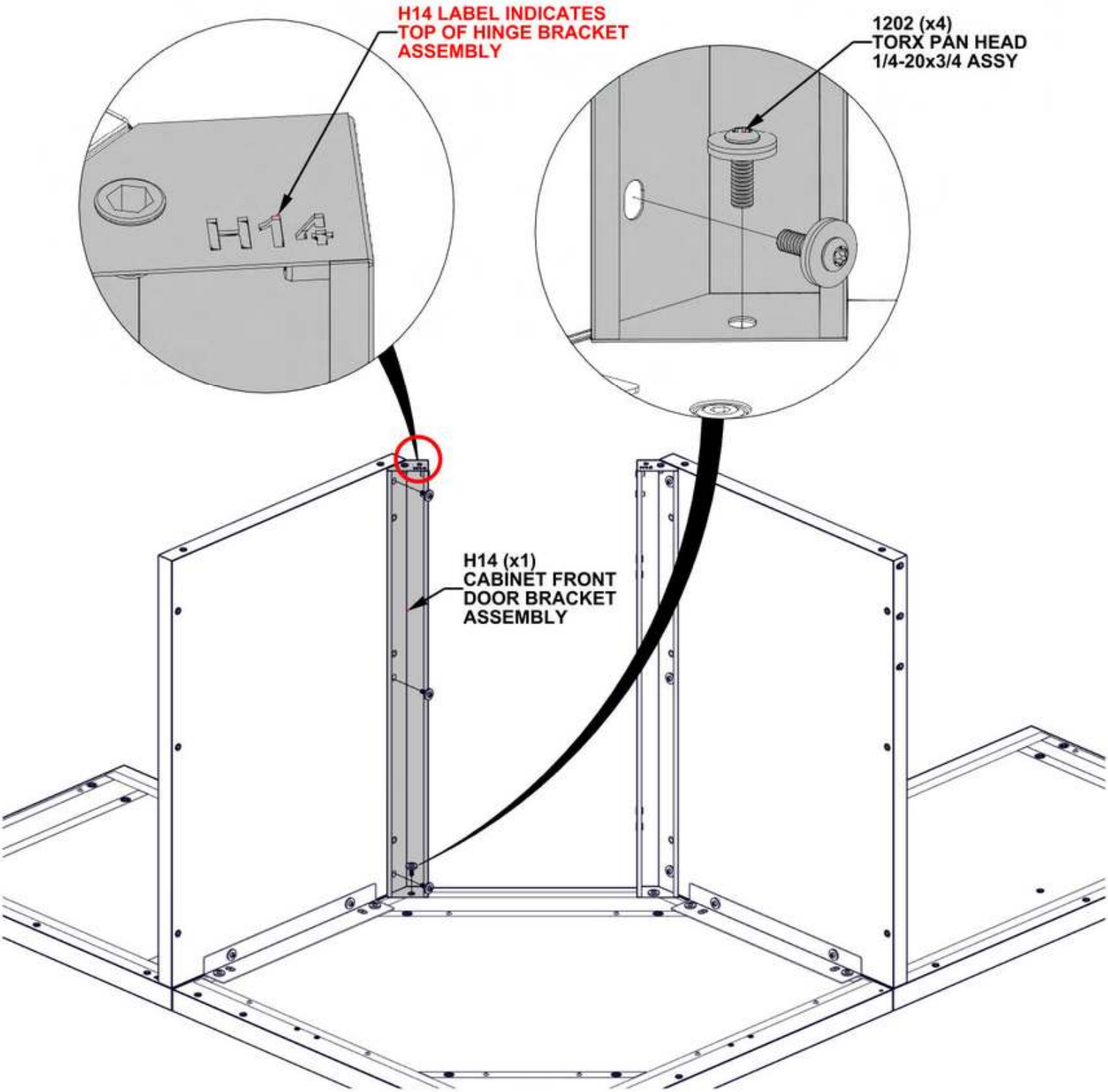

# STEP 8 - SINK CABINET ASSEMBLY

| Qty | PartNo | Description |
|---|---|---|
| 2 | H101289 | PAN HEAD SCREW 8-32x1/2" SS |

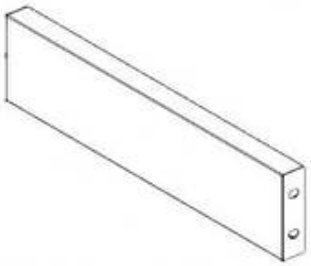

H16 CABINET HORIZONTAL BEAM ASSEMBLY - A4M04719
(x1) 14 5/8"x3 3/8"x1" (25x85x372)



A2 MAGNET BRACKET - A4M03026
(x1) 1"x1 1/4"x3 1/8" (25x31x80)

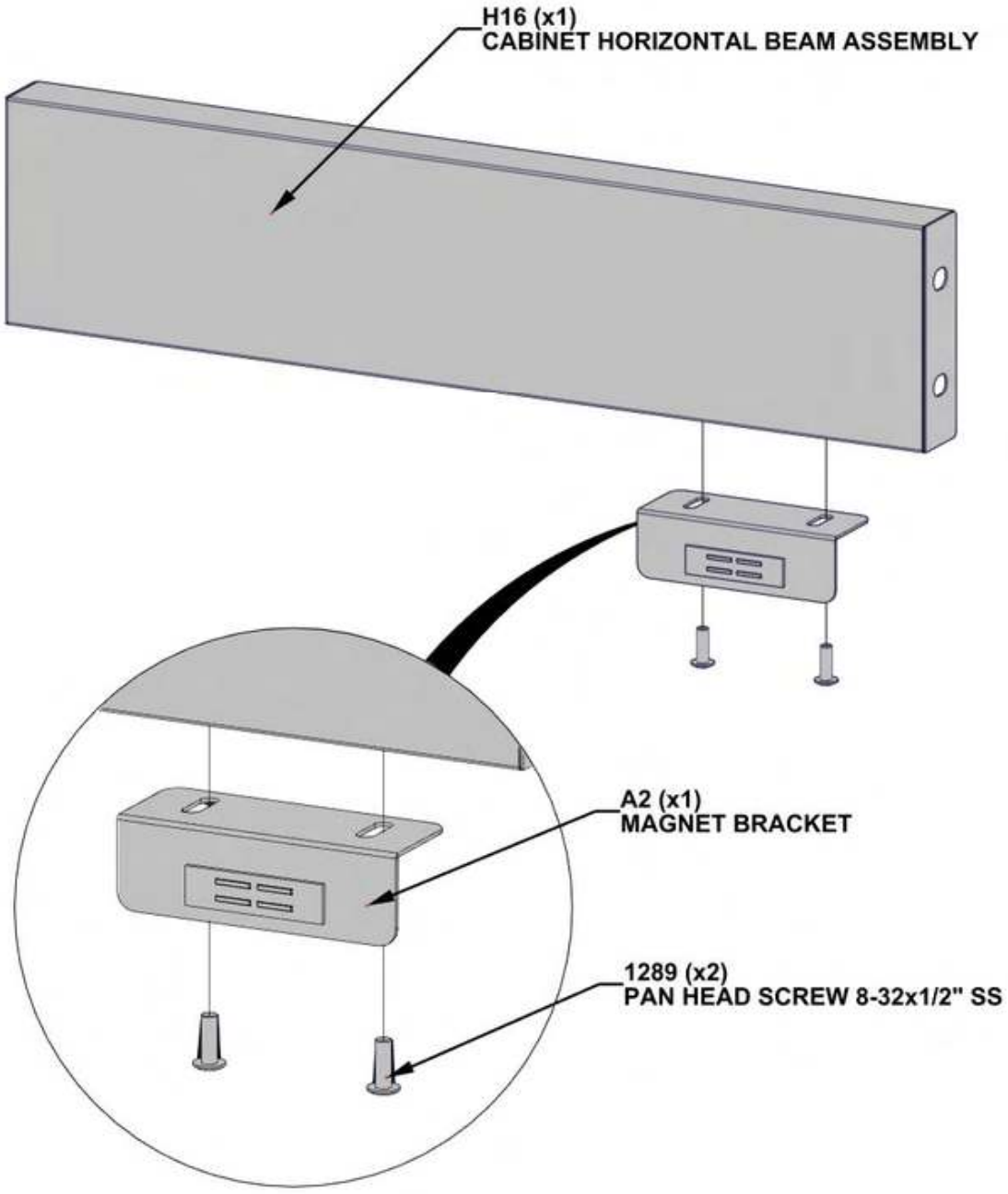

# STEP 9 - SINK CABINET ASSEMBLY

| Qty | PartNo | Description |
|---|---|---|
| 4 | H101202 | TORX PAN HEAD 1/4-20x3/4 ASSY |

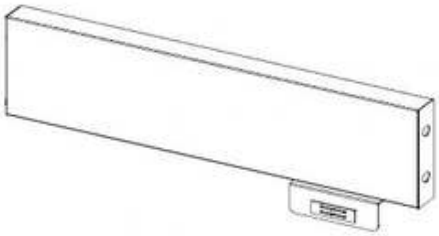

SINK CABINET ASSEMBLY FROM STEP 8

**- HARDWARE ATTACHES ON INSIDE OF CABINET**

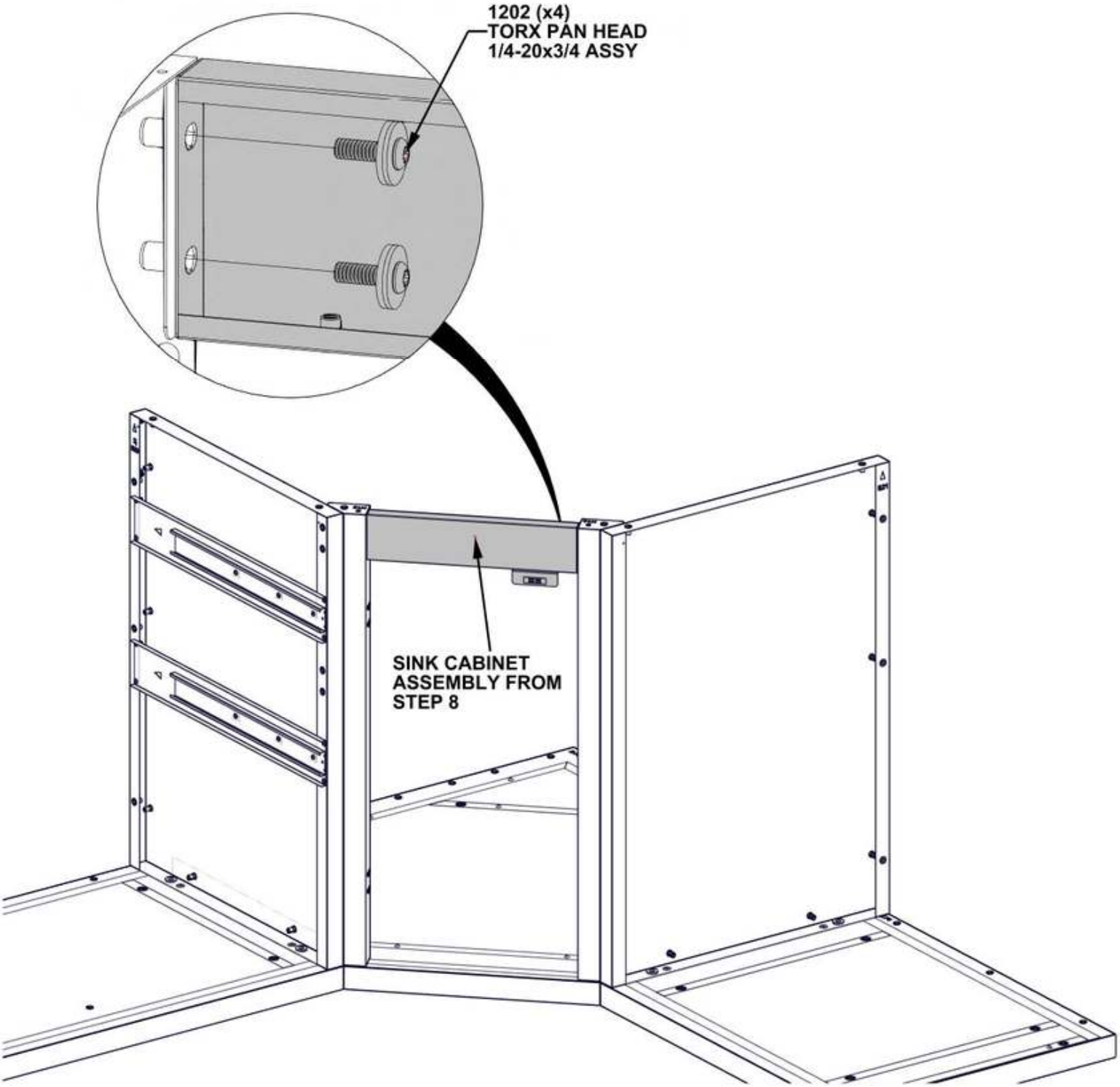

# STEP 10 - SINK CABINET ASSEMBLY

| Qty | PartNo | Description |
|---|---|---|
| 5 | H101202 | TORX PAN HEAD 1/4-20x3/4 ASSY |



**G14 CABINET BACK PANEL ASSEMBLY - A4M04716**
**(x1) 27 5/16"x33 3/8"x1 3/16" (30x847x693)**

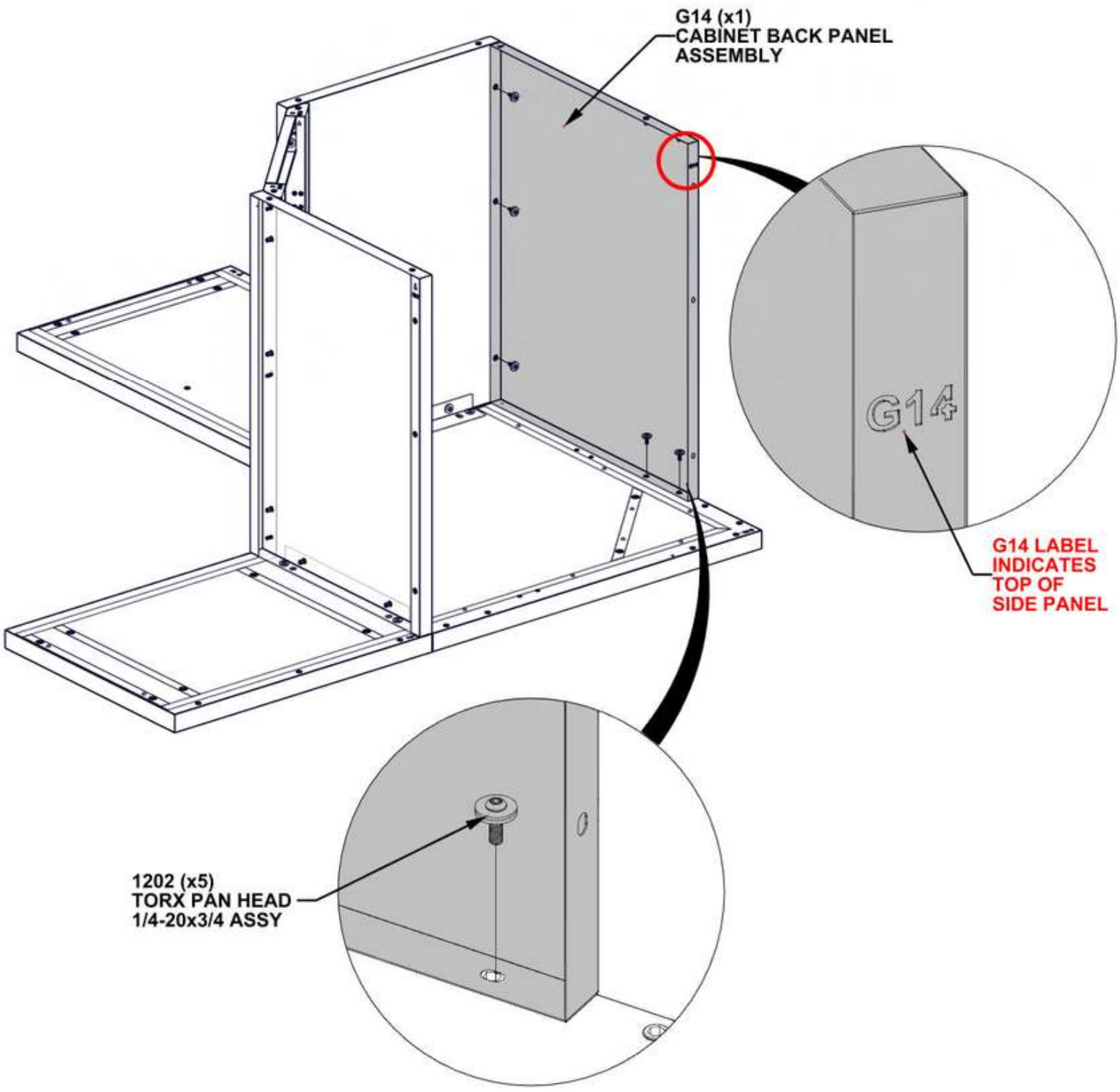

# STEP 11 - SINK CABINET ASSEMBLY



| Qty | PartNo | Description |
|---|---|---|
| 7 | H101202 | TORX PAN HEAD 1/4-20x3/4 ASSY |

**S22 CABINET CORNER PANEL ASSEMBLY - A4M04714**
**(x1) 33 3/8"x8 11/16"x8 11/16" (220x220x848)**

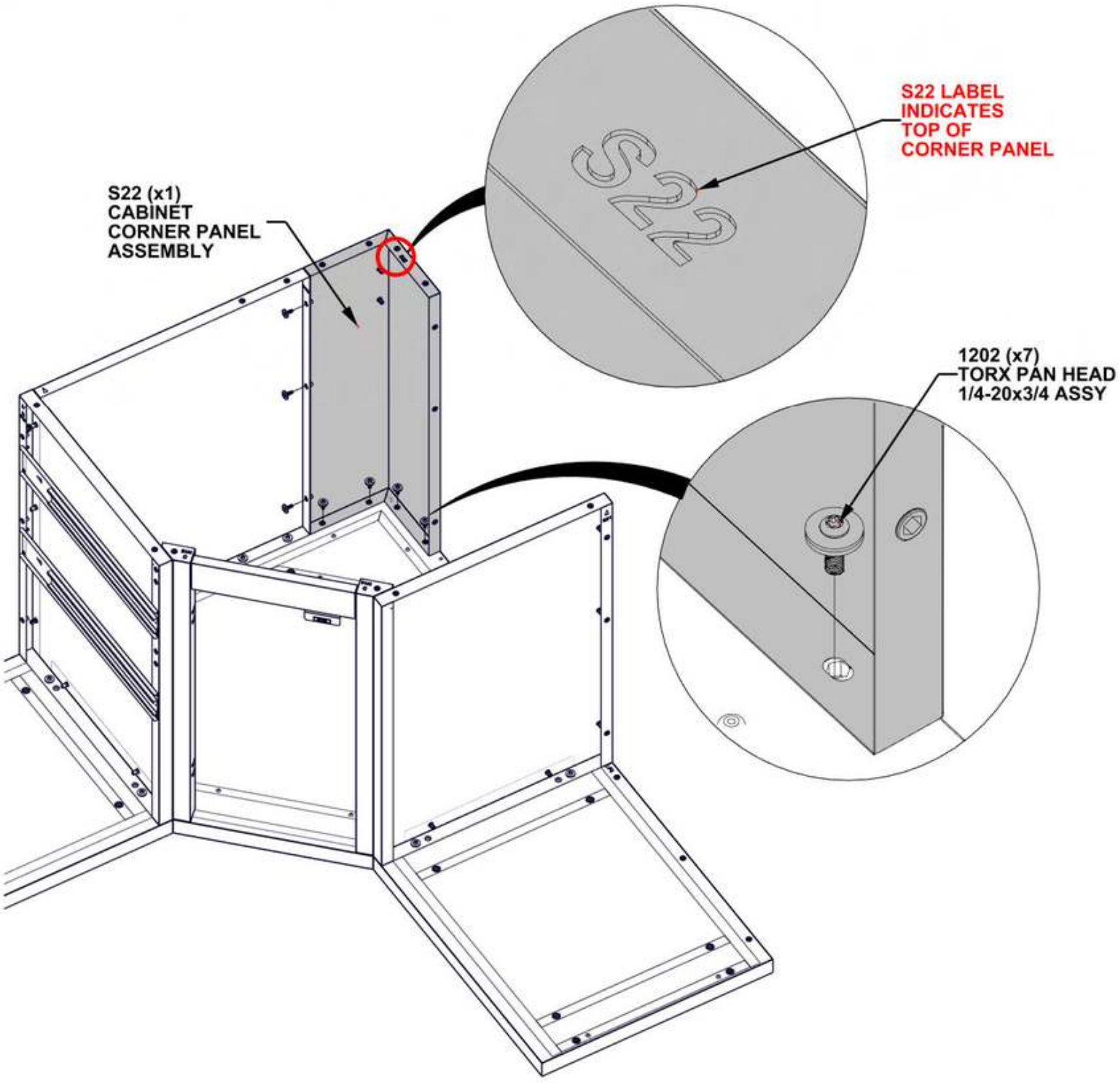

# STEP 12 - SINK CABINET ASSEMBLY



| Qty | PartNo | Description |
|---|---|---|
| 4 | H101289 | PAN HEAD SCREW 8-32x1/2" SS |

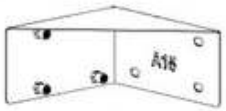


**G13 CABINET BACK PANEL ASSEMBLY - A4M04715**
**(x1) 33 3/8"x8 1/2"x1 3/16" (30x215x848)**

**A15 DOOR STOPPER BRACKET ASSEMBLY - A4M04480**
**(x1) 3 15/16"x3 3/4"1 15/16" (50x95x100)**

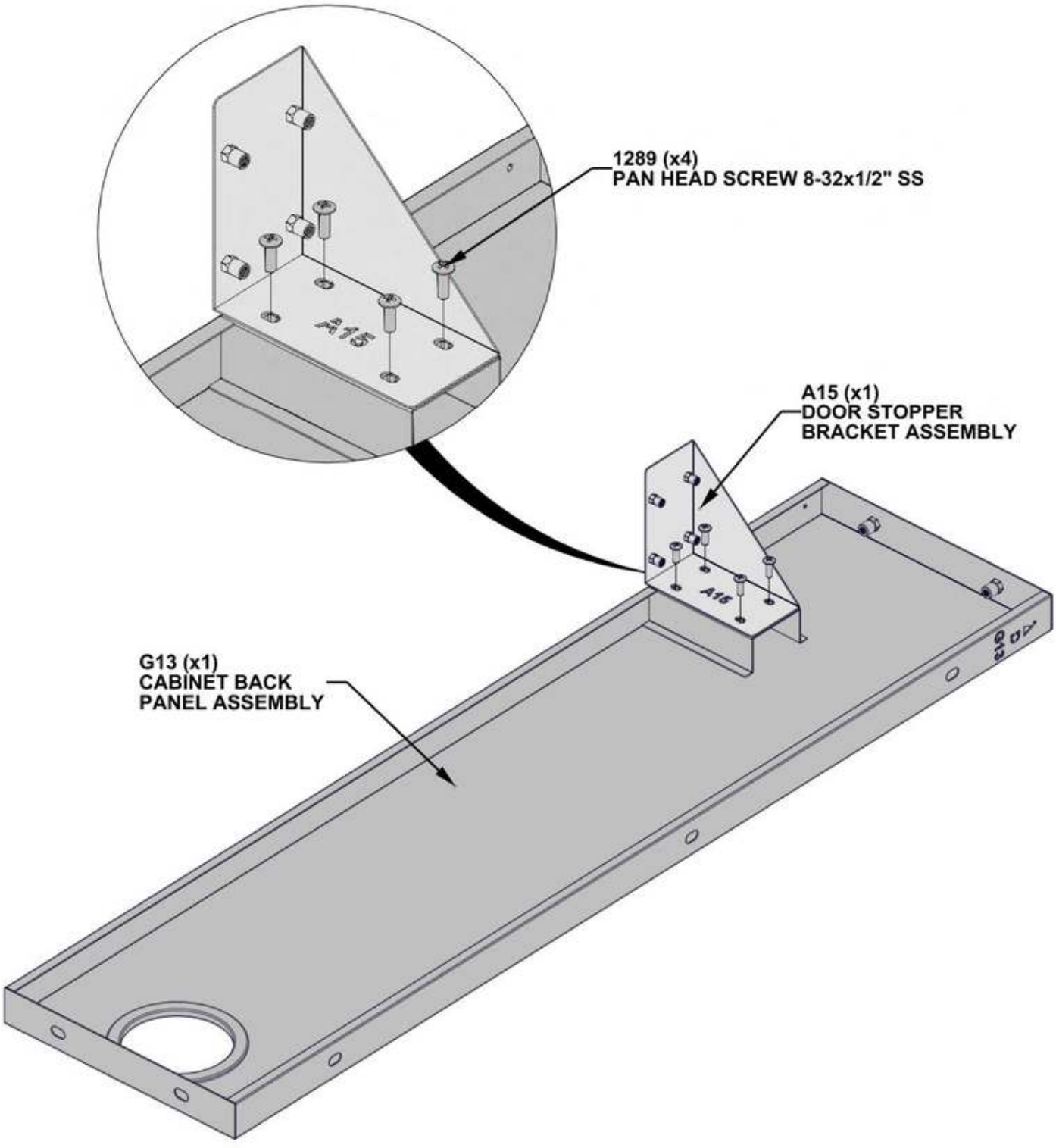

# STEP 13 - SINK CABINET ASSEMBLY

| Qty | PartNo | Description |
|---|---|---|
| 5 | H101202 | TORX PAN HEAD 1/4-20x3/4 ASSY |



SINK CABINET ASSEMBLY FROM STEP 12

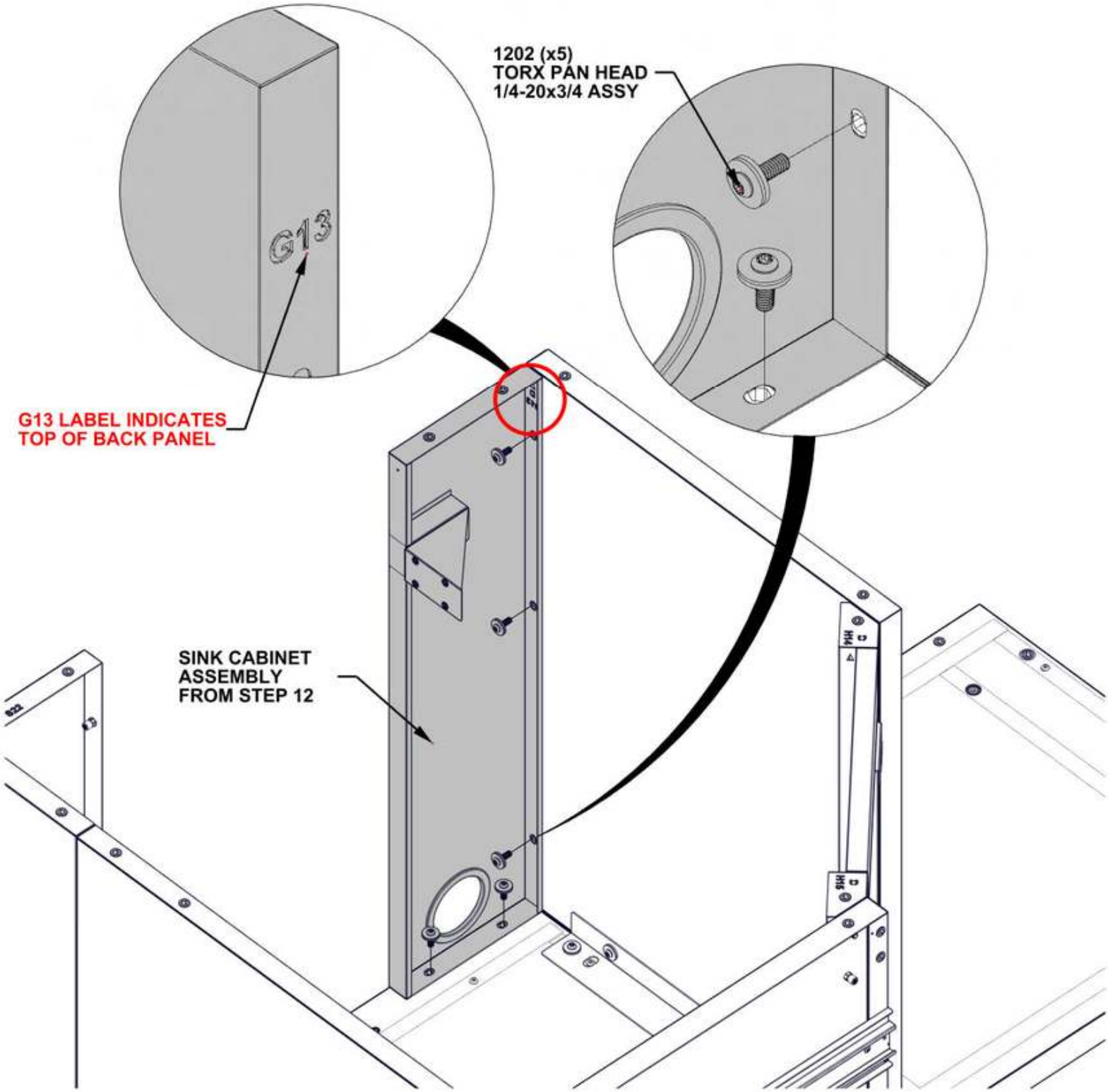

# STEP 14 - SINK CABINET ASSEMBLY

| Qty | PartNo | Description |
|---|---|---|
| 4 | H101289 | PAN HEAD SCREW 8-32x1/2" SS |

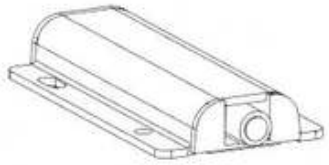

**A12 DOOR STOPPER - A4M04128**
**(x1) 3 11/16"x1 3/4"x1/2" (13x45x94)**

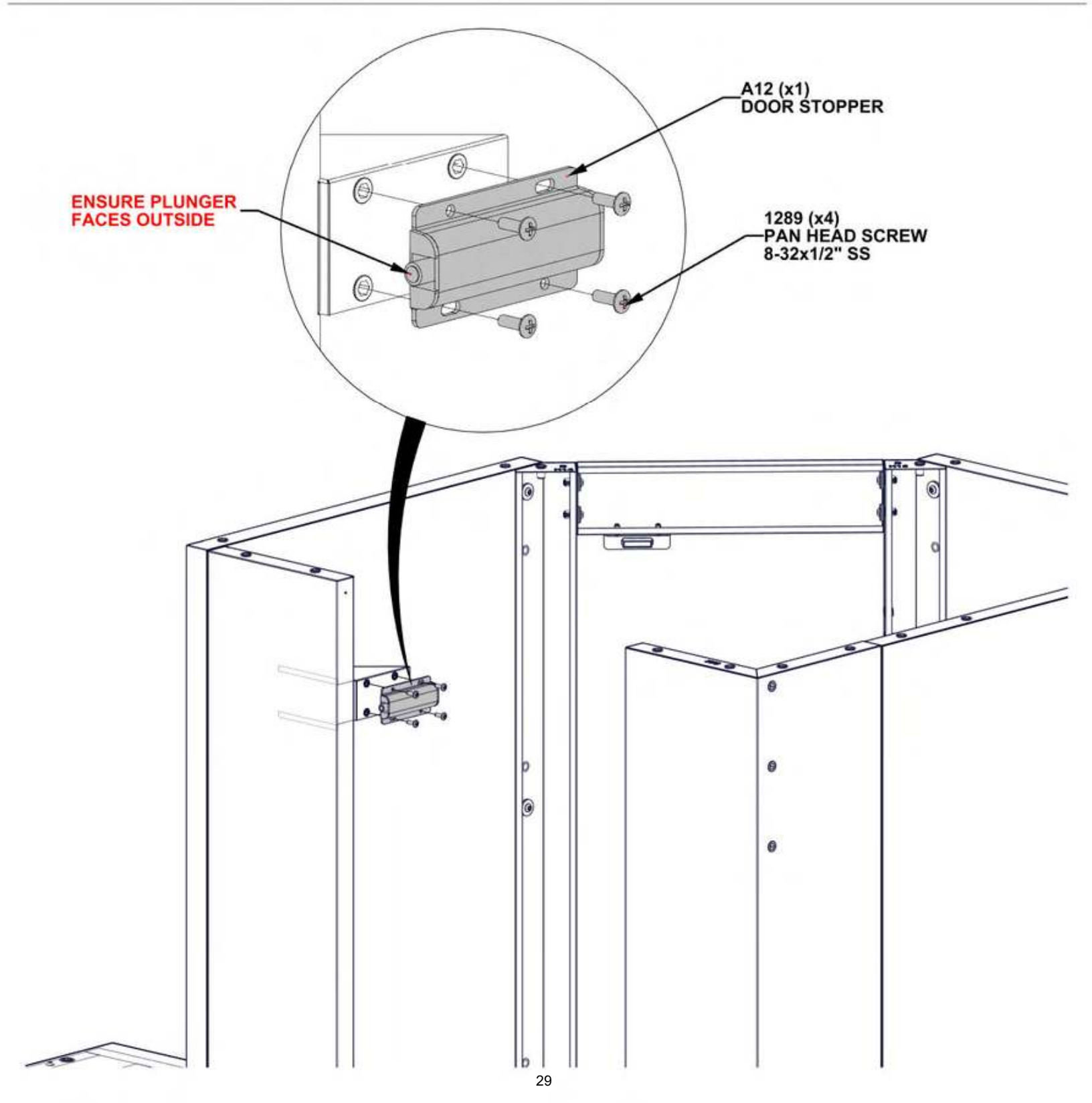

# STEP 15 - SINK CABINET ASSEMBLY

| Qty | PartNo | Description |
|---|---|---|
| 2 | H101289 | PAN HEAD SCREW 8-32x1/2" SS |



**A2 MAGNET BRACKET - A4M03026**
**(x1) 1"x1 1/4"x3 1/8" (25x31x80)**

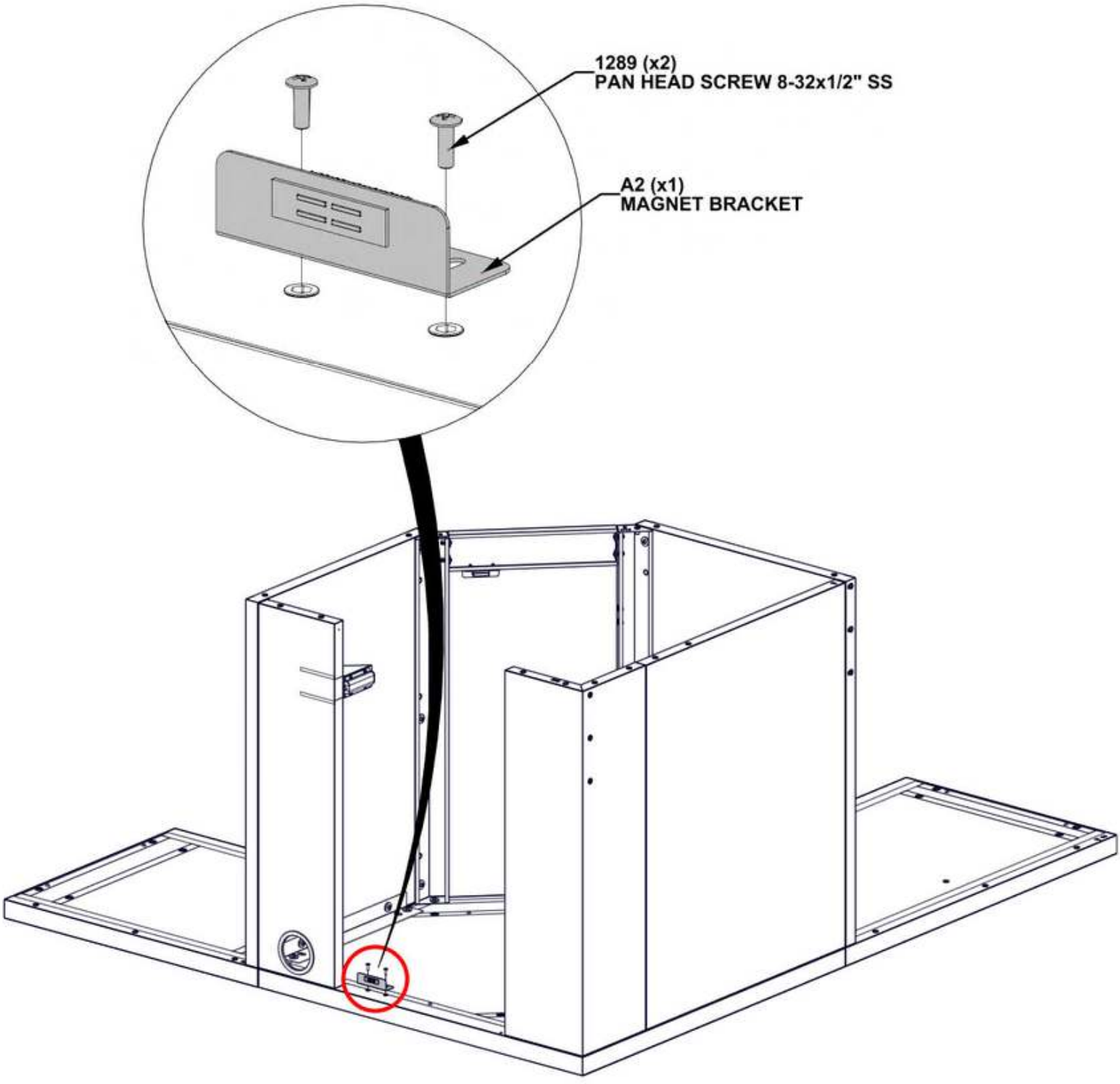

# STEP 16 - SINK CABINET ASSEMBLY

| Qty | PartNo | Description |
|---|---|---|
| 10 | H101103 | TORX SOCKET SCREW 1/4-20 |

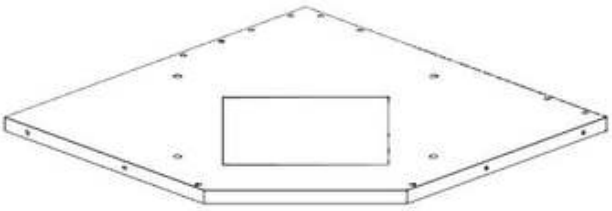

T15 CABINET TABLETOP FRAME - A4M04713
(x1) 36"x914.00x1 1/4" (32x914x914)

- FLUSH BACK AND SIDES OF PANEL ASSEMBLY.
- SQUARE ALL SIDES OF CABINET BEFORE TIGHTENING HARDWARE.

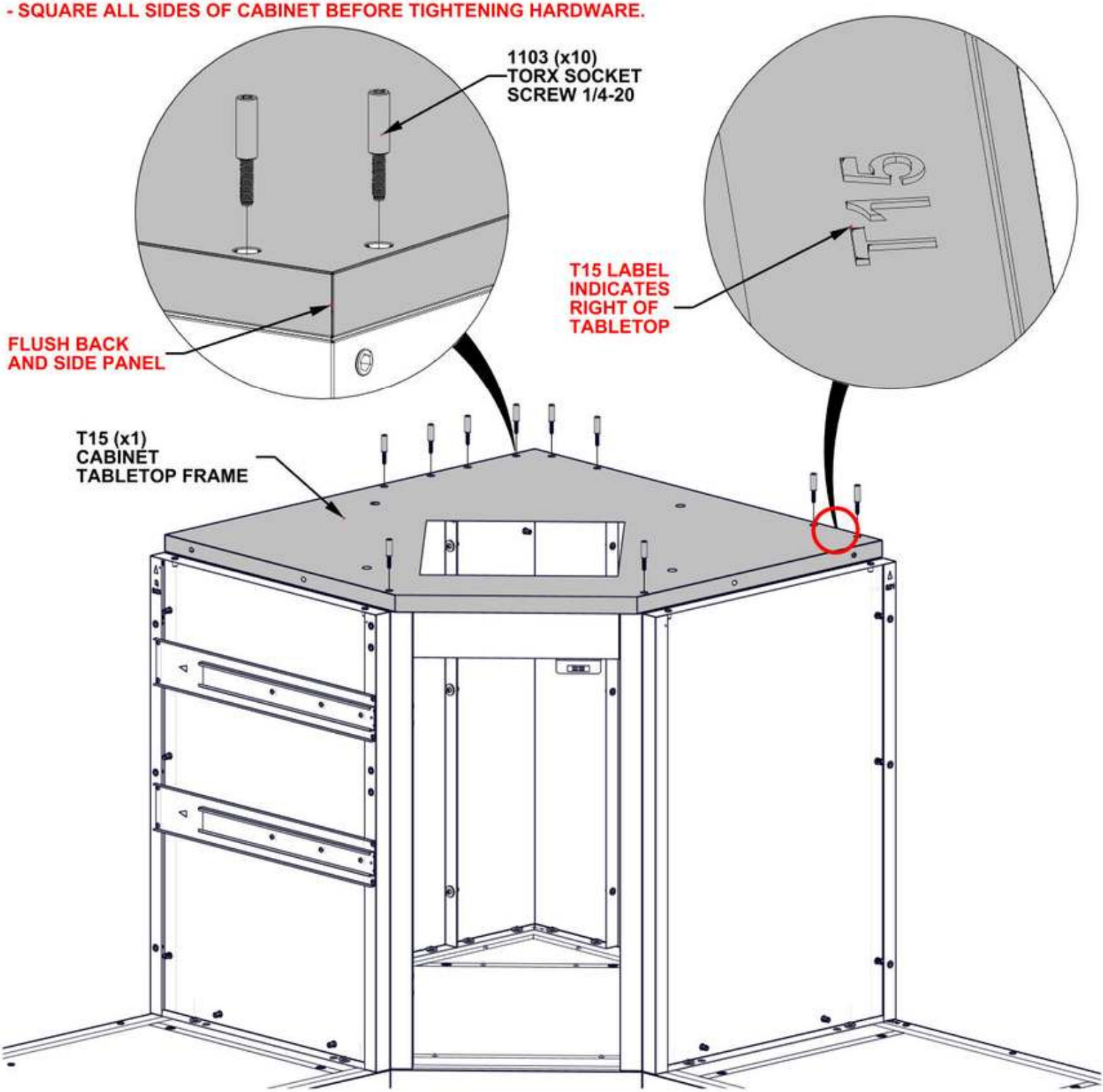

# STEP 17 - RIGHT STORAGE CABINET ASSEMBLY

| Qty | PartNo | Description |
|---|---|---|
| 2 | H101202 | TORX PAN HEAD 1/4-20x3/4 ASSY |



**S25 CABINET SIDE PANEL ASSEMBLY L - A4M04706**
**(x1) 33 3/8"x23 3/8"x1 3/8" (35.00x594.00x848.20)**

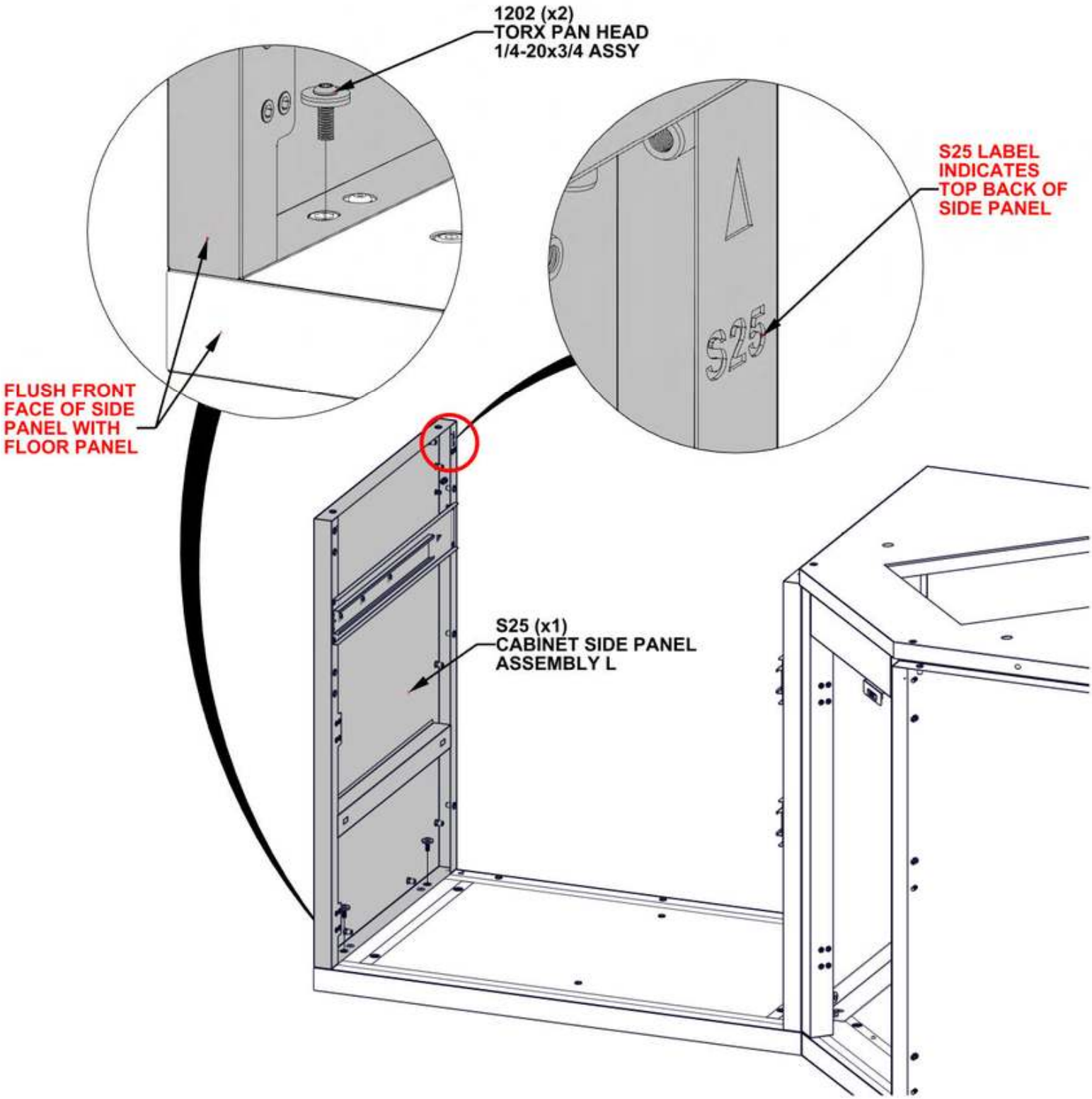

# STEP 18 - RIGHT STORAGE CABINET ASSEMBLY

| Qty | PartNo | Description |
|---|---|---|
| 6 | H101287 | PAN HEAD SCREW 8-32x1" SS |

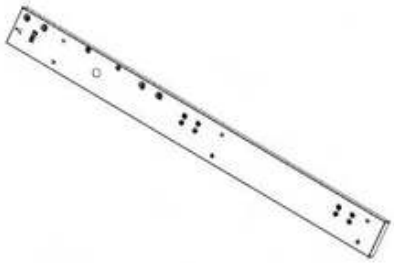

**H13 HINGE CHANNEL ASSEMBLY - A4M03700**
**(x1) 33 3/8"x2 15/16"x11/16" (18x74x847)**

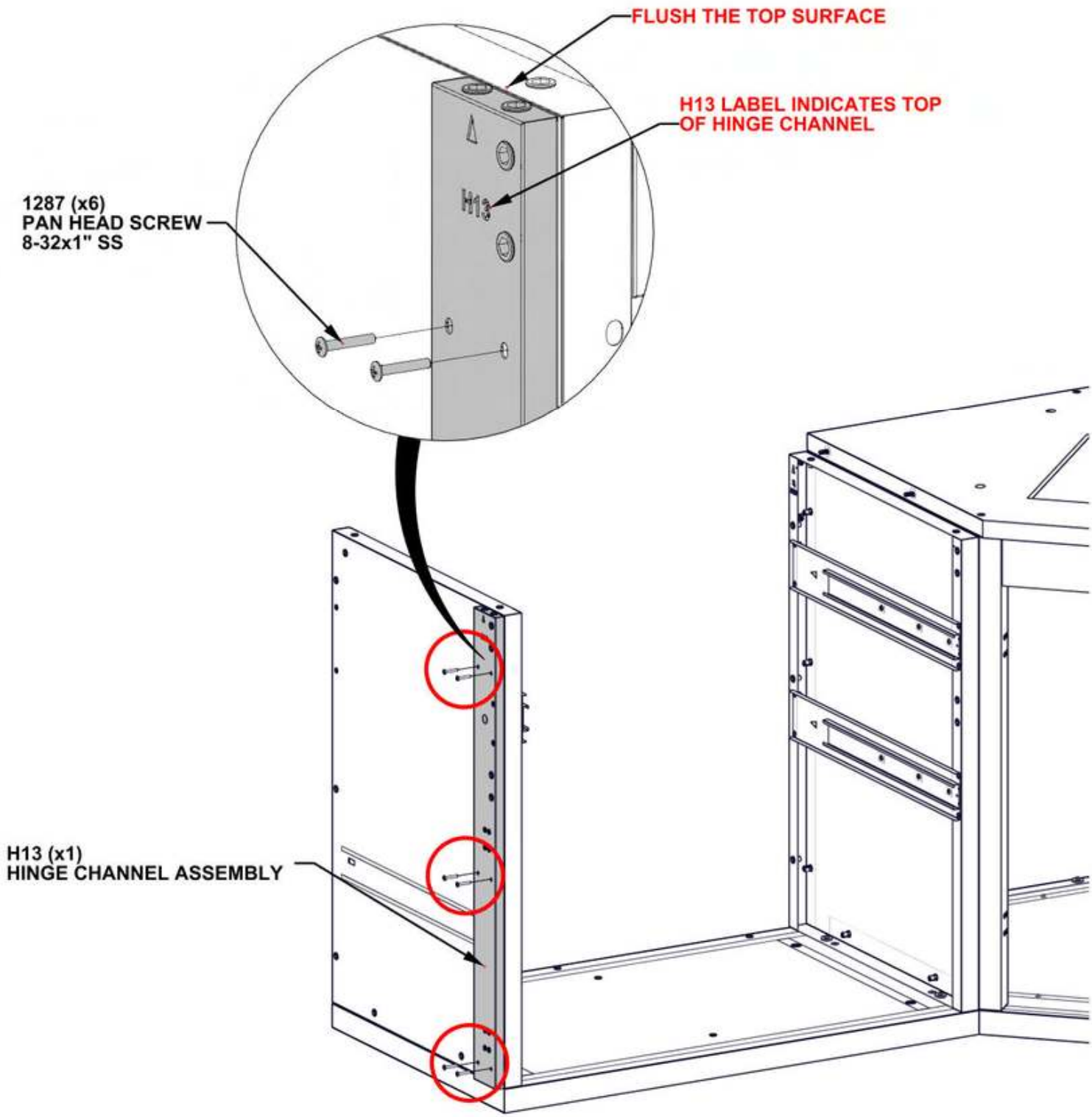

# STEP 19 - RIGHT STORAGE CABINET ASSEMBLY

| Qty | PartNo | Description |
|---|---|---|
| 9 | H101202 | TORX PAN HEAD 1/4-20x3/4 ASSY |

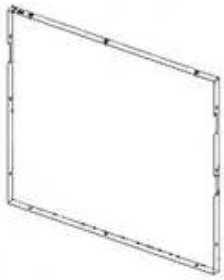

**G15 CABINET BACK PANEL ASSEMBLY - A4M04707**
**(x1) 34 5/16"x33 3/8"x1 3/16" (30x847x1049)**

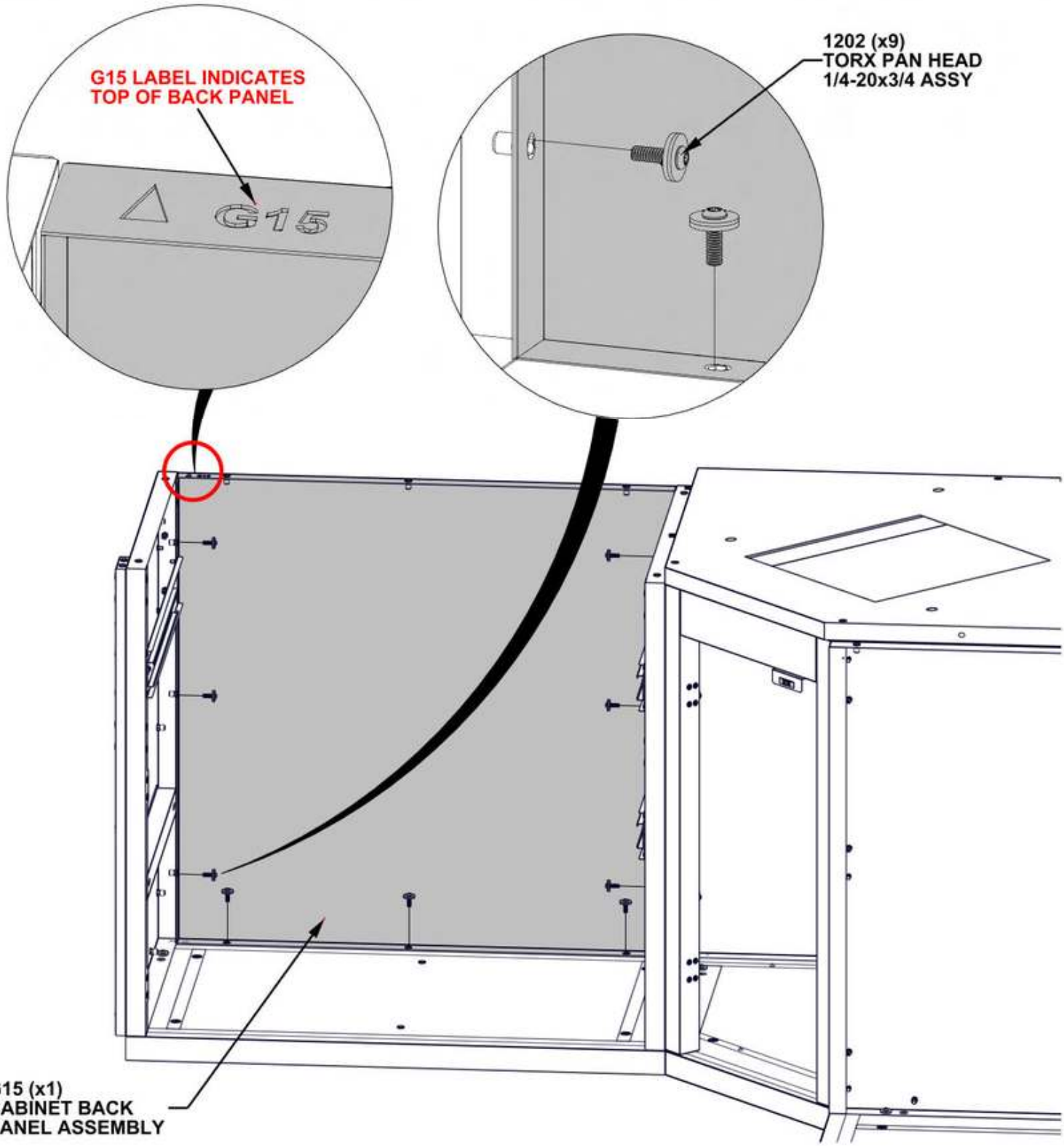

# STEP 20 - RIGHT STORAGE CABINET ASSEMBLY

| Qty | PartNo | Description |
|---|---|---|
| 2 | H101202 | TORX PAN HEAD 1/4-20x3/4 ASSY |

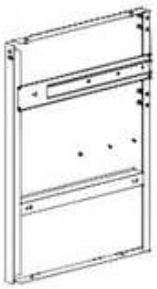

**S24 CABINET SIDE PANEL ASSEMBLY M - A4M04705**
**(x1) 33 3/8"x23 3/8"x2 3/16" (56.2x593x847)**

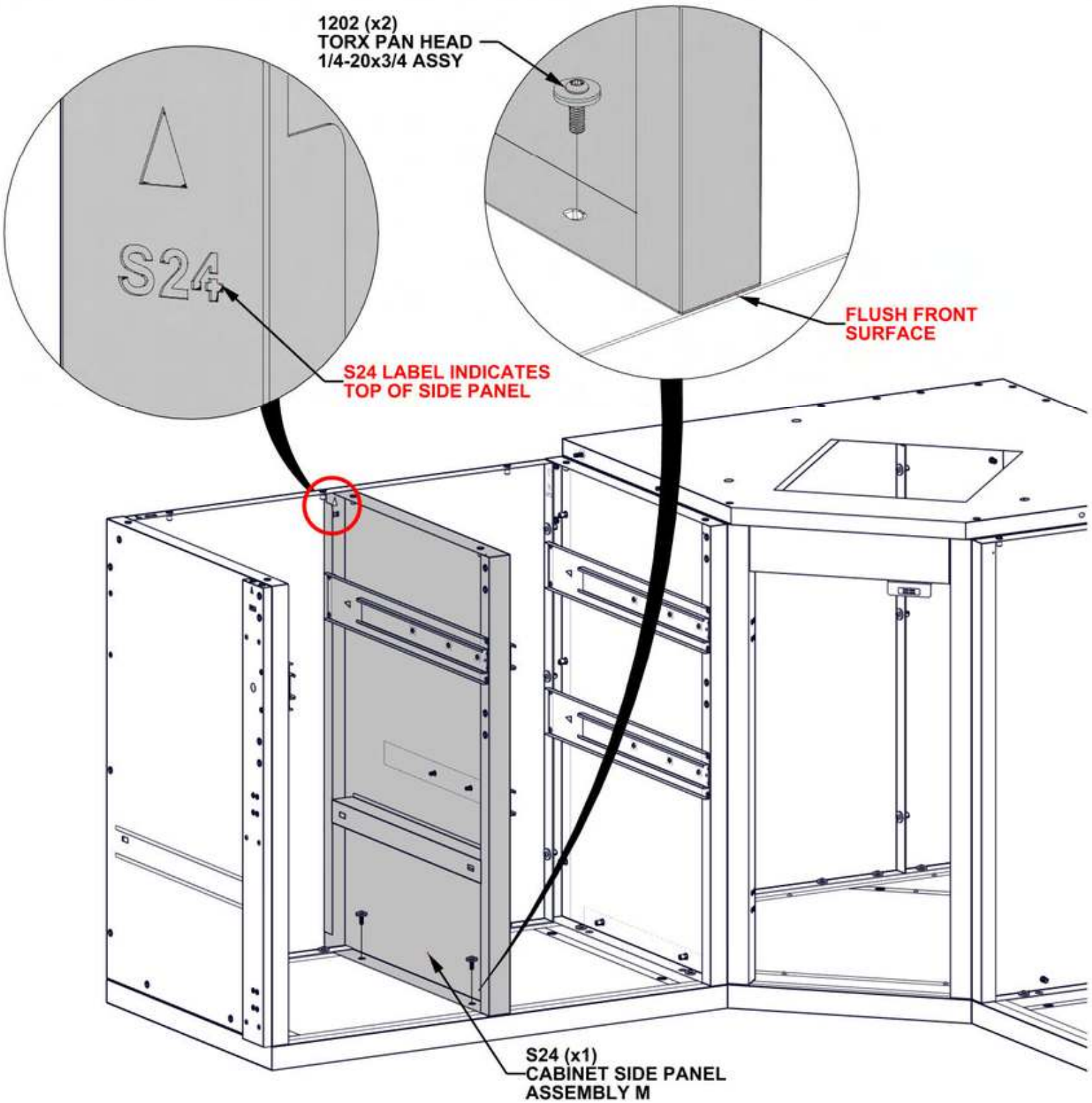

# STEP 21 - RIGHT STORAGE CABINET ASSEMBLY

| Qty | PartNo | Description |
|---|---|---|
| 16 | H101202 | TORX PAN HEAD 1/4-20x3/4 ASSY |

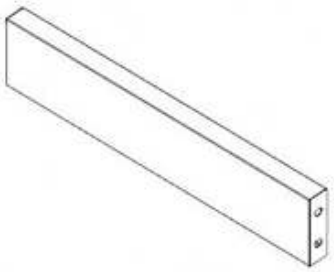

H4 CABINET HORIZONTAL BEAM ASSEMBLY - A4M03575
(x4) 16 1/4"x3 3/8"x1" (25x85x413)

**- HARDWARE ATTACHES ON INSIDE OF CABINET**

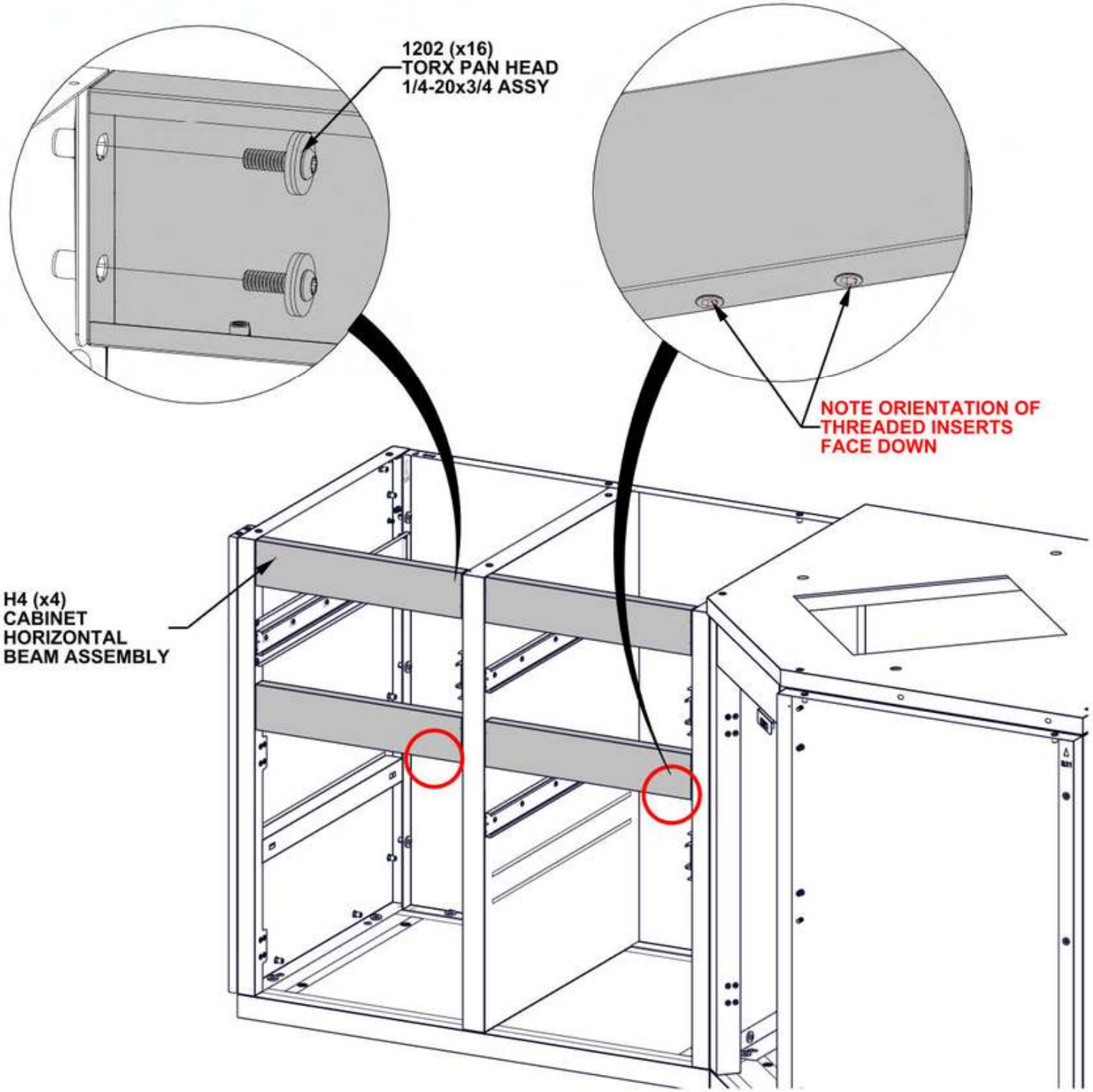

# STEP 22 - RIGHT STORAGE CABINET ASSEMBLY

| Qty | PartNo | Description |
|---|---|---|
| 2 | H101289 | PAN HEAD SCREW 8-32x1/2" SS |



**A2 MAGNET BRACKET - A4M03026**
**(x1) 1"x1 1/4"x3 1/8" (25x31x80)**

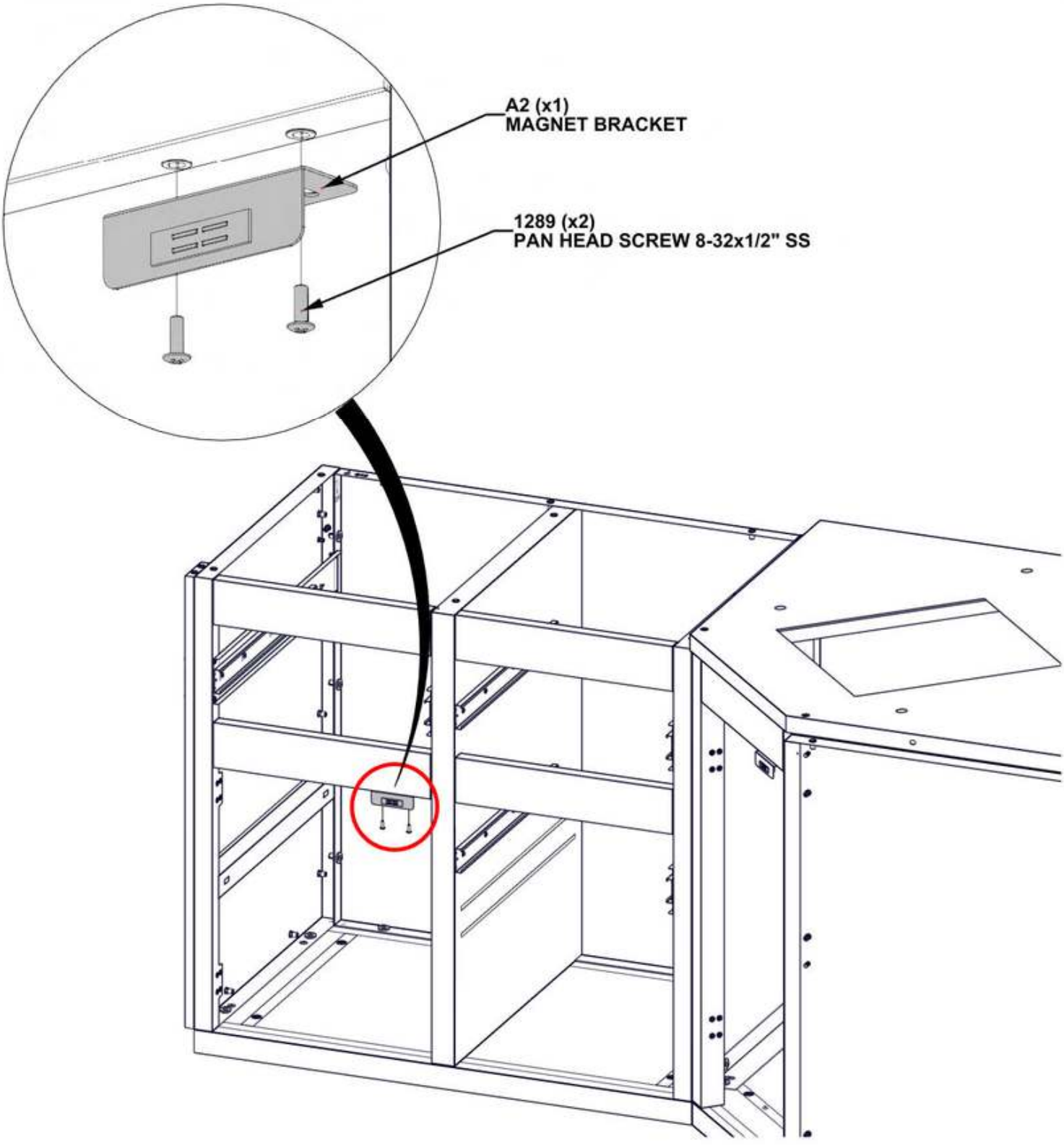

# STEP 23 - RIGHT STORAGE CABINET ASSEMBLY

| Qty | PartNo | Description |
|---|---|---|
| 9 | H101103 | TORX SOCKET SCREW 1/4-20 |

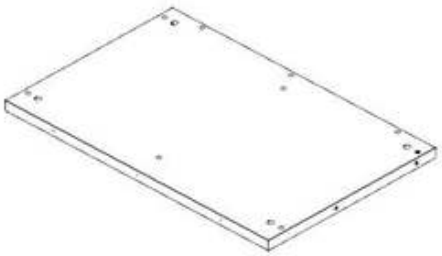

T16 (x1) CABINET TABLETOP ASSEMBLY - A4M04708
37 3/16"x24 1/8"x1 1/4" (32x612x944)

- FLUSH BACK AND SIDES OF PANEL ASSEMBLY.
- SQUARE ALL SIDES OF CABINET BEFORE TIGHTENING HARDWARE.

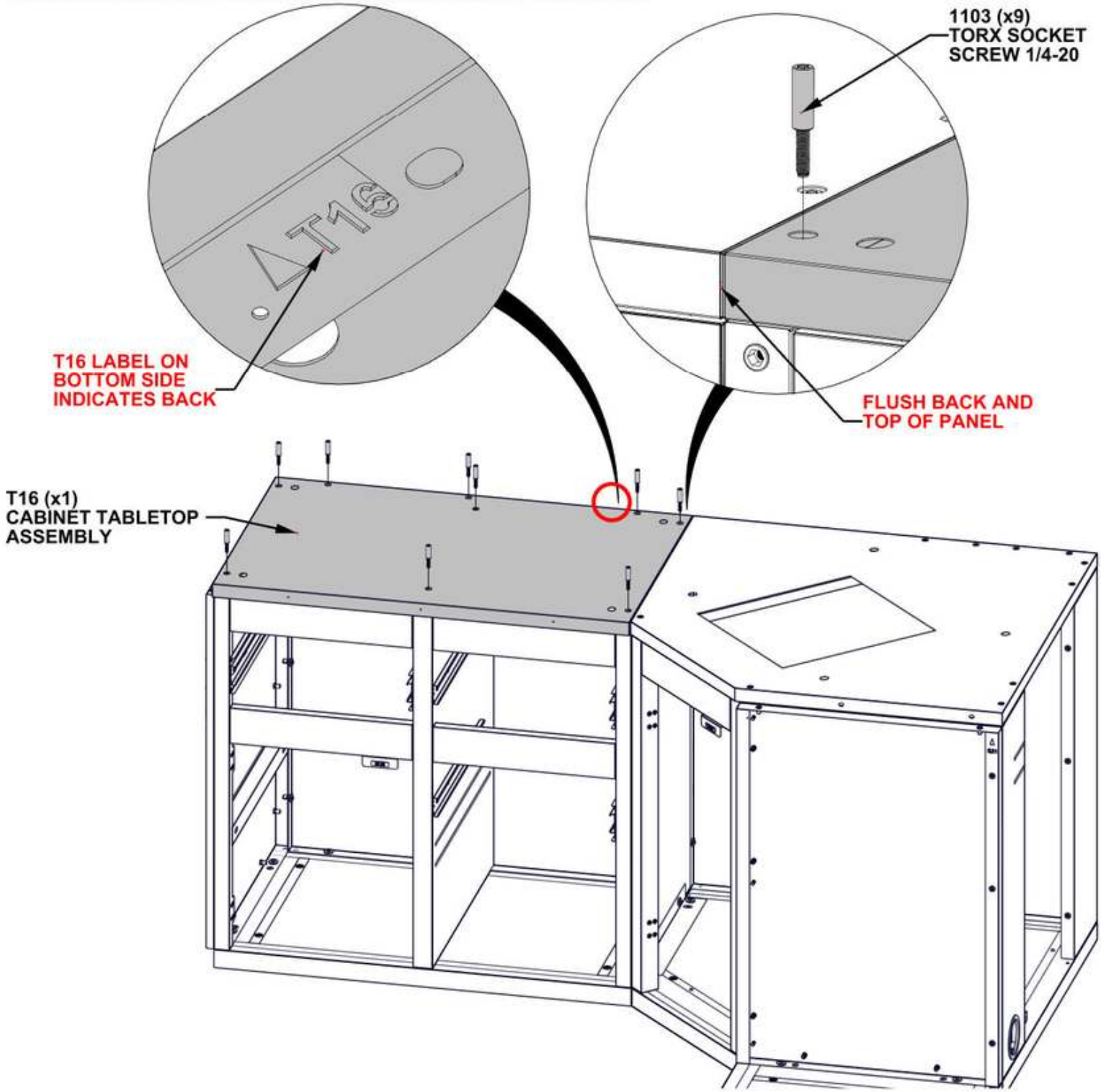

# STEP 24 - LEFT STORAGE CABINET ASSEMBLY

| Qty | PartNo | Description |
|---|---|---|
| 4 | H101202 | TORX PAN HEAD 1/4-20x3/4 ASSY |



F7 CABINET FLOOR ASSEMBLY - A4M03687
(x1) 40 3/16"x23 3/8"x2 5/8" (66x594x1020)

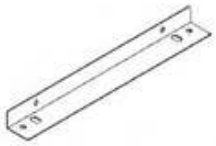

A6 ANGLED BRACKET - A4M03053
(x1) 1 3/8"x1 15/16"x17 1/8" (35x50x435)

- POSITION FLOOR PANEL AS SHOWN BELOW.
- EACH FLOOR PANEL HAS FACTORY INSTALLED ADJUSTABLE FEET. USE PROVIDED HEX DRIVER TO ADJUST EACH FOOT UNTIL PANEL IS LEVEL.

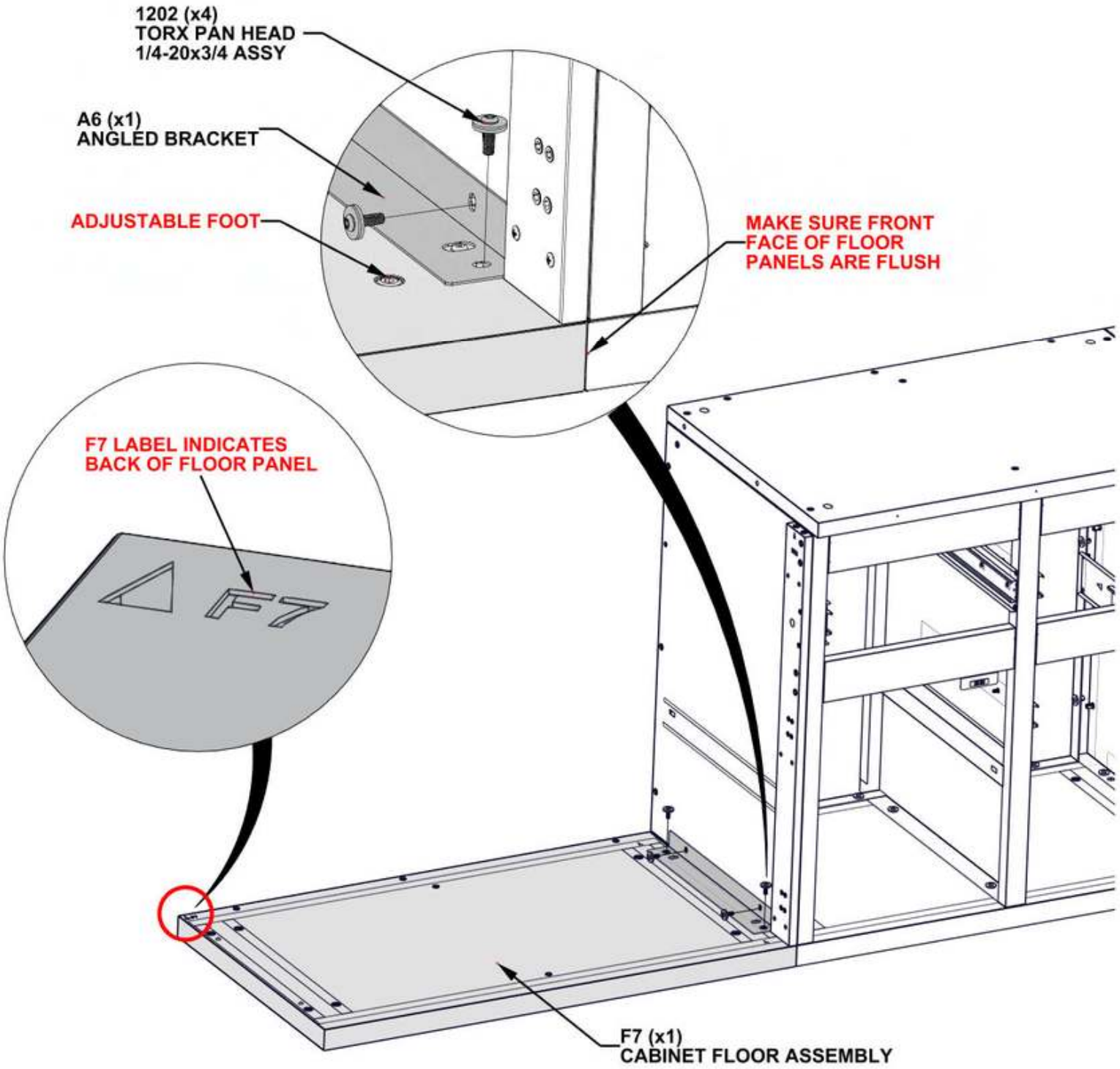

# STEP 25 - LEFT STORAGE CABINET ASSEMBLY

| Qty | PartNo | Description |
|---|---|---|
| 2 | H101202 | TORX PAN HEAD 1/4-20x3/4 ASSY |



**S26 CABINET SIDE PANEL ASSEMBLY L - A4M04709**
**(x1) 33 3/8"x23 3/8"x1 15/16" (50.00x594.00x848.20)**

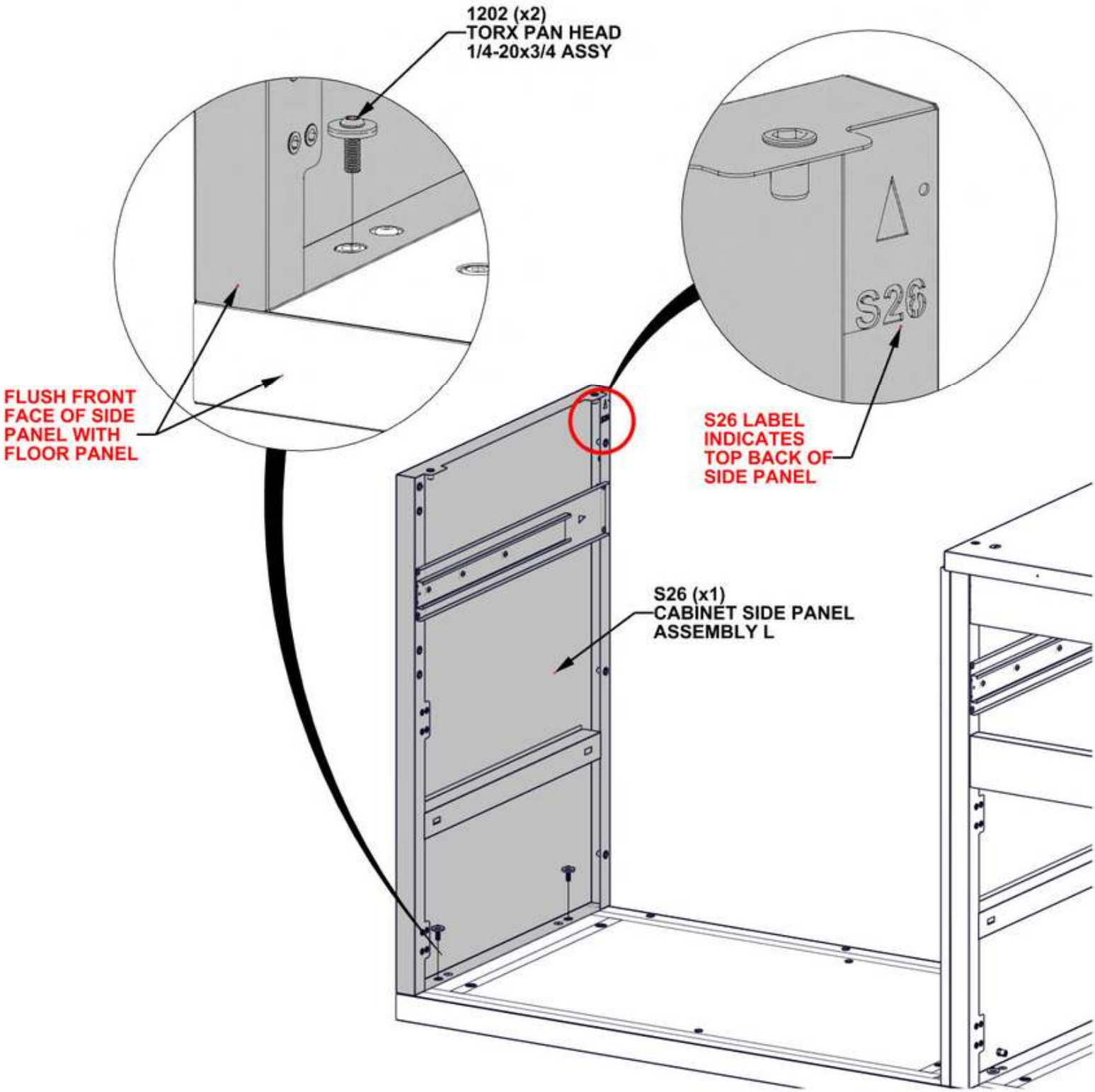

# STEP 26 - LEFT STORAGE CABINET ASSEMBLY

| Qty | PartNo | Description |
|---|---|---|
| 9 | H101202 | TORX PAN HEAD 1/4-20x3/4 ASSY |



**G12 CABINET BACK PANEL ASSEMBLY - A4M03691**
**(x1) 38 3/4"x33 3/8"x1 3/16" (30x847x984)**

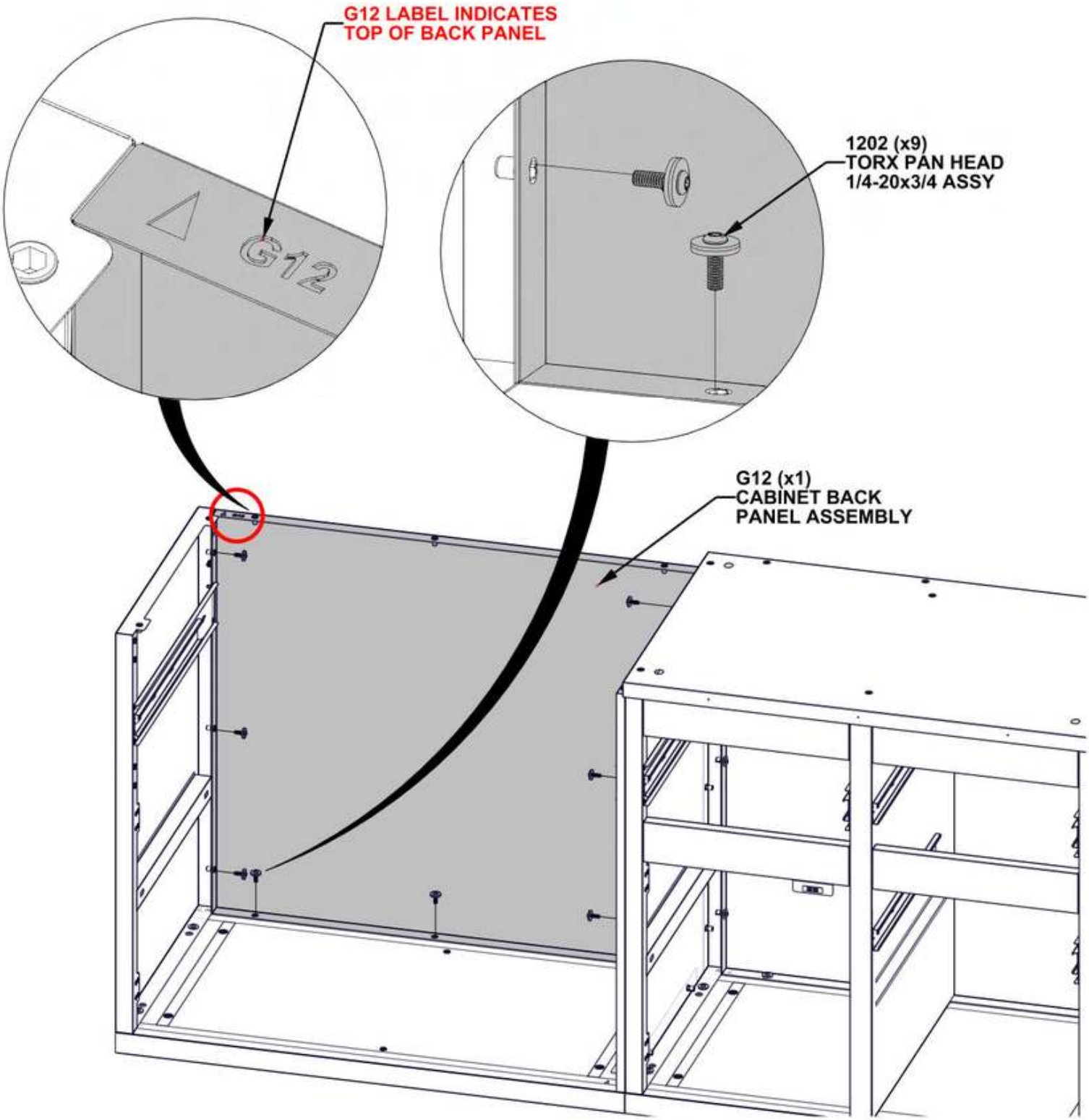

# STEP 27A - LEFT STORAGE CABINET ASSEMBLY

| Qty | PartNo | Description |
|---|---|---|
| 2 | H101289 | PAN HEAD SCREW 8-32x1/2" SS |



**H11 DRAWER FIXING PIECE ASSEMBLY - A4M03692**
**(x1) 5 3/8"x1 1/16"x11/16" (17x27x137)**

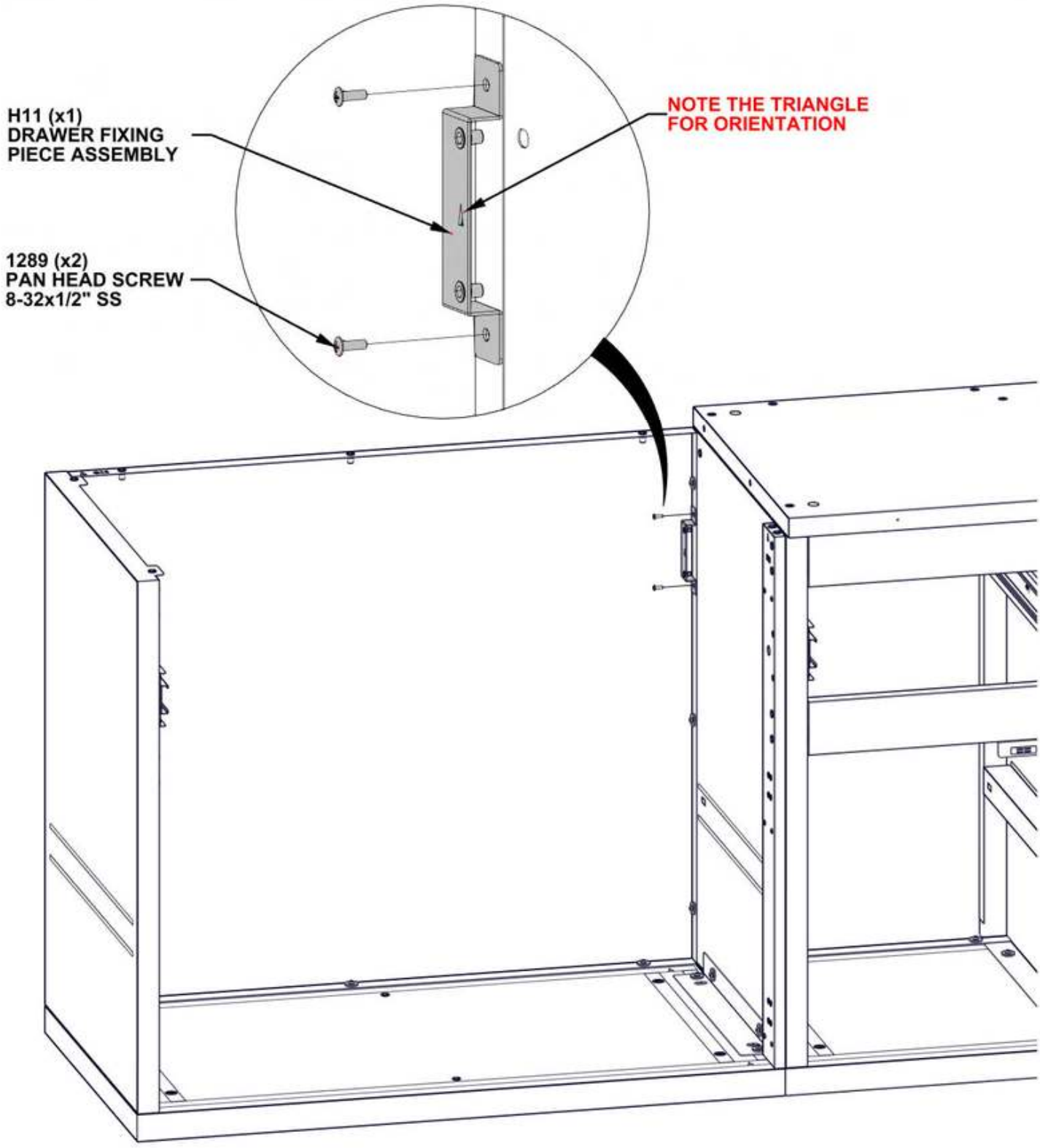

# STEP 27B - LEFT STORAGE CABINET ASSEMBLY

| Qty | PartNo | Description |
|---|---|---|
| 4 | H101289 | PAN HEAD SCREW 8-32x1/2" SS |

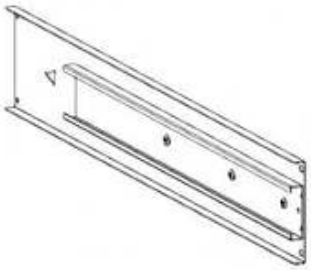

**A10 SLIDE BRACKET ASSEMBLY - A4M03083**
**(x1) 15/16"x3 3/8"x22 5/8" (23x85x575)**

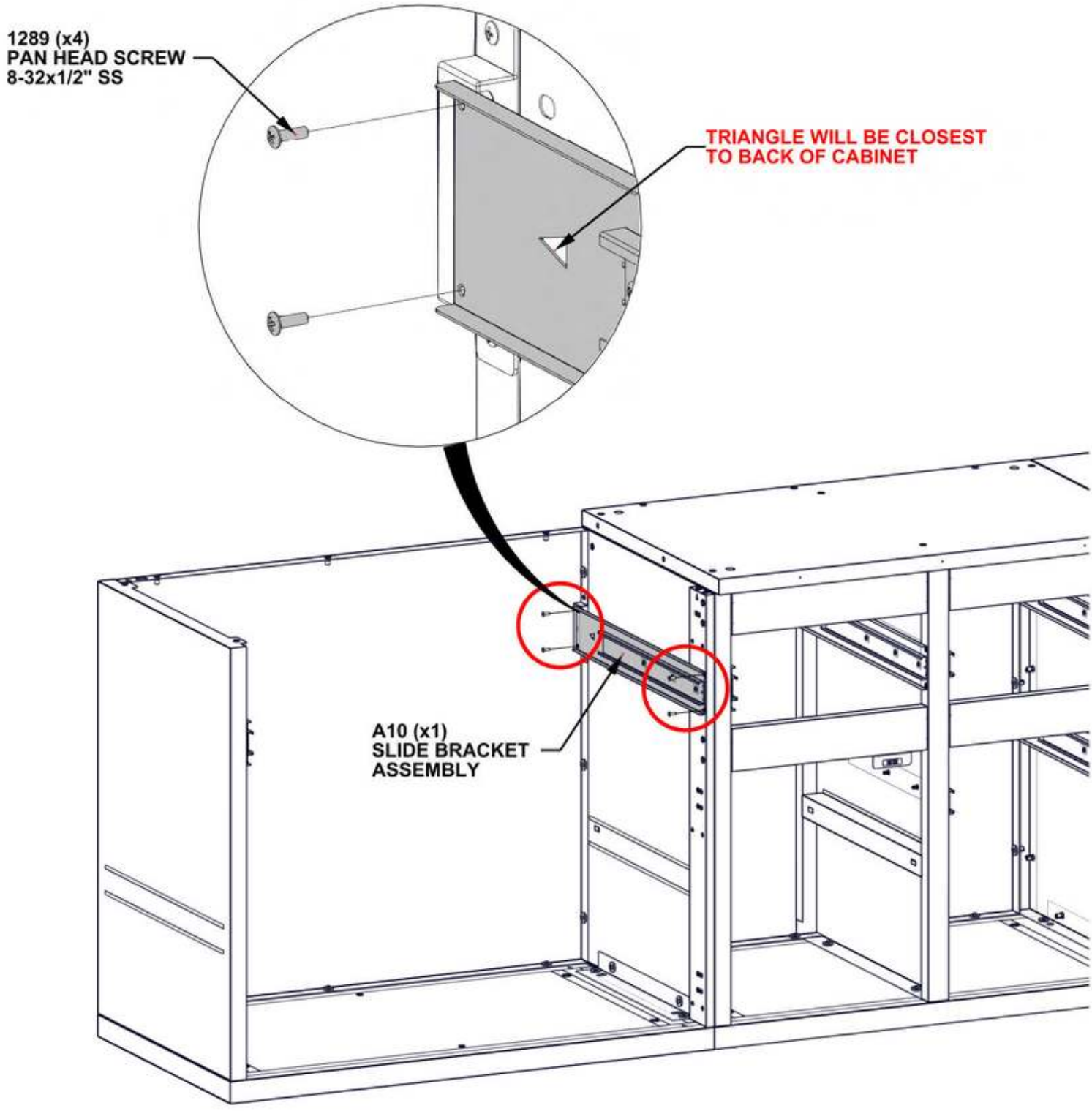

# STEP 28 - LEFT STORAGE CABINET ASSEMBLY

| Qty | PartNo | Description |
|---|---|---|
| 2 | H101202 | TORX PAN HEAD 1/4-20x3/4 ASSY |



**S17 (x1)** CABINET SIDE PANEL ASSEMBLY M - A4M05647
33 3/8"x23 3/8"x1 3/8" (35.00x593.20x847.20)

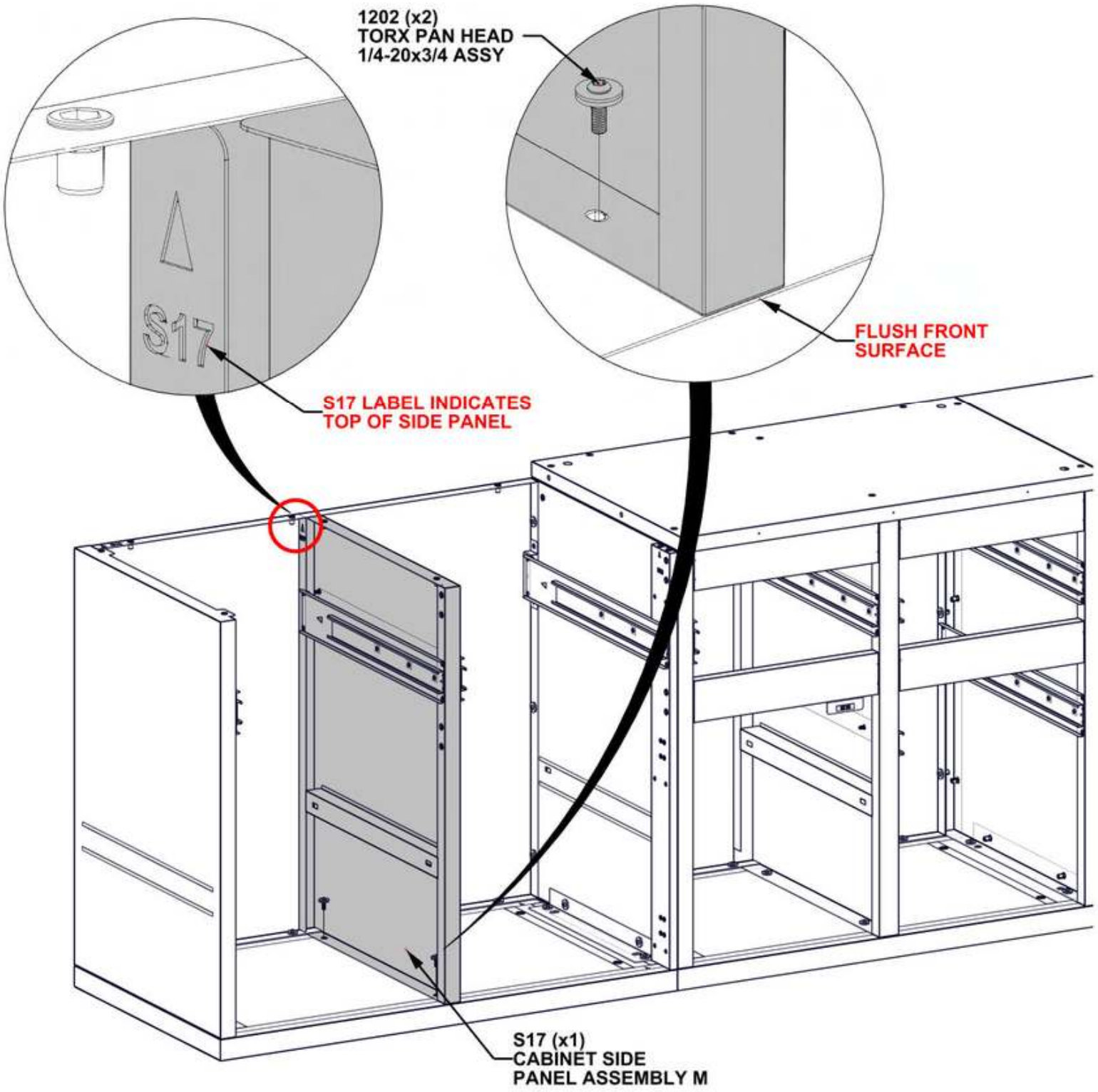

# STEP 29 - LEFT STORAGE CABINET ASSEMBLY

| Qty | PartNo | Description |
|---|---|---|
| 16 | H101202 | TORX PAN HEAD 1/4-20x3/4 ASSY |

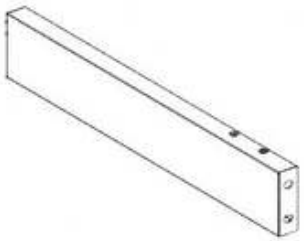

**H12 HORIZONTAL BEAM ASSEMBLY - A4M03695**
**(x4) 18 1/4"x2 15/16"x1" (25x75x464)**

**- HARDWARE ATTACHES ON INSIDE OF CABINET**

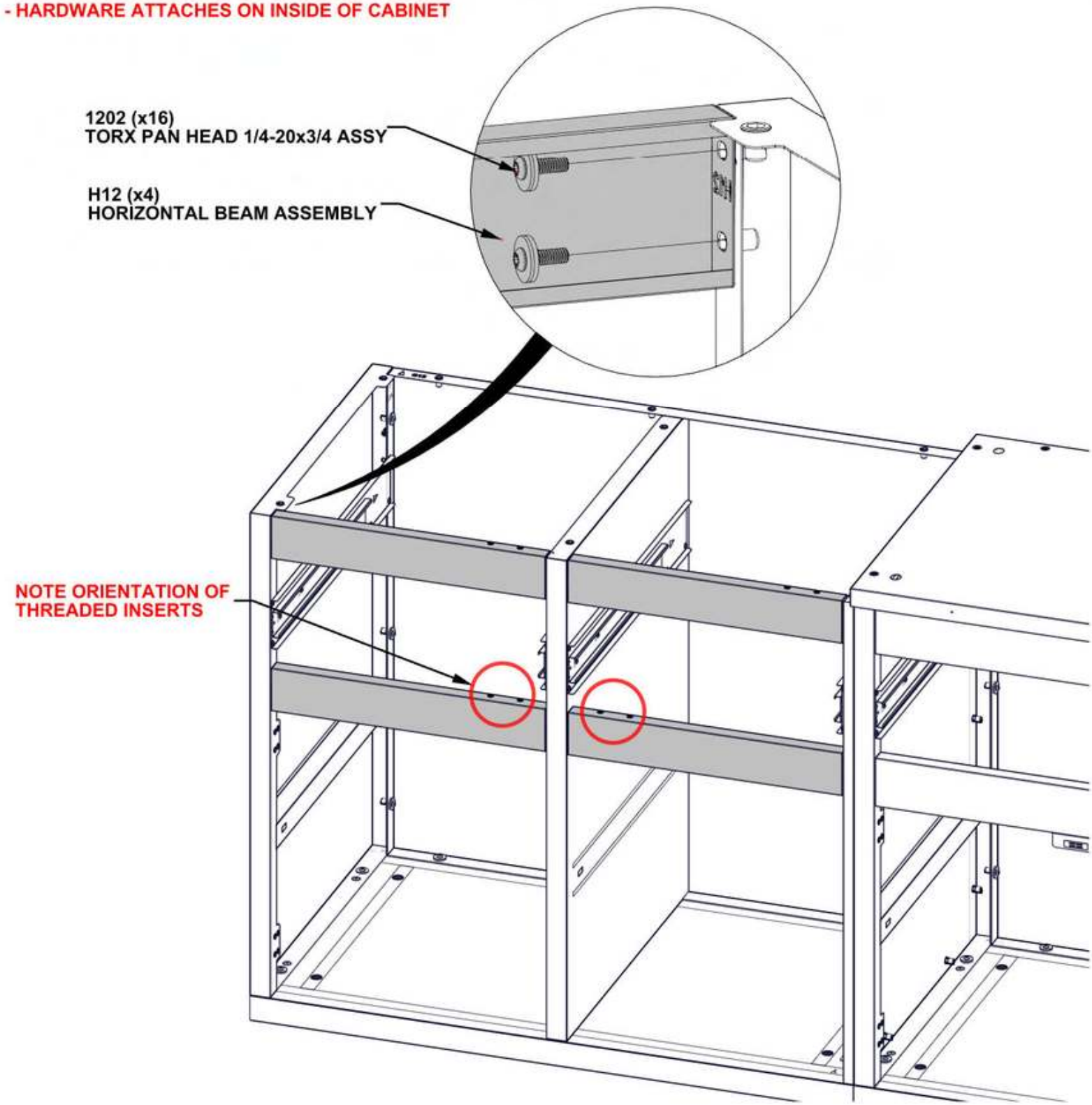

# STEP 30 - LEFT STORAGE CABINET ASSEMBLY

| Qty | PartNo | Description |
|---|---|---|
| 4 | H101289 | PAN HEAD SCREW 8-32x1/2" SS |



**A2 MAGNET BRACKET - A4M03026**
**(x2) 1"x1 1/4"x3 1/8" (25x31x80)**

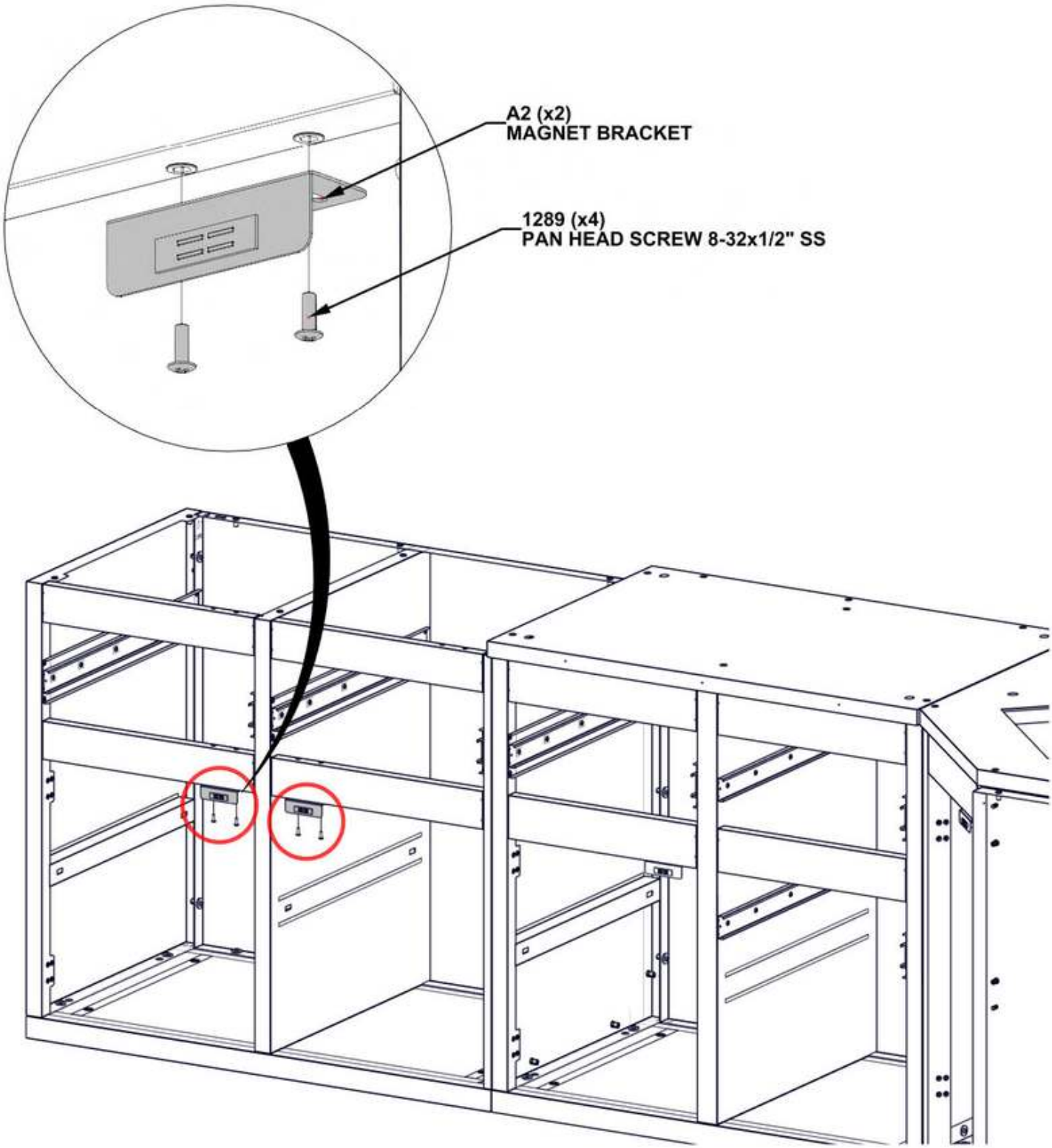

# STEP 31 - LEFT STORAGE CABINET ASSEMBLY

| Qty | PartNo | Description |
|---|---|---|
| 9 | H101103 | TORX SOCKET SCREW 1/4-20 |

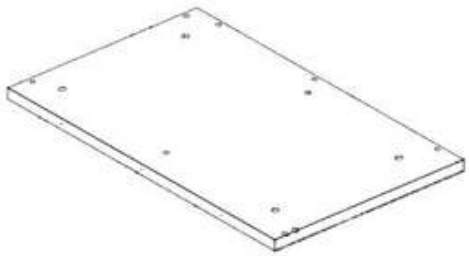

T12 CABINET TABLETOP ASSEMBLY - A4M03693
(x1) 39 7/16"x24 1/8"x1 1/4"1 1/4" (32x612x1001)

- FLUSH BACK AND SIDES OF PANEL ASSEMBLY.
- SQUARE ALL SIDES OF CABINET BEFORE TIGHTENING HARDWARE.

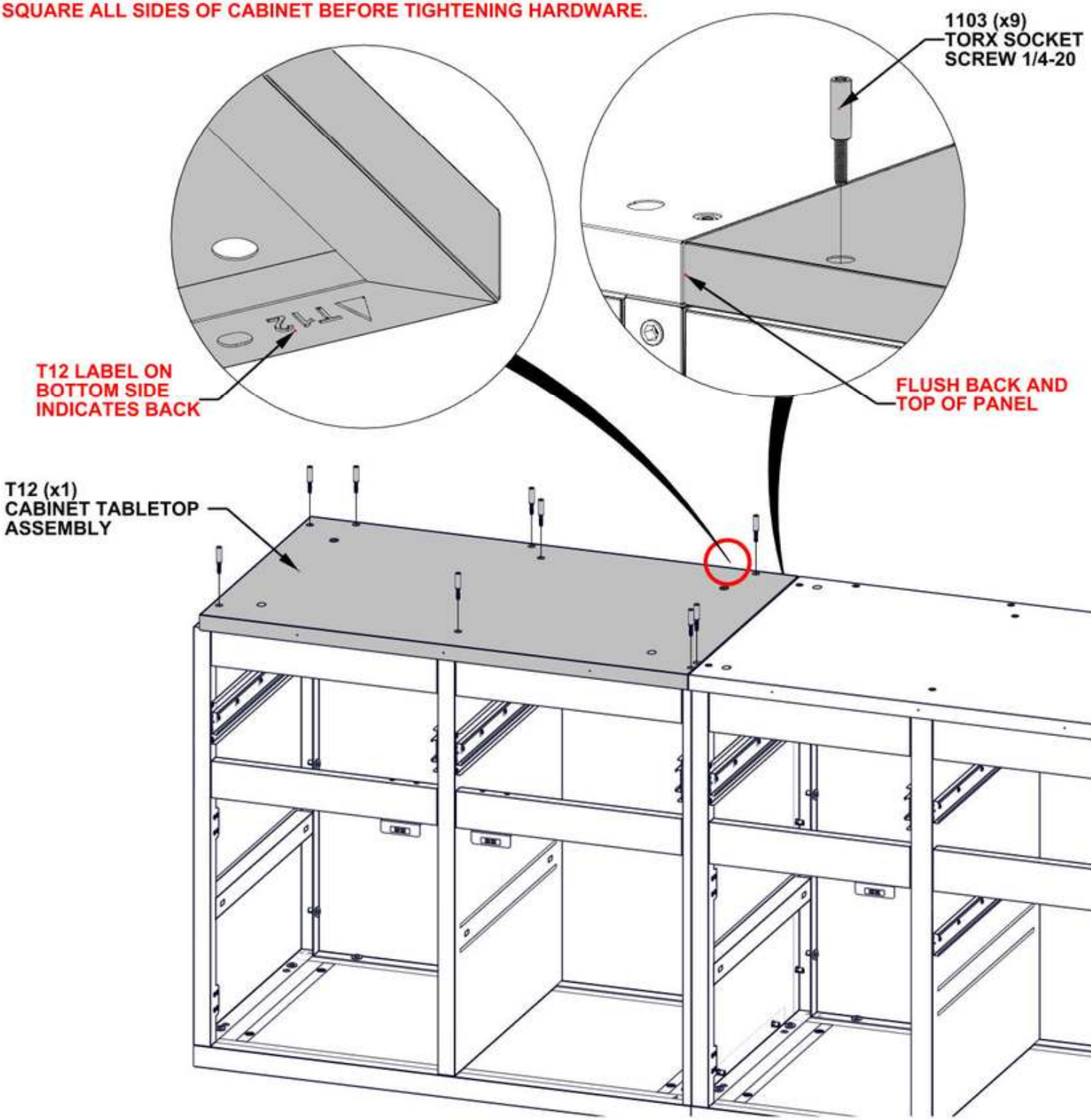

# STEP 32 - FRIDGE CABINET ASSEMBLY

| Qty | PartNo | Description |
|---|---|---|
| 2 | H101202 | TORX PAN HEAD 1/4-20x3/4 ASSY |

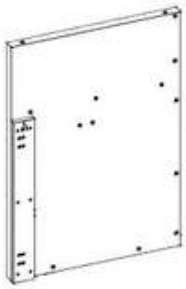

S20 CABINET SIDE PANEL ASSEMBLY R - A4M04669
(x1) 33 3/8"x23 3/8"x2 1/16" (53x594x848)

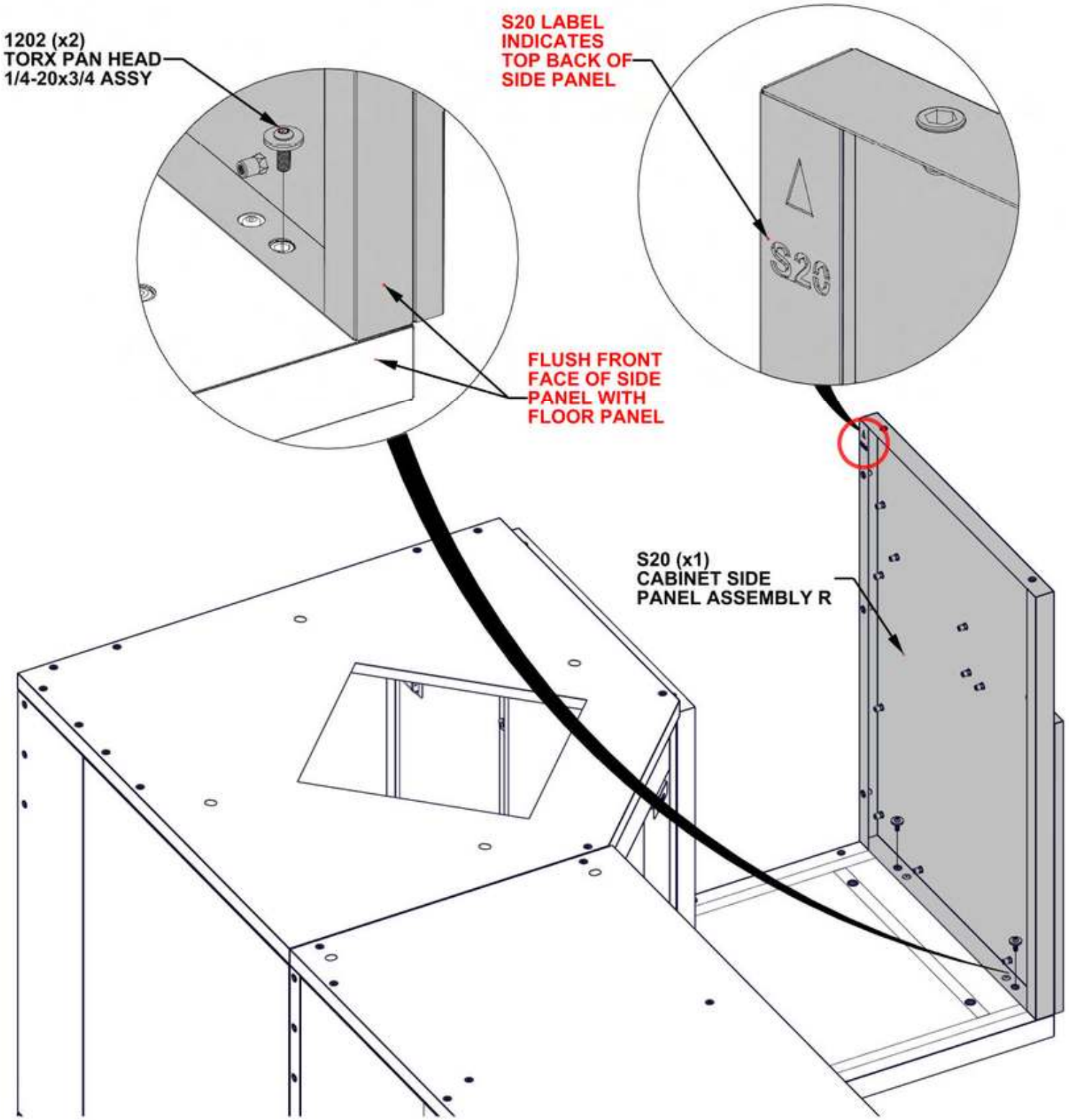

# STEP 33 - FRIDGE CABINET ASSEMBLY

| Qty | PartNo | Description |
|---|---|---|
| 9 | H101202 | TORX PAN HEAD 1/4-20x3/4 ASSY |

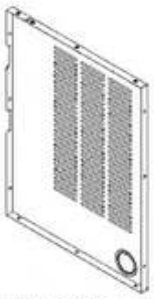

**G4 CABINET BACK PANEL ASSEMBLY - A4M03599**
**(x1) 25 5/16"x33 3/8"x1 3/16" (30x847x643)**

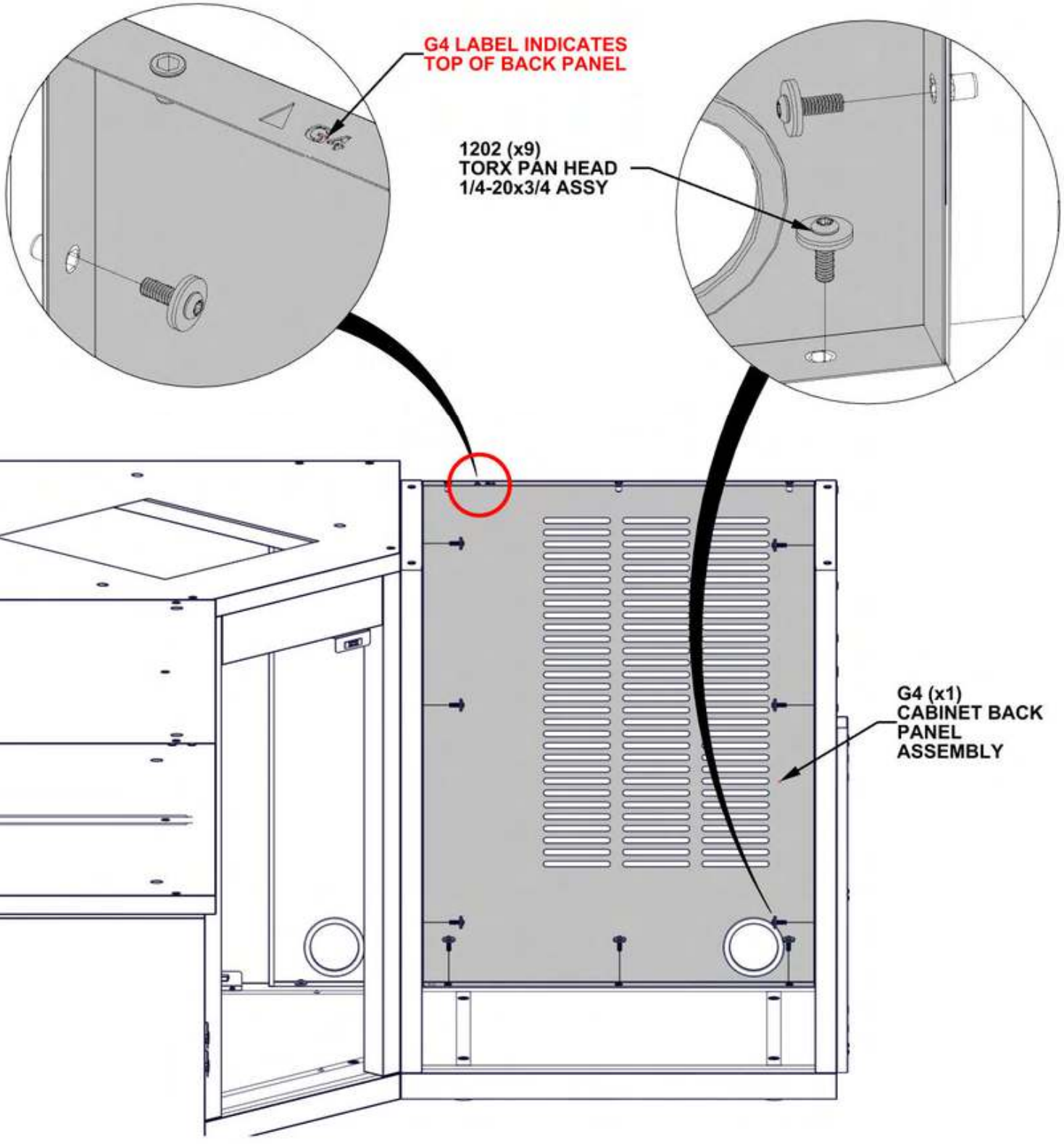

# STEP 34 - FRIDGE CABINET ASSEMBLY

| Qty | PartNo | Description |
|---|---|---|
| 7 | H101103 | TORX SOCKET SCREW 1/4-20 |

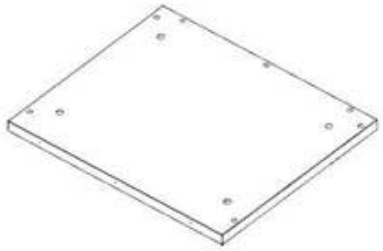

**T14 CABINET TABLETOP ASSEMBLY - A4M04701**
**(x1) 28 1/8"x24 1/8"x1 1/4" (32x612x715)**

**- FLUSH BACK AND SIDES OF PANEL ASSEMBLY.**
**- SQUARE ALL SIDES OF CABINET BEFORE TIGHTENING HARDWARE.**

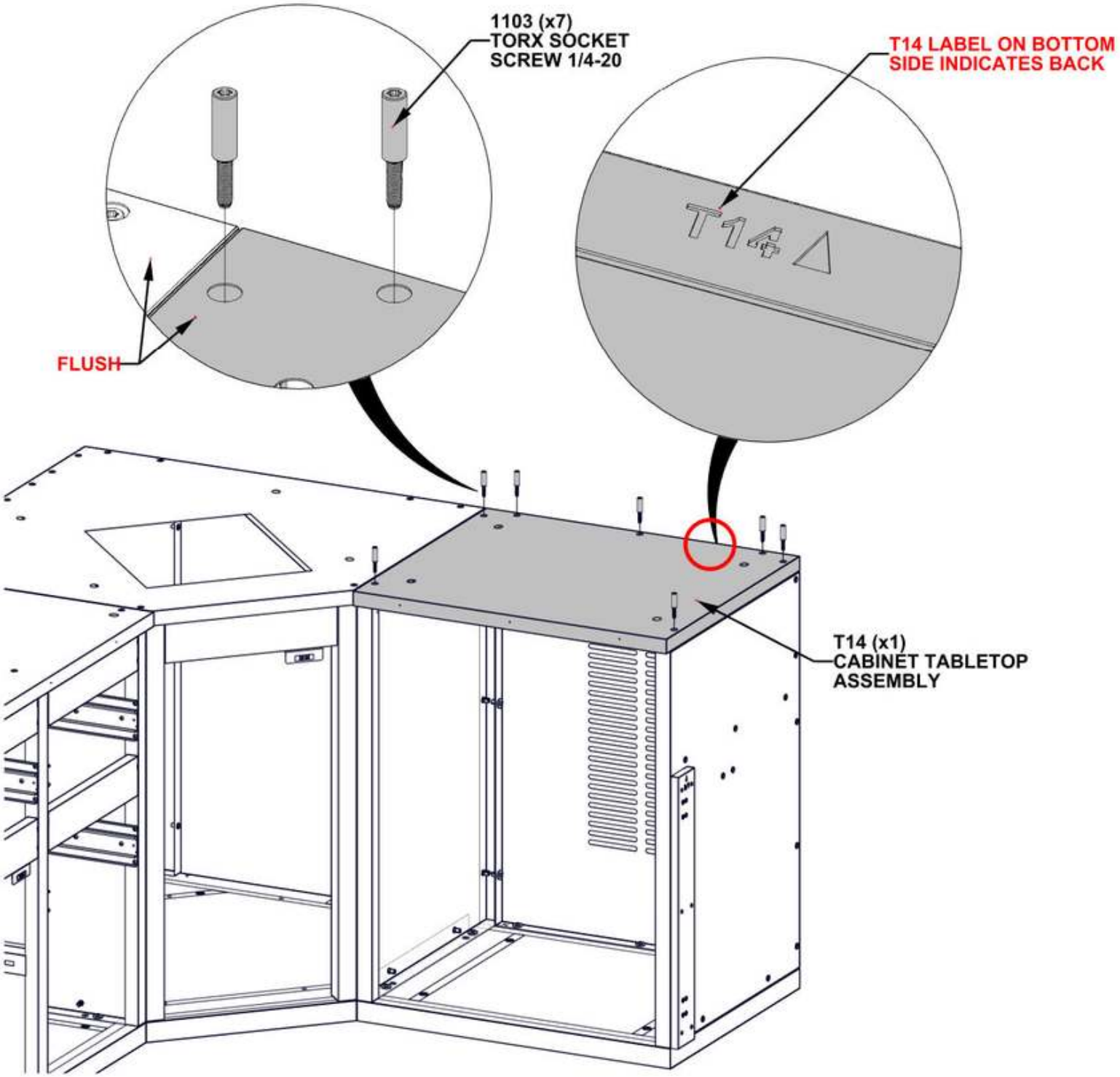

# STEP 35 - CONNECT TABLETOPS

| Qty | PartNo | Description |
|---|---|---|
| 4 | H101202 | TORX PAN HEAD 1/4-20x3/4 ASSY |

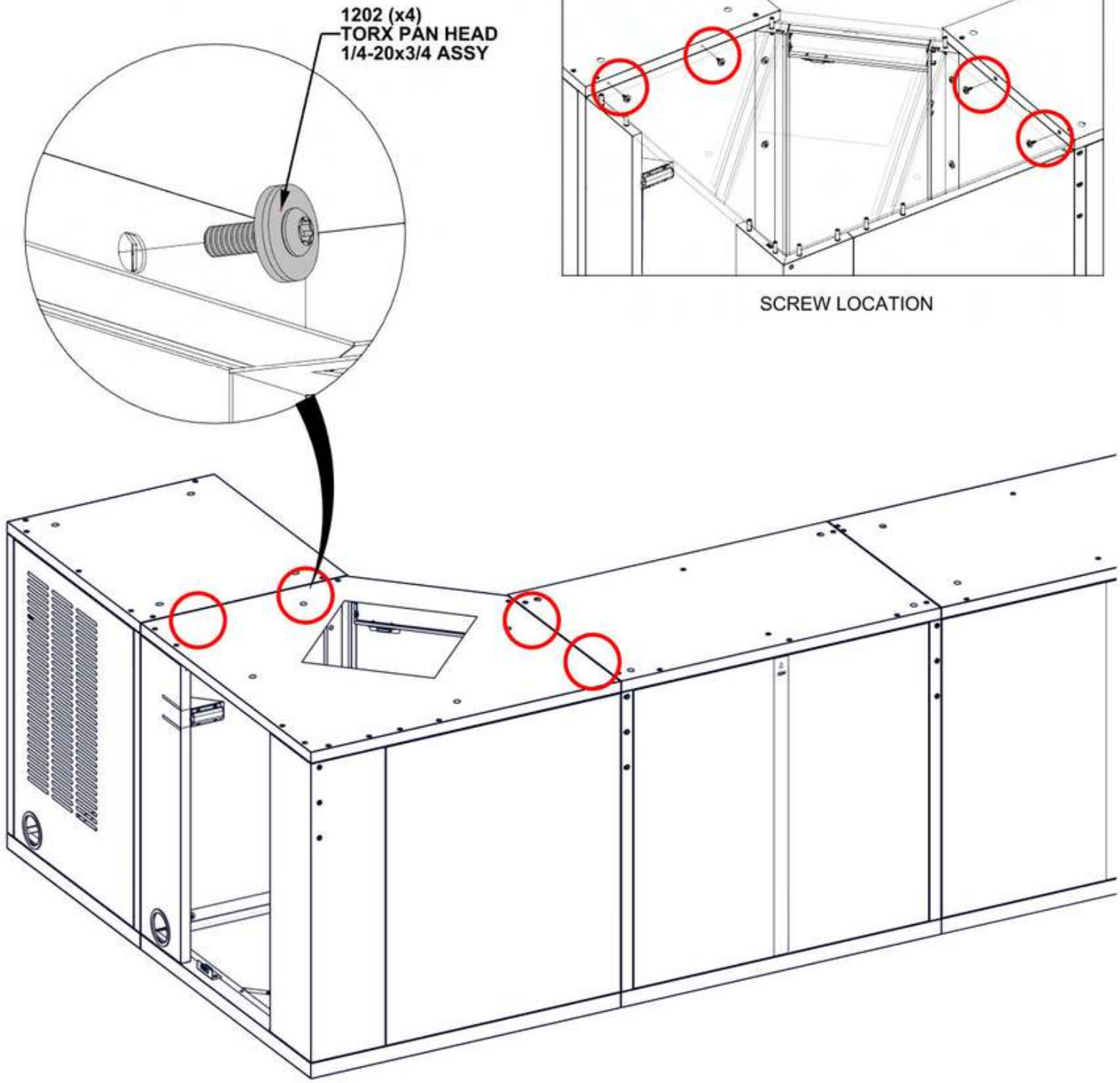

# STEP 36A - CABINET ASSEMBLY

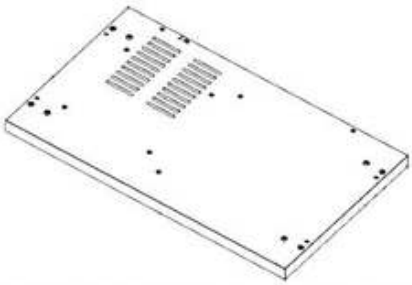

F8 CABINET FLOOR PANEL ASSEMBLY - A4M04664
(x1) 2 5/8"x23 3/8"x40 3/8" (66x594x1025)

- POSITION FLOOR PANEL AS SHOWN BELOW.
- EACH FLOOR PANEL HAS FACTORY INSTALLED ADJUSTABLE FEET. USE PROVIDED HEX DRIVER TO ADJUST EACH FOOT UNTIL PANEL IS LEVEL.

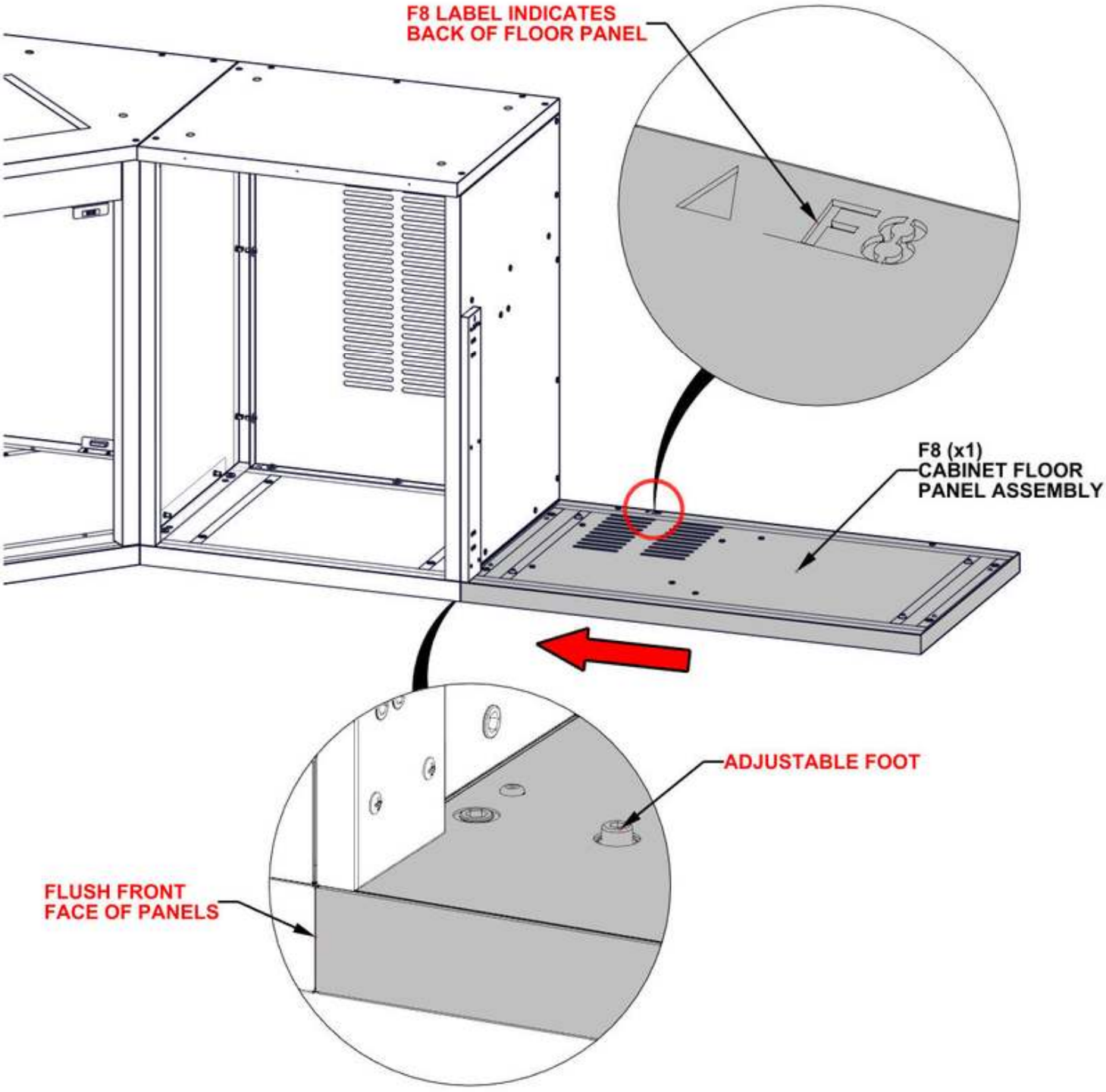

# STEP 36B - CABINET ASSEMBLY

| Qty | PartNo | Description |
|---|---|---|
| 4 | H101202 | TORX PAN HEAD 1/4-20x3/4 ASSY |

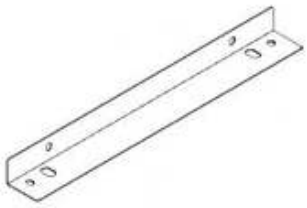

**A6 ANGLED BRACKET - A4M03053**
**(x1) 1 3/8"x1 15/16"x17 1/8" (35x50x435)**

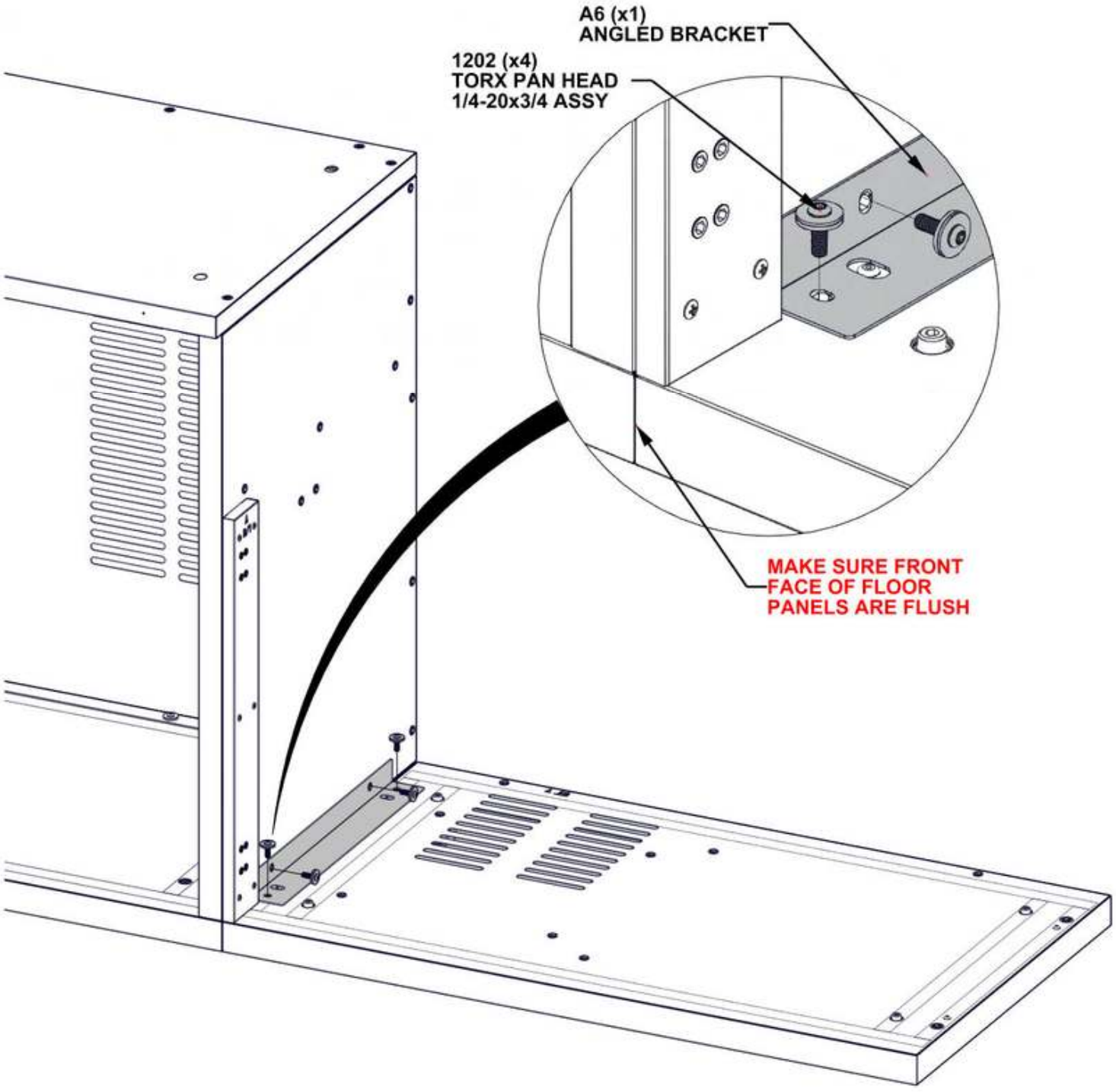

# STEP 37 - CABINET ASSEMBLY



| Qty | PartNo | Description |
|---|---|---|
| 2 | H101202 | TORX PAN HEAD 1/4-20x3/4 ASSY |

**S19 CABINET SIDE PANEL ASSEMBLY - A4M04667**
**(x1) 33 7/16"x23 3/8"x2 13/16" (71x594x849)**

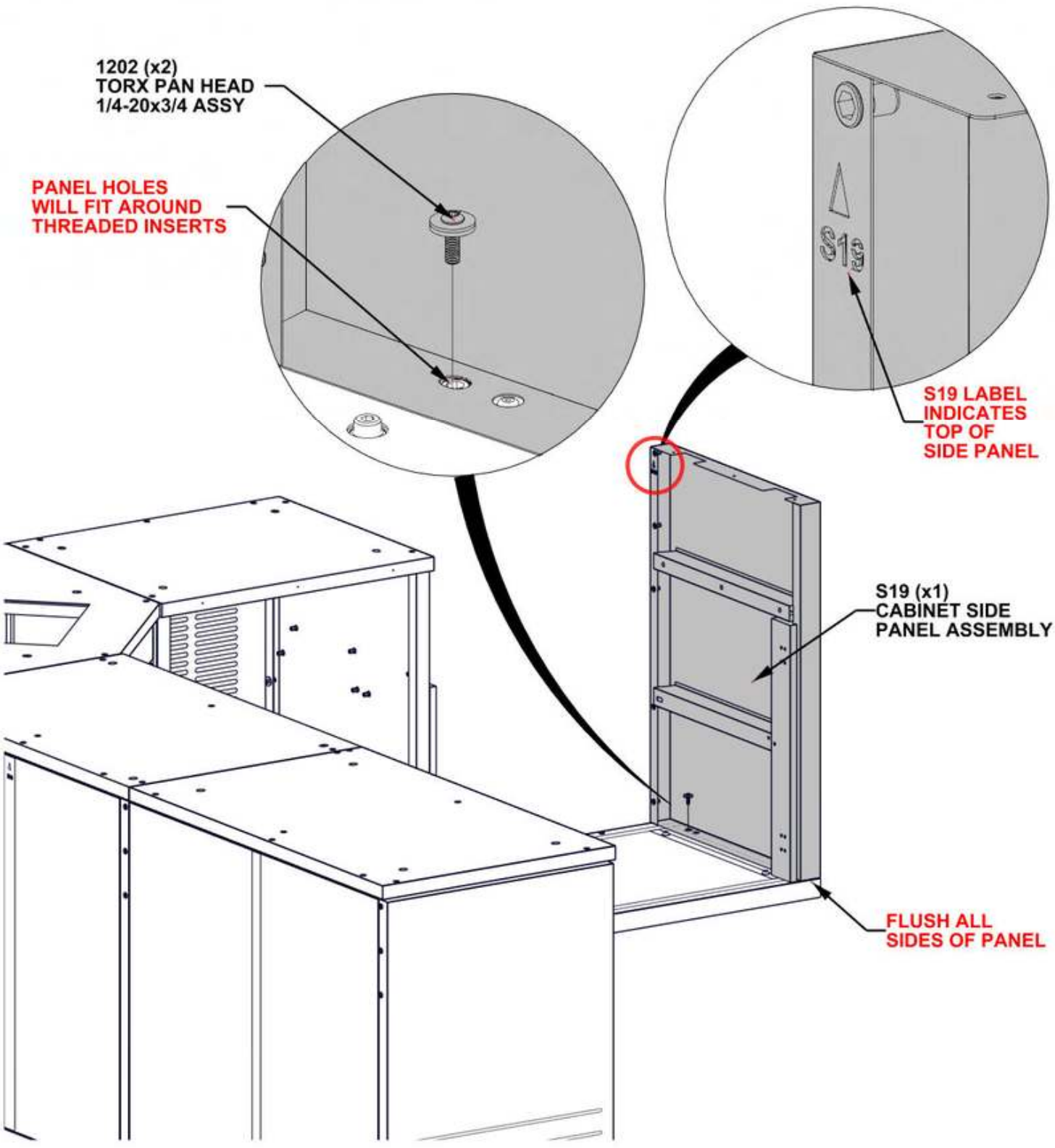

# STEP 38 - CABINET ASSEMBLY

| Qty | PartNo | Description |
|---|---|---|
| 8 | H101202 | TORX PAN HEAD 1/4-20x3/4 ASSY |

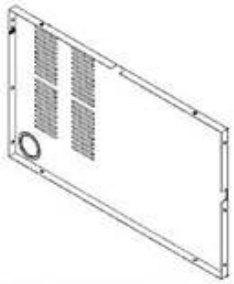

**G10 CABINET BACK PANEL ASSEMBLY - A4M03055**
**(x1) 1 3/16"x22 7/8"x38 3/16" (30x581x970)**

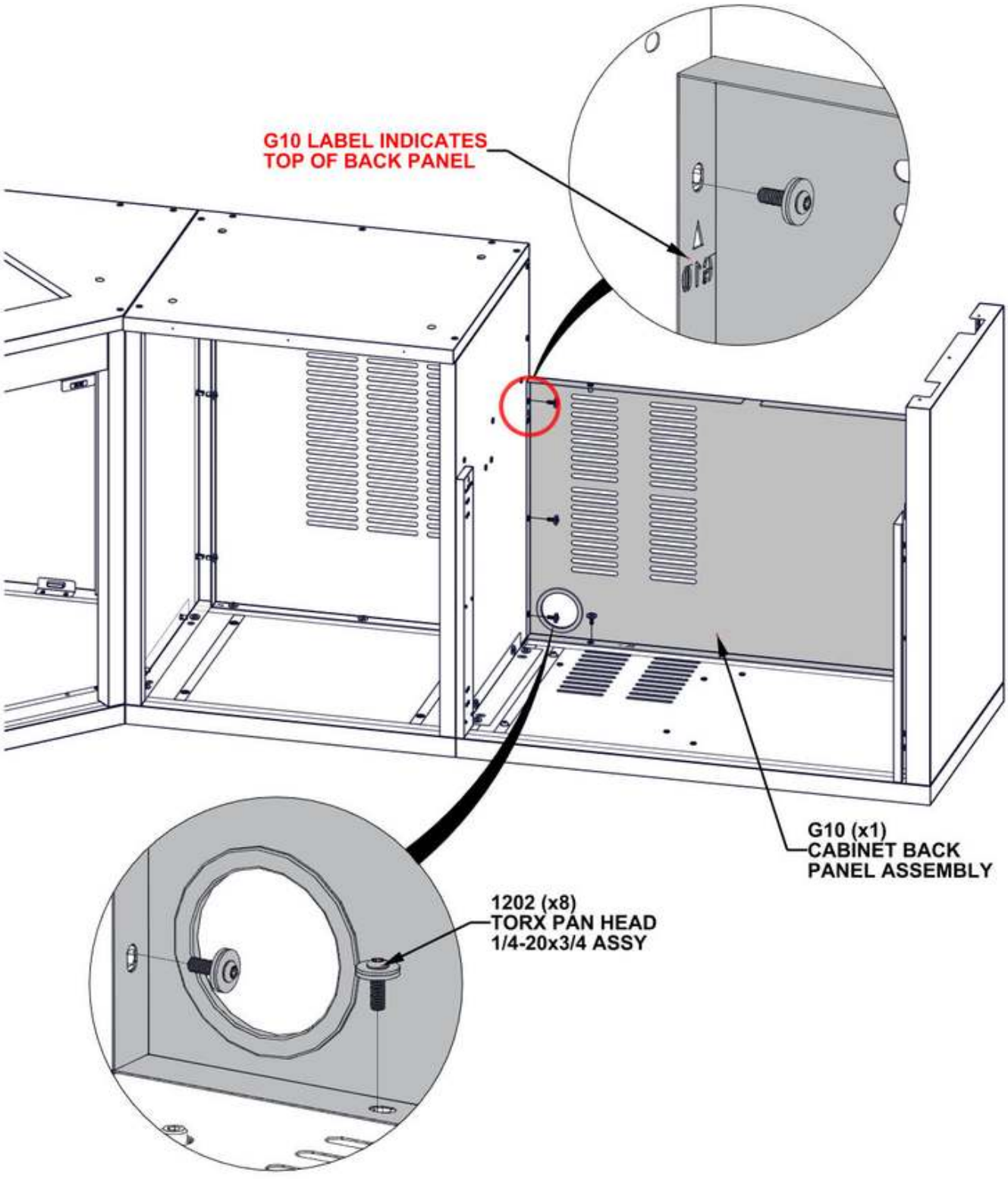

# STEP 39 - CABINET ASSEMBLY

| Qty | PartNo | Description |
|---|---|---|
| 2 | H101202 | TORX PAN HEAD 1/4-20x3/4 ASSY |

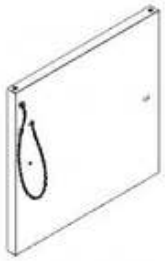

**S6 CABINET SIDE PANEL ASSEMBLY M - A4M03586**
**(x1) 23 3/8"x22 7/8"x1 3/8" (35x581x593)**

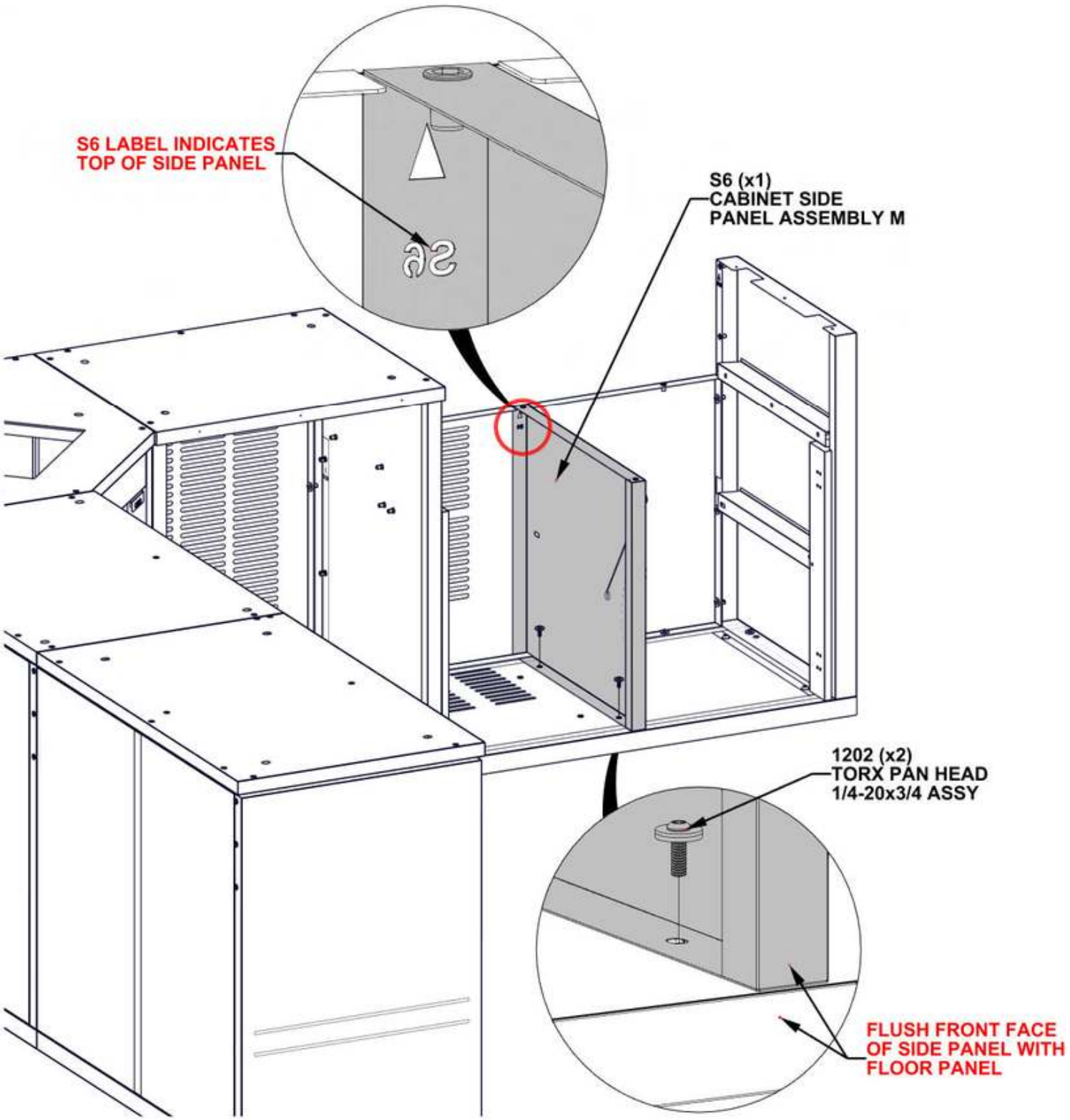

# STEP 40A - CABINET ASSEMBLY

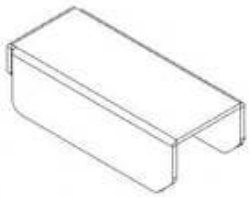

A5 SHELF BRACKET - A4M03141
(x2) 5/8"x7/8"x2 1/16" (16x22x53)

- ATTACH SHELF BRACKETS ON BOTH SIDES OF CENTER CABINET.

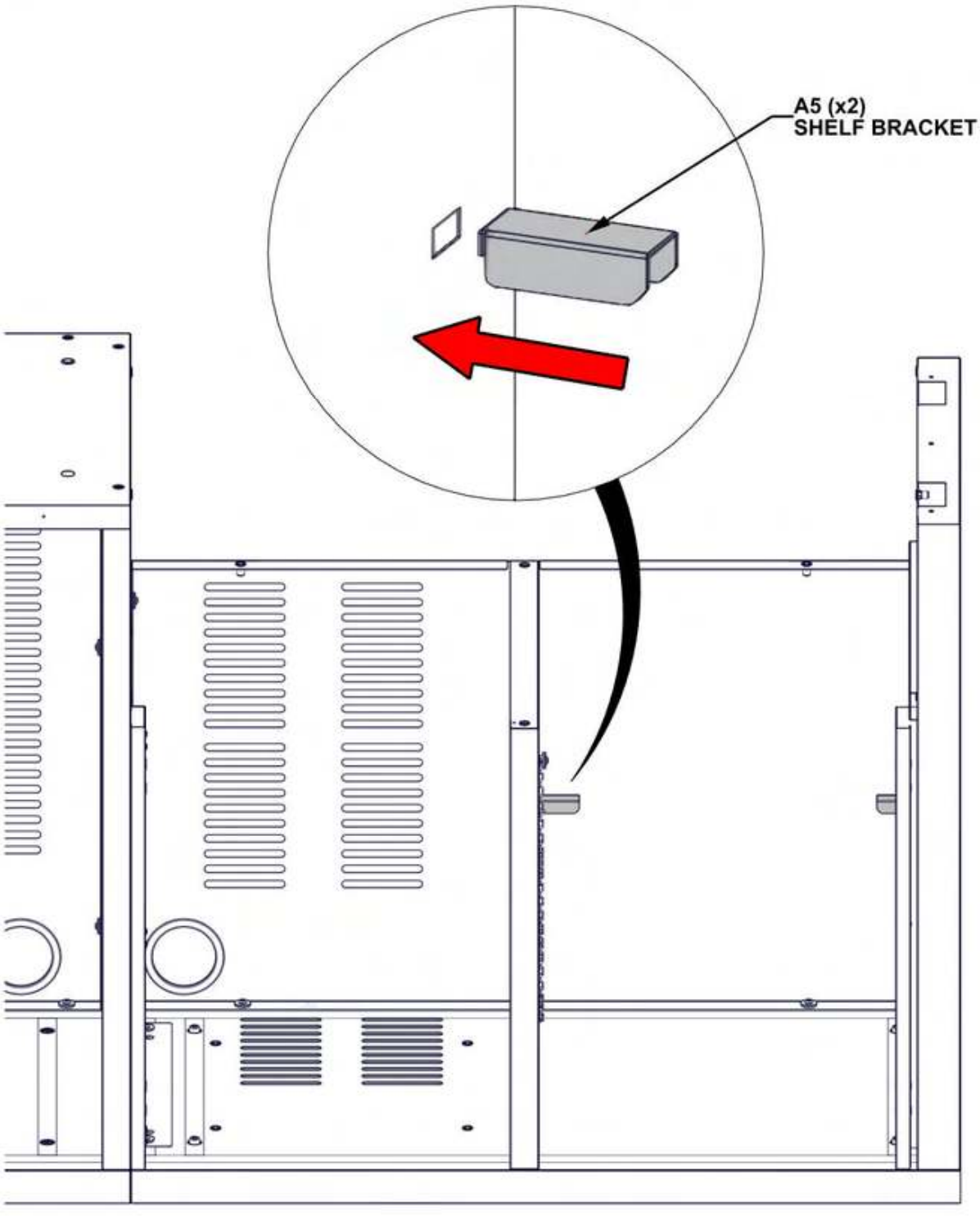

# STEP 40B - CABINET ASSEMBLY

| Qty | PartNo | Description |
|---|---|---|
| 3 | H101289 | PAN HEAD SCREW 8-32x1/2" SS |

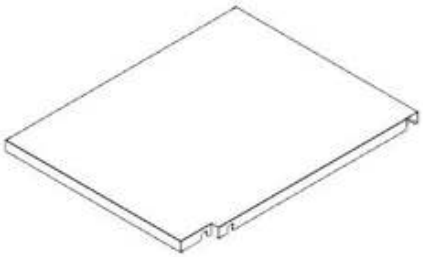

L2 CABINET SHELF ASSEMBLY - A4M03589
(x1) 23 1/4"x18 3/8"x1" (25x467x591)

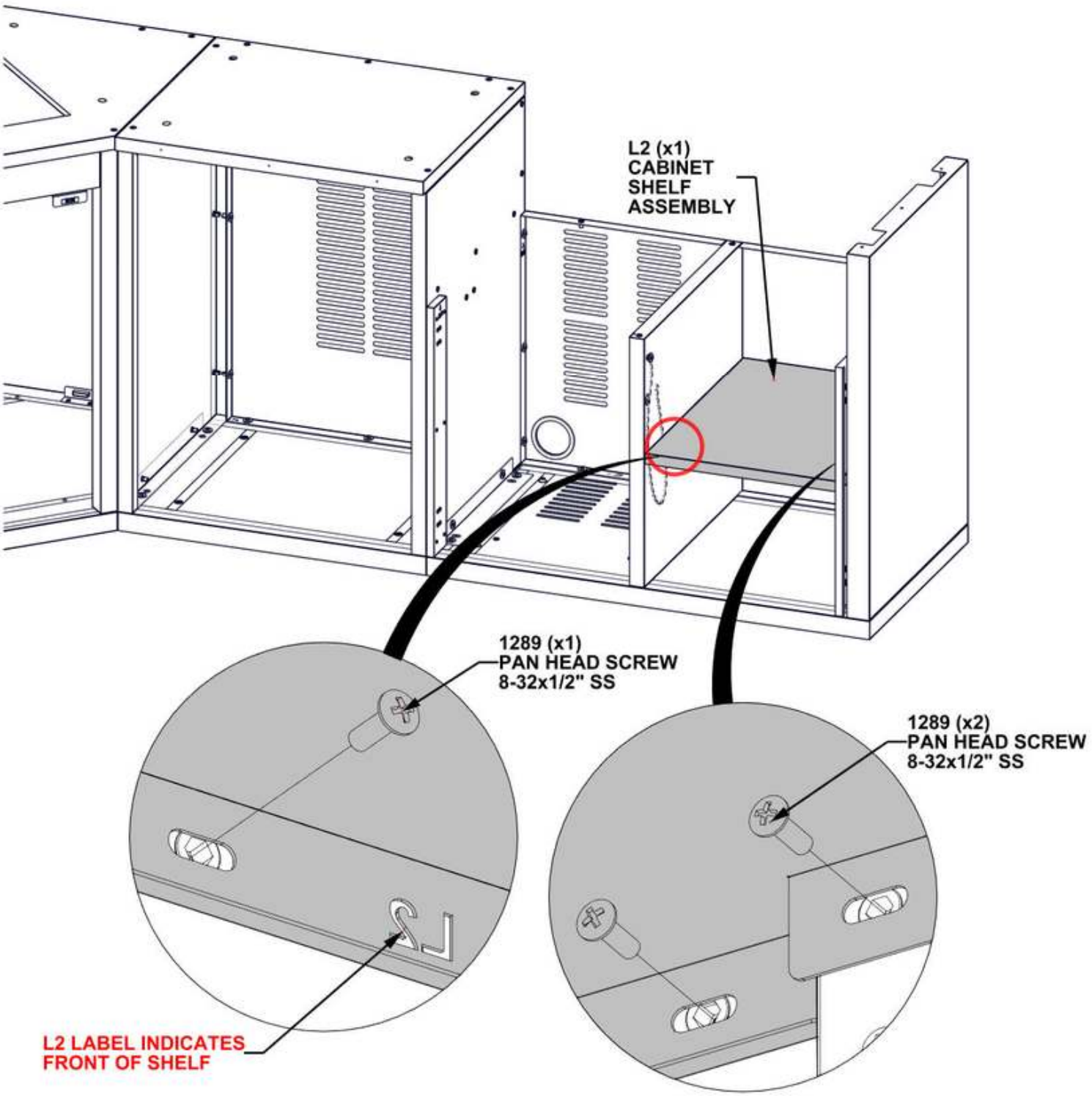

# STEP 41 - CABINET ASSEMBLY

| Qty | PartNo | Description |
|---|---|---|
| 2 | H101202 | TORX PAN HEAD 1/4-20x3/4 ASSY |

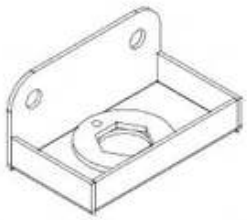

**A9 HOSE BRACKET ASSEMBLY - A4M03060**
**(x1) 1 1/4"x1 7/16"x2 9/16" (31x36x65)**

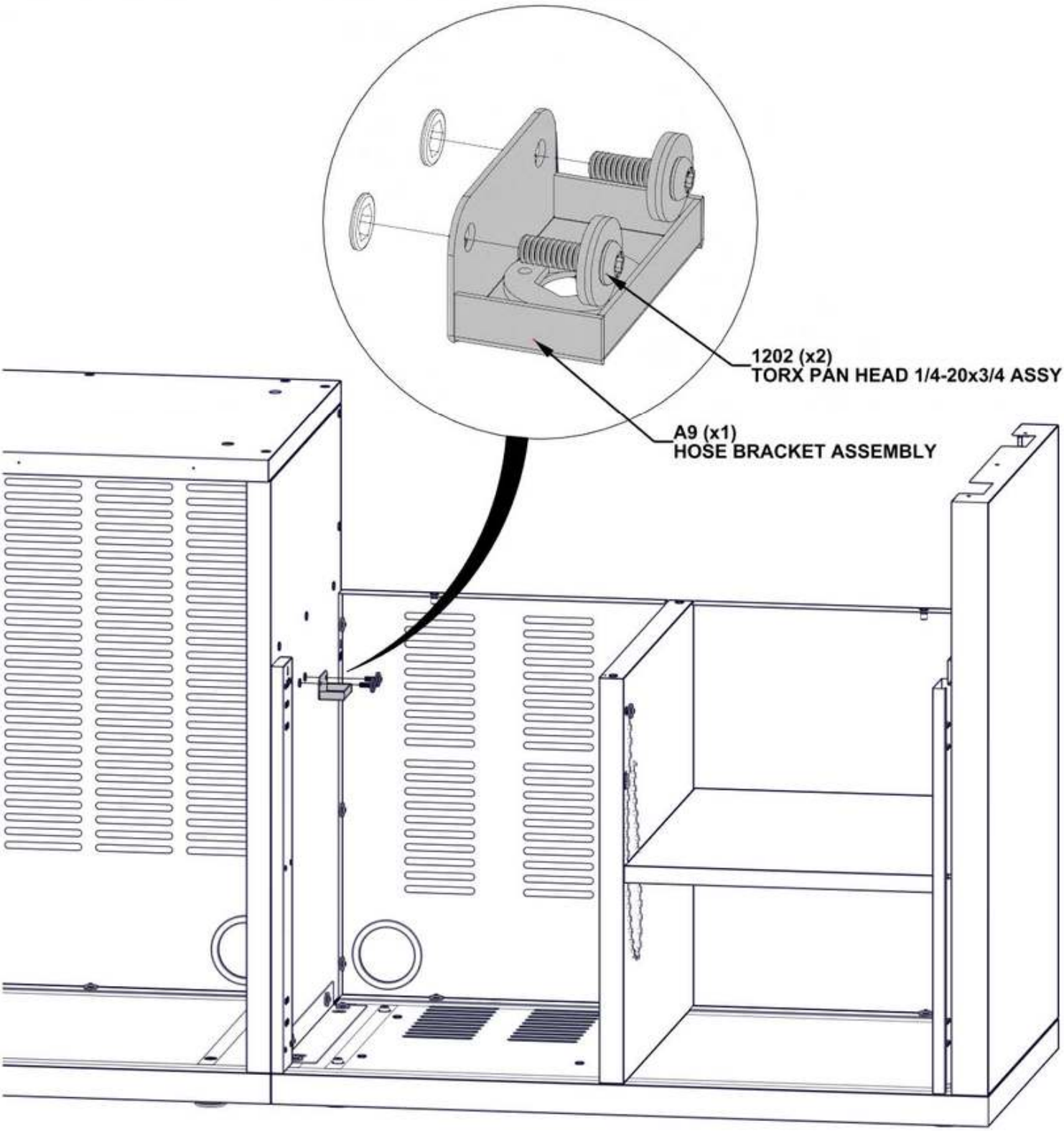

# STEP 42 - CABINET ASSEMBLY

| Qty | PartNo | Description |
|---|---|---|
| 4 | H101292 | TORX PAN HEAD 1/4-20x13/32" |

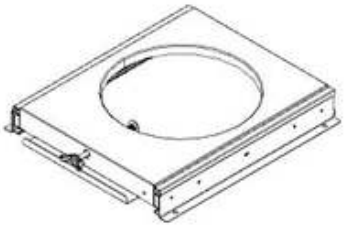

A13 GAS TANK HOLDER ASSEMBLY - A4M03047
(x1) 1 15/16"x12 7/8"x14 3/4" (49x327x374)

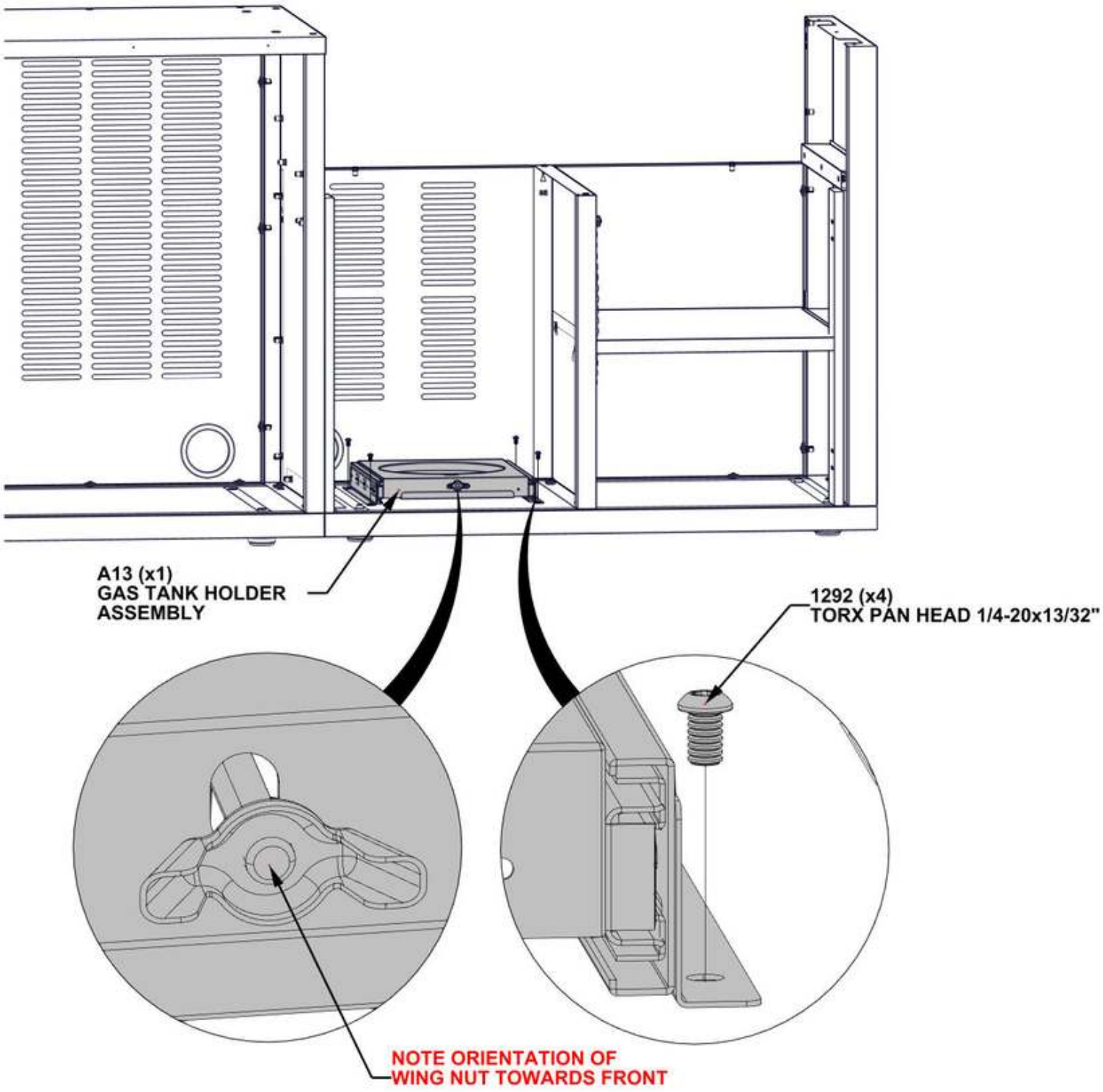

# STEP 43A - CABINET ASSEMBLY

| Qty | PartNo | Description |
|---|---|---|
| 4 | H101289 | PAN HEAD SCREW 8-32x1/2" SS |

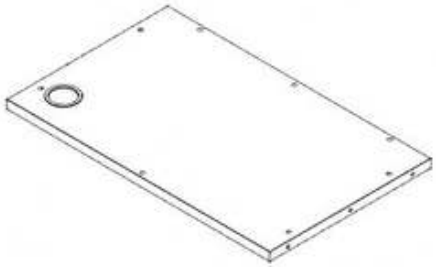

T13 TABLETOP ASSEMBLY - A4M04668
(x1) 1 1/4"x23 3/8"x38 3/16" (32x594x970)



A2 MAGNET BRACKET - A4M03026
(x2) 1"x1 1/4"x3 1/8" (25x31x80)

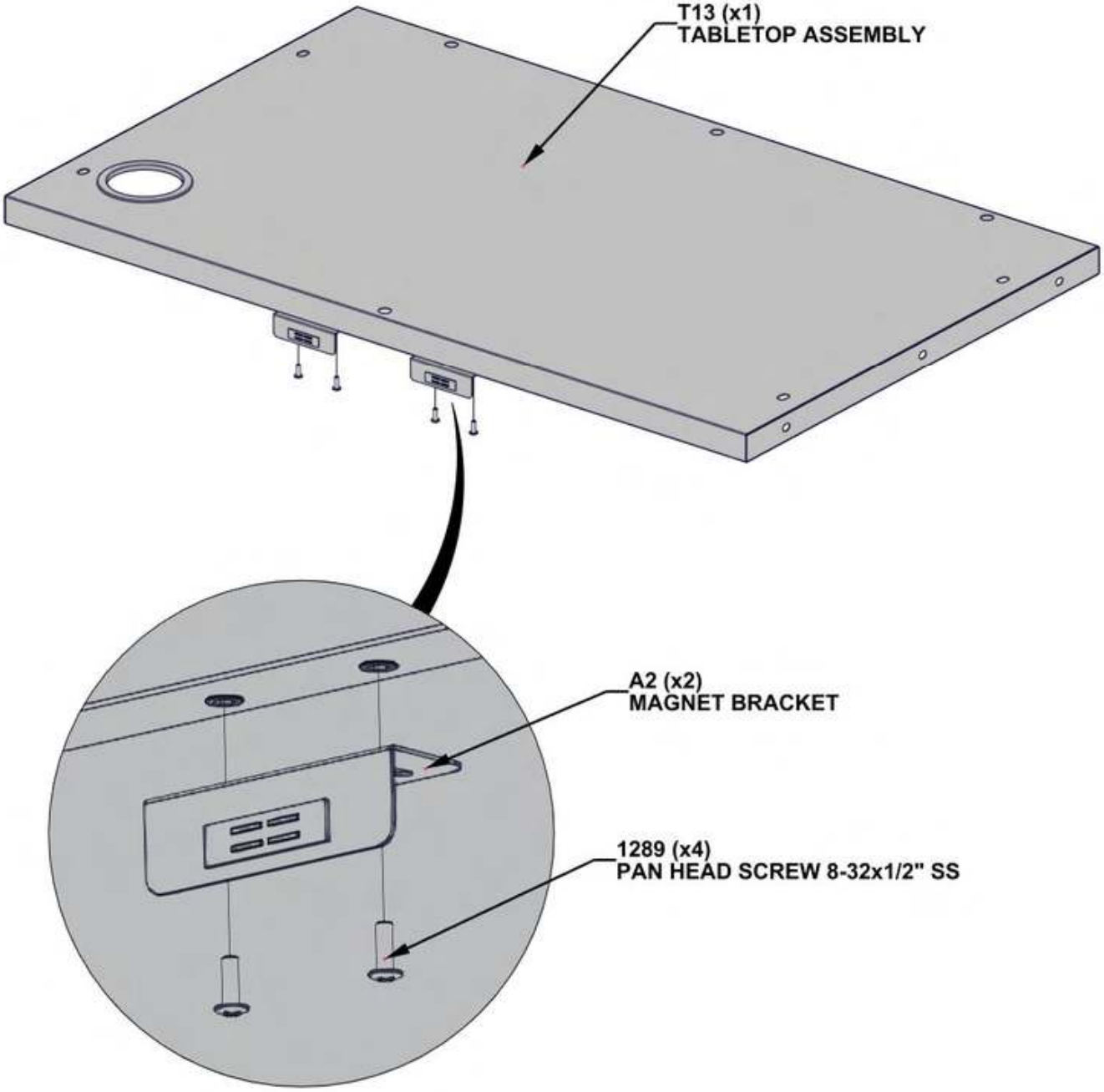

# STEP 43B - CABINET ASSEMBLY

| Qty | PartNo | Description |
|---|---|---|
| 6 | H101202 | TORX PAN HEAD 1/4-20x3/4 ASSY |

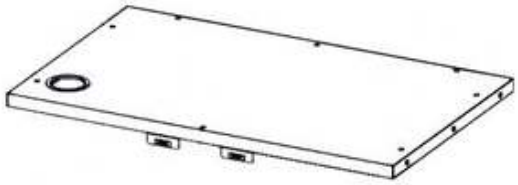

CABINET ASSEMBLY FROM STEP 43A

**- HARDWARE ATTACHES ON INSIDE OF CABINET**

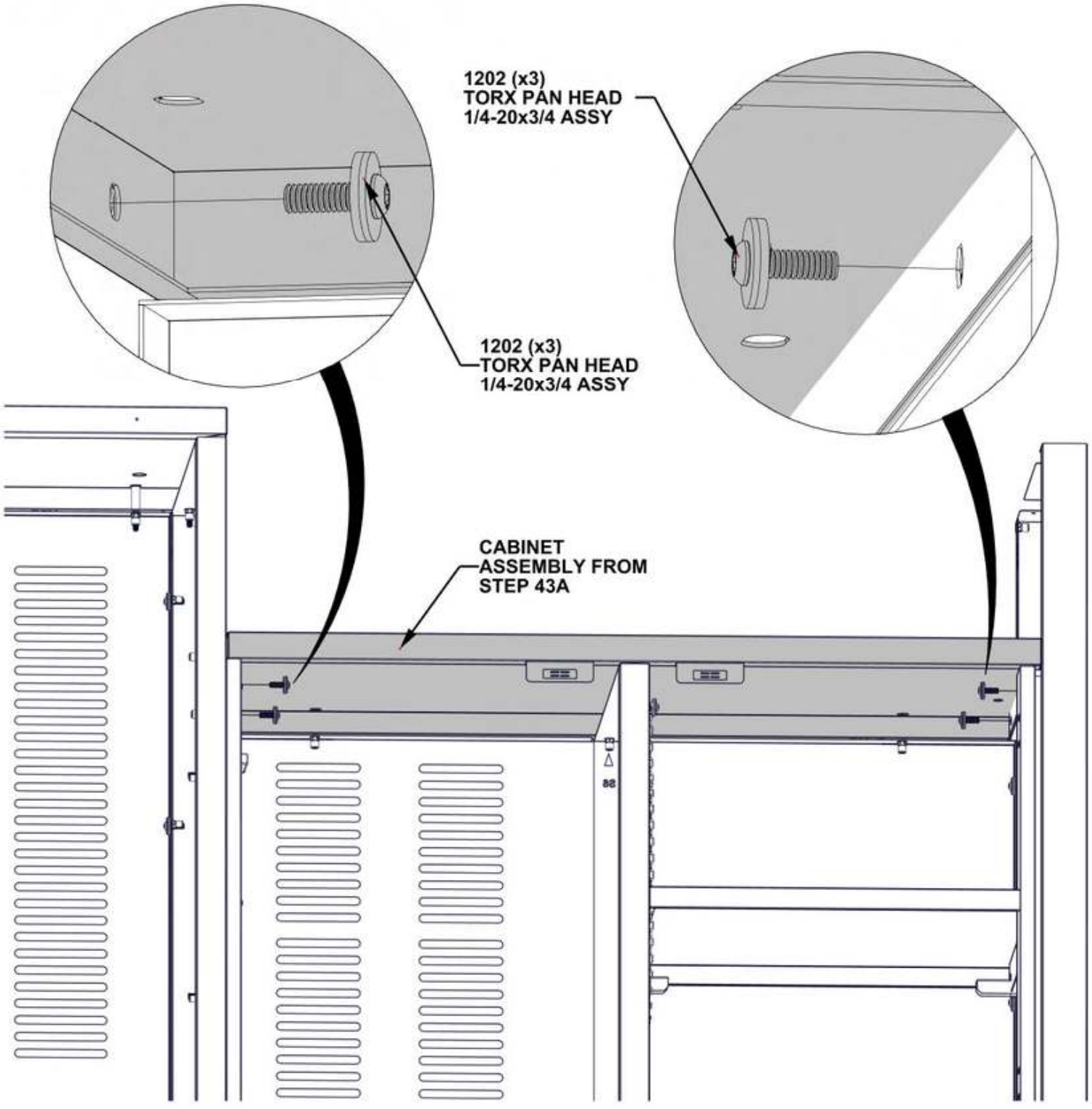

# STEP 43C - CABINET ASSEMBLY

| Qty | PartNo | Description |
|---|---|---|
| 4 | H101103 | TORX SOCKET SCREW 1/4-20 |

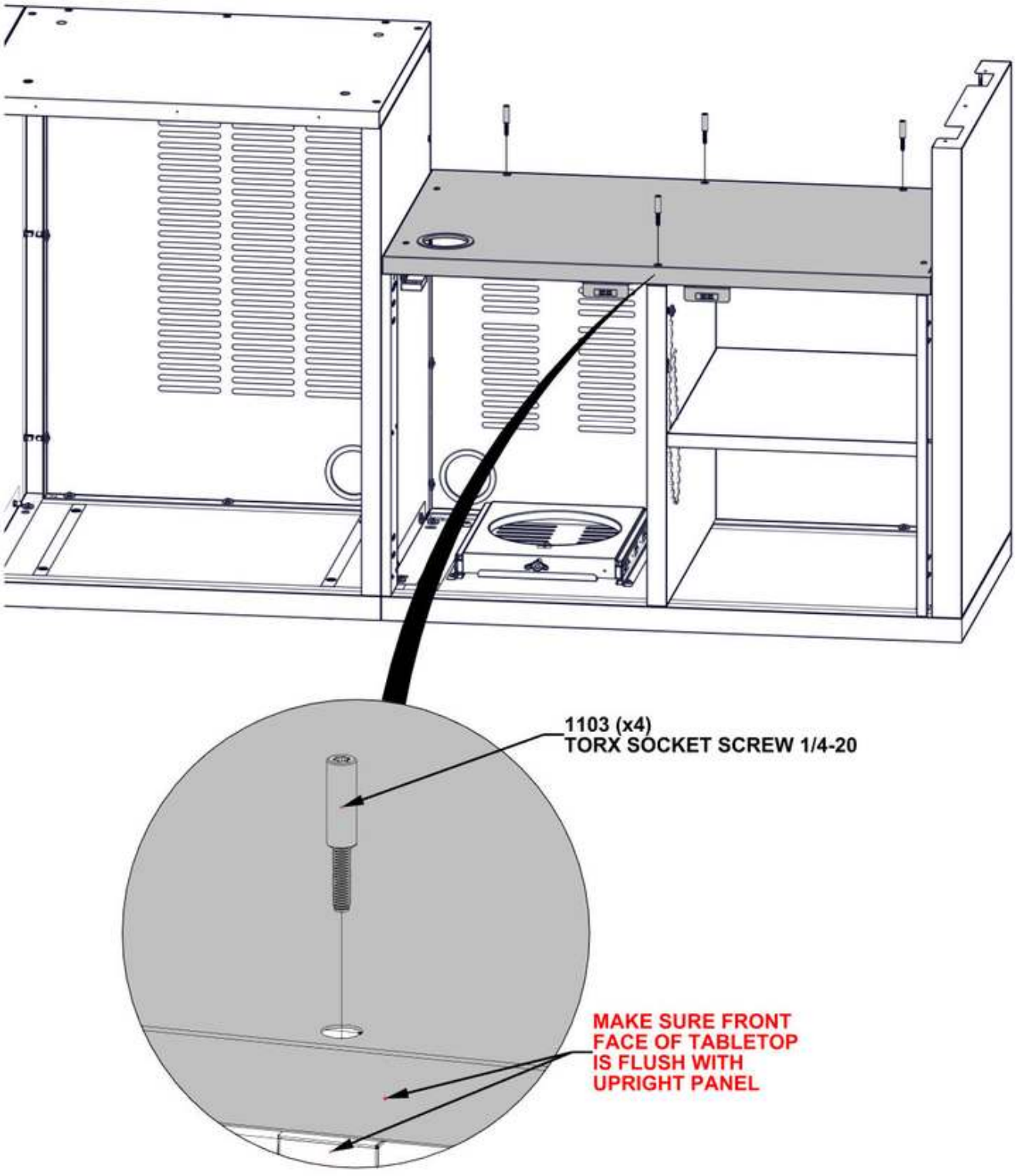

# STEP 44 - CABINET ASSEMBLY

| Qty | PartNo | Description |
|---|---|---|
| 3 | H101289 | PAN HEAD SCREW 8-32x1/2" SS |

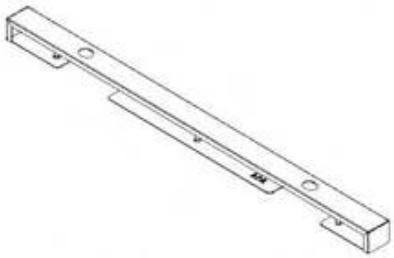

**A14 COUNTERTOP BRACKET ASSEMBLY - A4M04846**
**(x1) 24 3/16"x1 3/8"x1 1/4" (31x35x614)**

**- ALIGN SCREW HOLES.**

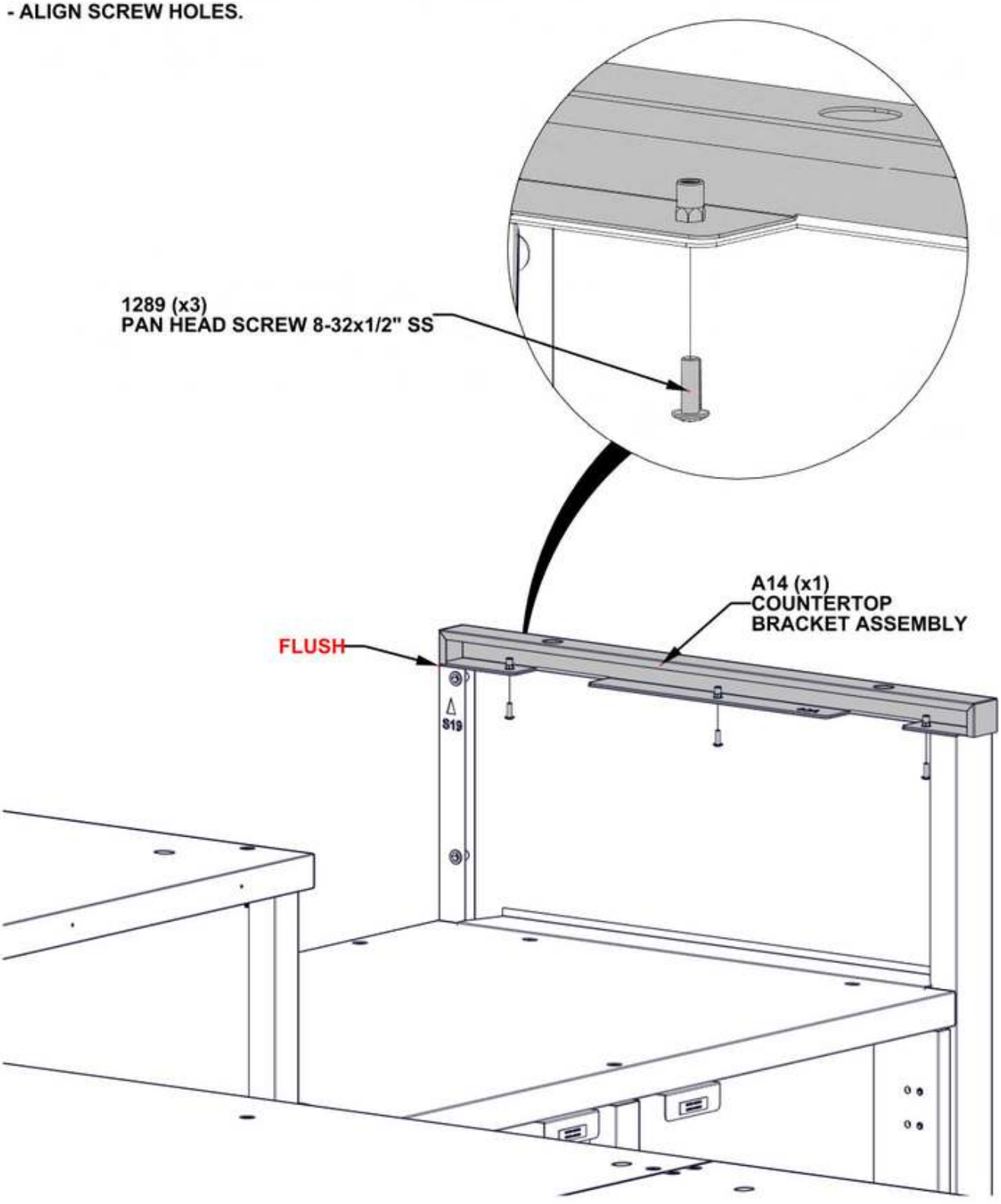

# STEP 45 - CABINET ASSEMBLY

| Qty | PartNo | Description |
|---|---|---|
| 4 | H101202 | TORX PAN HEAD 1/4-20x3/4 ASSY |

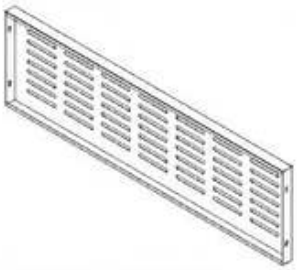

**G11 VENTILATION PANEL - A4M03056**
**(x1) 1 5/16"x11 3/16"x38 3/16" (33x284x970)**

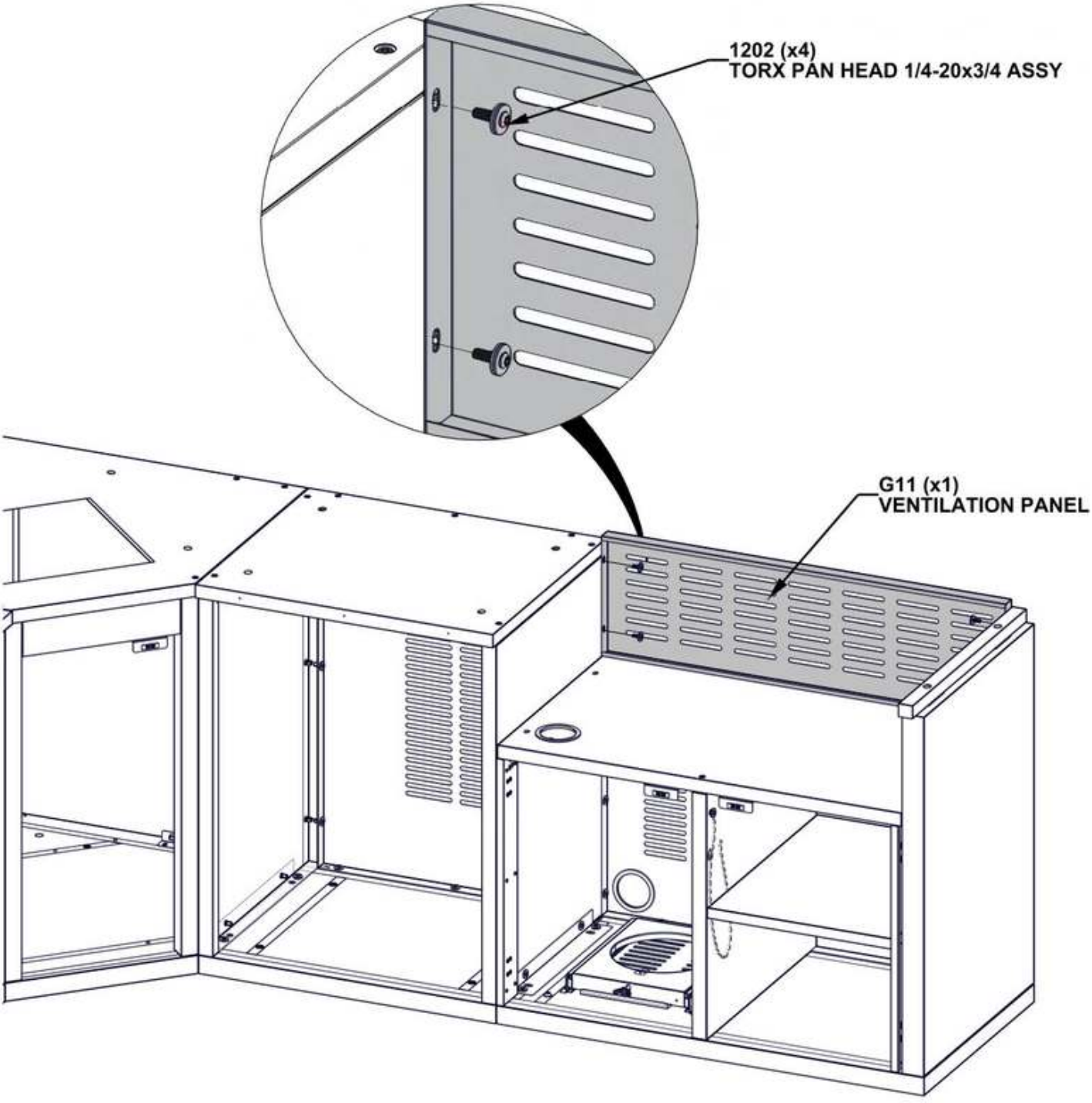

# STEP 46A - SINK INSTALLATION

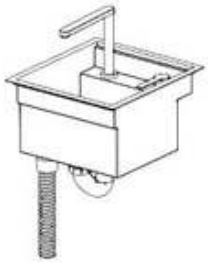

A16 SINK ASSEMBLY - A4M03143
(x1) 15 1/8"x15 5/16"x16 7/8" (384x389x429)

## 1. INSTALLING THE SINK DRAIN

- SET DRAIN INSIDE OF SINK BODY, PLACING FOAM GASKET BETWEEN SURFACES.
- FASTEN IN PLACE USING RUBBER GASET AND DRAIN NUT FROM BOTTOM SIDE.

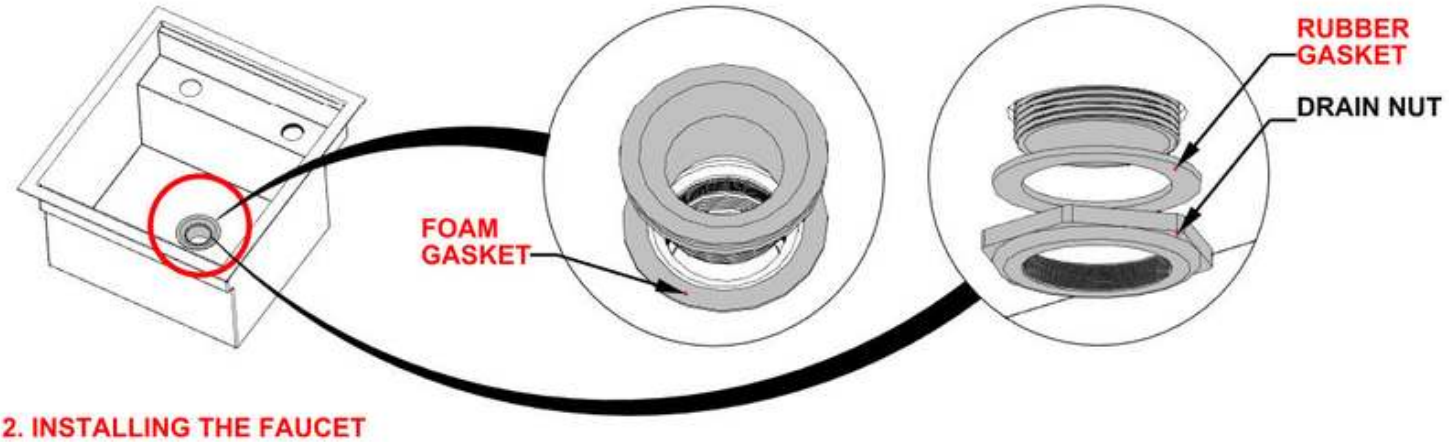


## 2. INSTALLING THE FAUCET

- INSTALL FAUCET BY PLACING HANDLE AND SPOUT INTO SINK OPENINGS AND SECURING IN PLACE VIA NUT.
- INSERT SCREWS TO LOCK.
- CONNECT WATER FAUCET LINES TOGETHER.

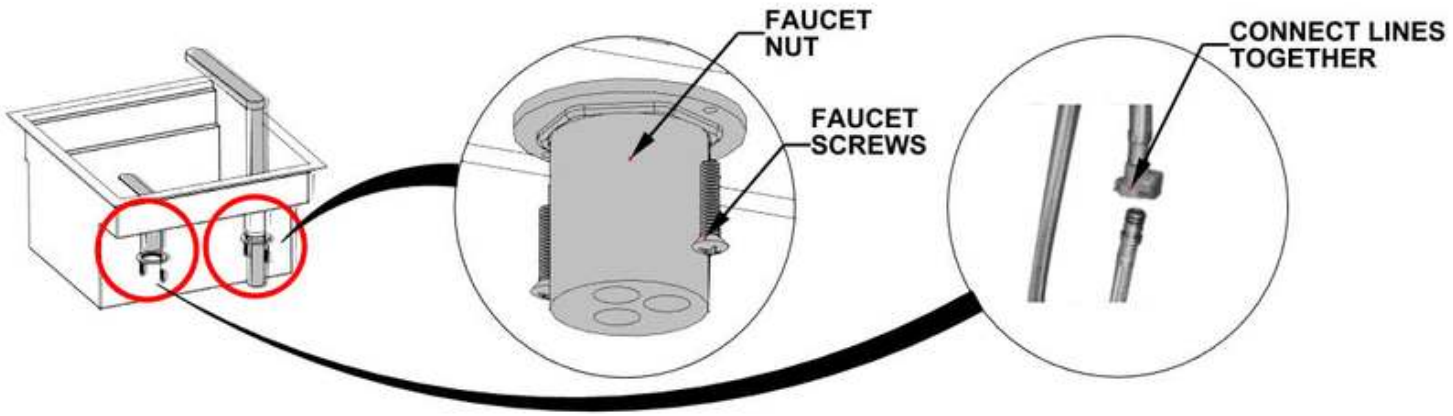


## 3. INSTALLING THE DRAIN FITTING

- ATTACH DRAIN FITTING TO SINK DRAIN.

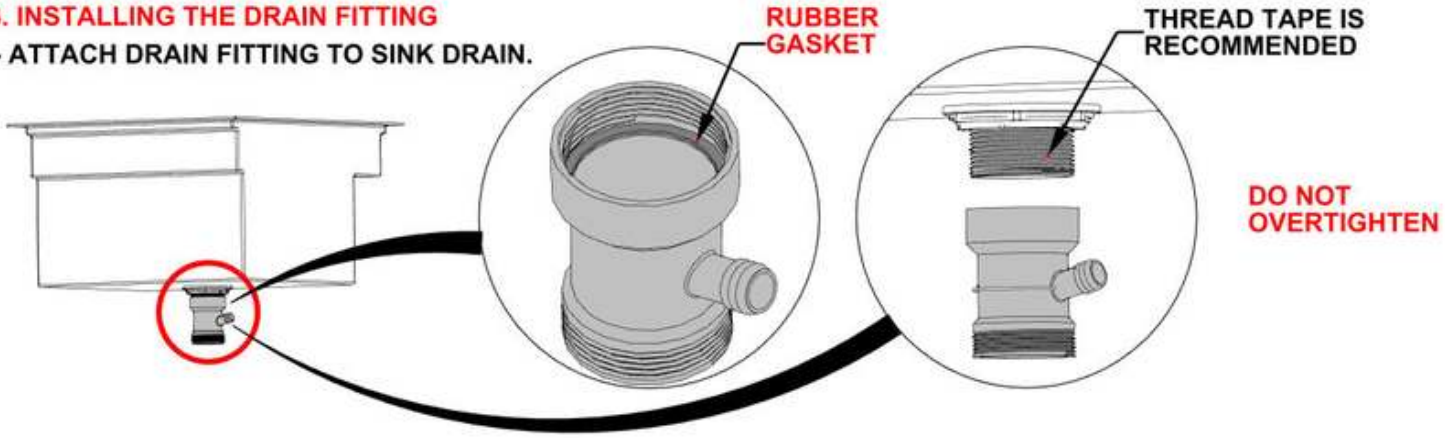

# STEP 46B - SINK INSTALLATION

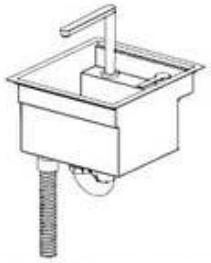

A16 SINK ASSEMBLY - A4M03143
(x1) 15 1/8"x15 5/16"x16 7/8" (384x389x429)

## 4. INSTALLING THE OVERFLOW DRAIN

- MAKE SURE RUBBER GASKET IS INSTALLED IN OVERFLOW DRAIN.
- INSERT DRAIN SCREW TO HOLD IN PLACE.

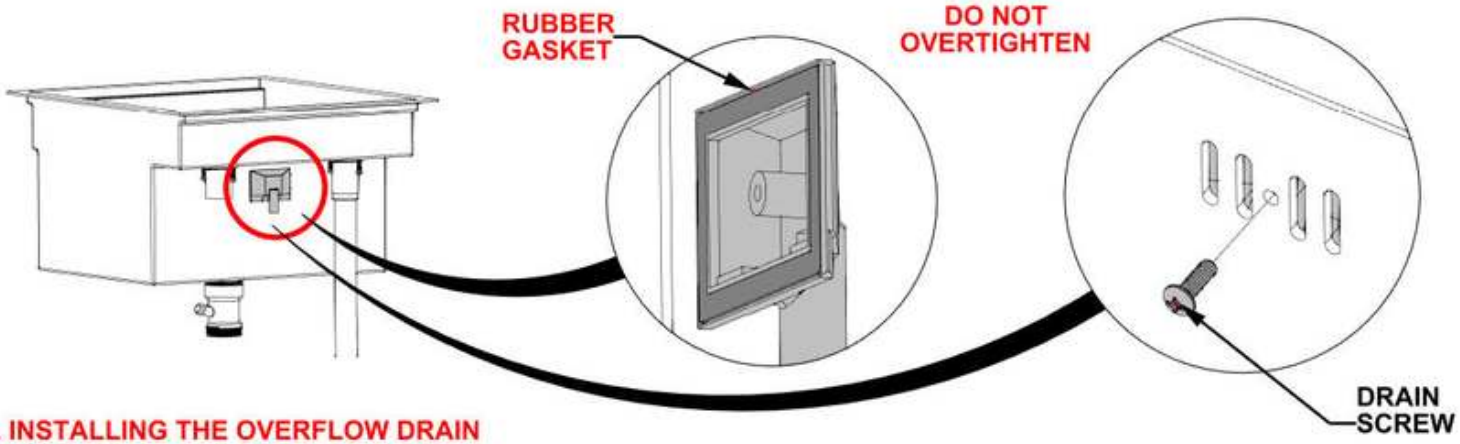


## 5. INSTALLING THE OVERFLOW DRAIN

- ATTACH OVERFLOW DRAIN BY CONNECTING EACH END AS SHOWN.

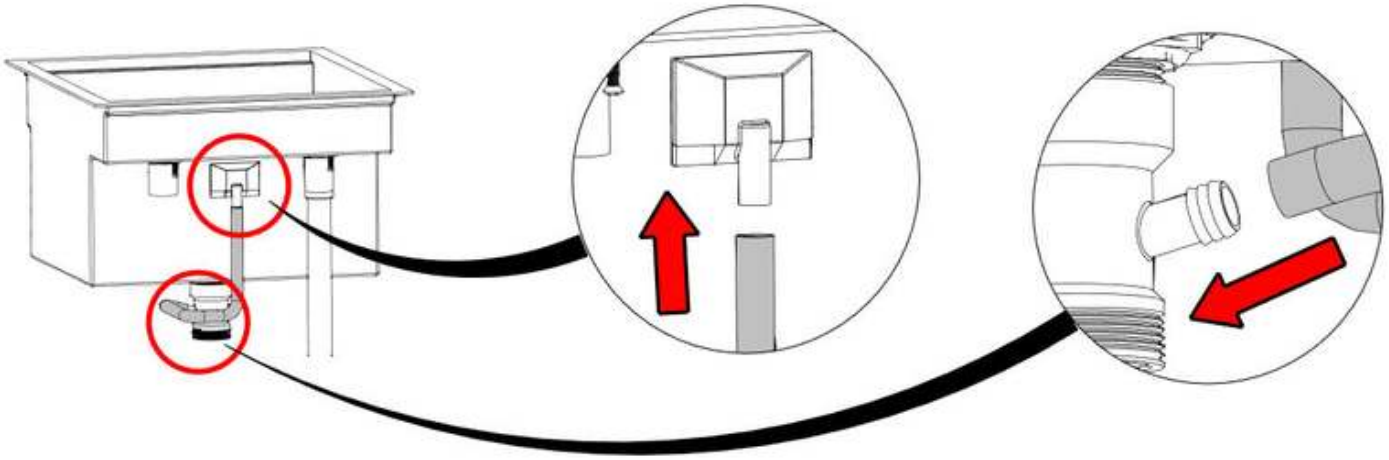

## 6. INSTALLING THE MAIN DRAIN AND TRAP

- ATTACH TRAP AND CORRUGATED DRAIN HOSE TO DRAIN FITTING.

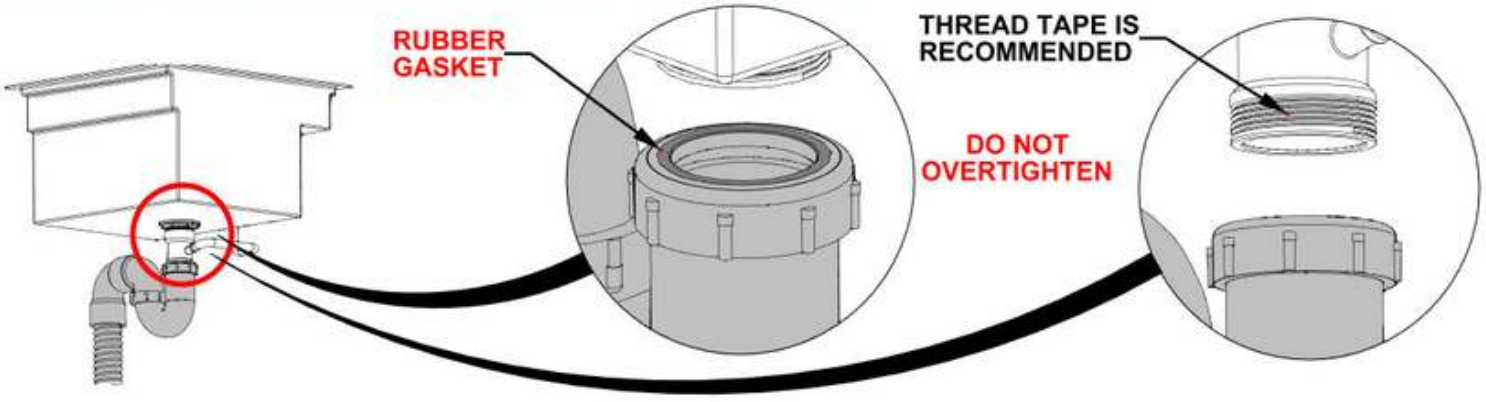

# STEP 46C - SINK INSTALLATION

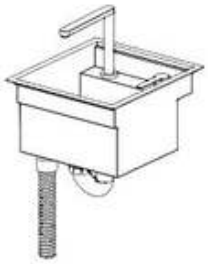

A16 (x1) SINK ASSEMBLY - A4M03143
15 1/8"x15 5/16"x16 7/8" (384x389x429)



A4M03151 (x1) GARDEN HOSE ADAPTER

- SINK IS DESIGNED TO FIT SNUG. GENTLY PRESS THE SIDES OF THE SINK IN AS YOU LOWER SINK BODY INTO PANEL.
- DRAIN STRAINER MUST BE USED WHEN DISCARDING FOOD INSIDE OF SINK.
- DO NOT LET SOLID MATERIAL ENTER SINK BASIN.

**OPTIONS FOR WATER INLET SUPPLY HOOKUP:**

- GARDEN HOSE ATTACHMENT USING PROVIDED ADAPTER
- WATER INLET SUPPLY LINE

**OPTIONS FOR DRAIN DISCHARGE:**

- BUCKET OR GREY WATER CONTAINER
- FRENCH DRAIN OR DRY BASIN
- INTEGRATED SEWER SYSTEM
- CHECK YOUR LOCAL REQUIRMENTS.

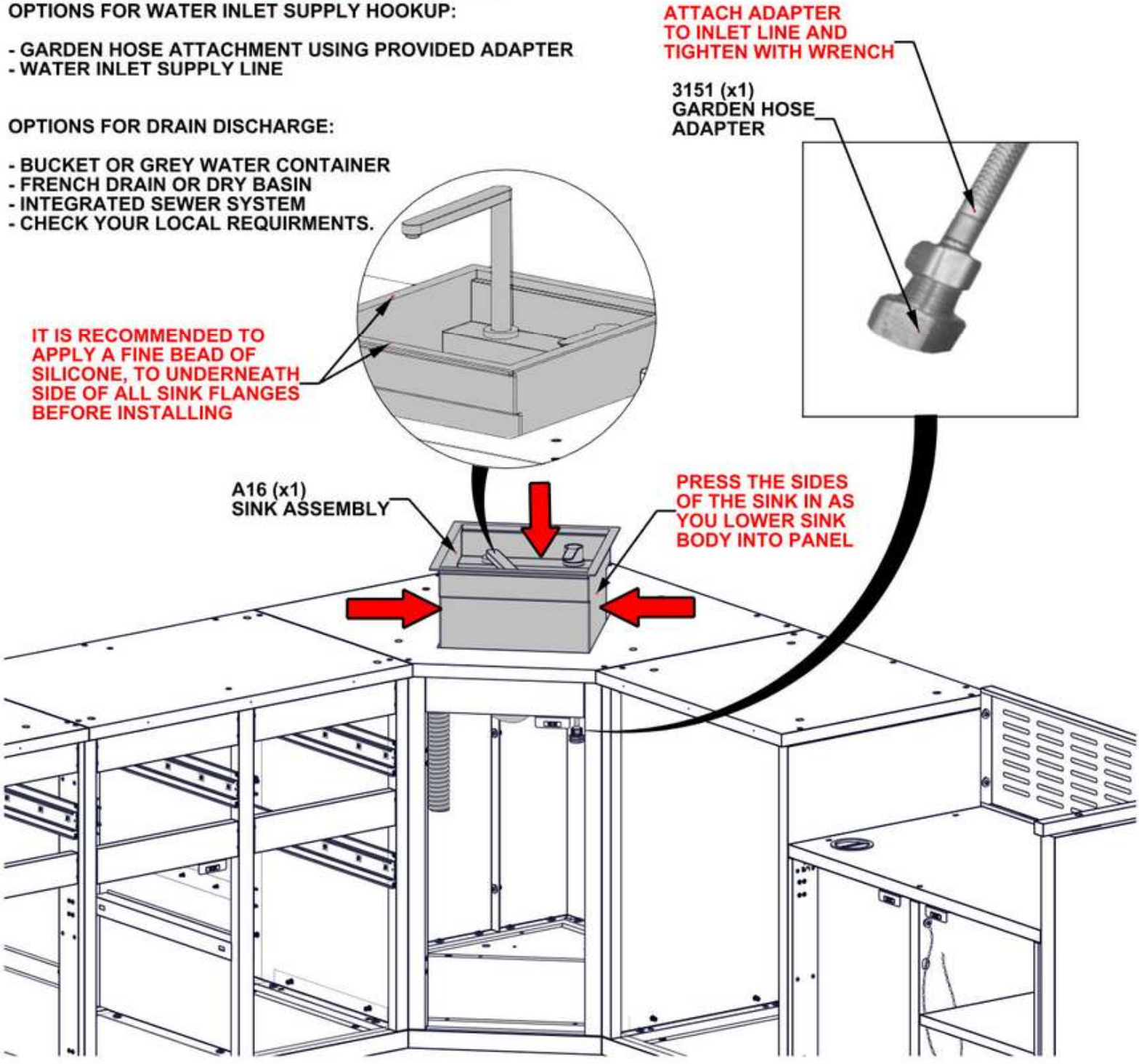

# STEP 47A - BAR TABLE INSTALLATION

| Qty | PartNo | Description |
|---|---|---|
| 12 | H101202 | TORX PAN HEAD 1/4-20x3/4 ASSY |

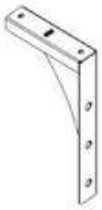

A19 TRIANGLE BRACKET L - A4M04727
(x2) 14 11/16"x7 7/8"x1 15/16" (50x200.00x373.1)



A20 TRIANGLE BRACKET R - A4M04728
(x2) 14 11/16"x7 7/8"x1 15/16" (50x200x373)

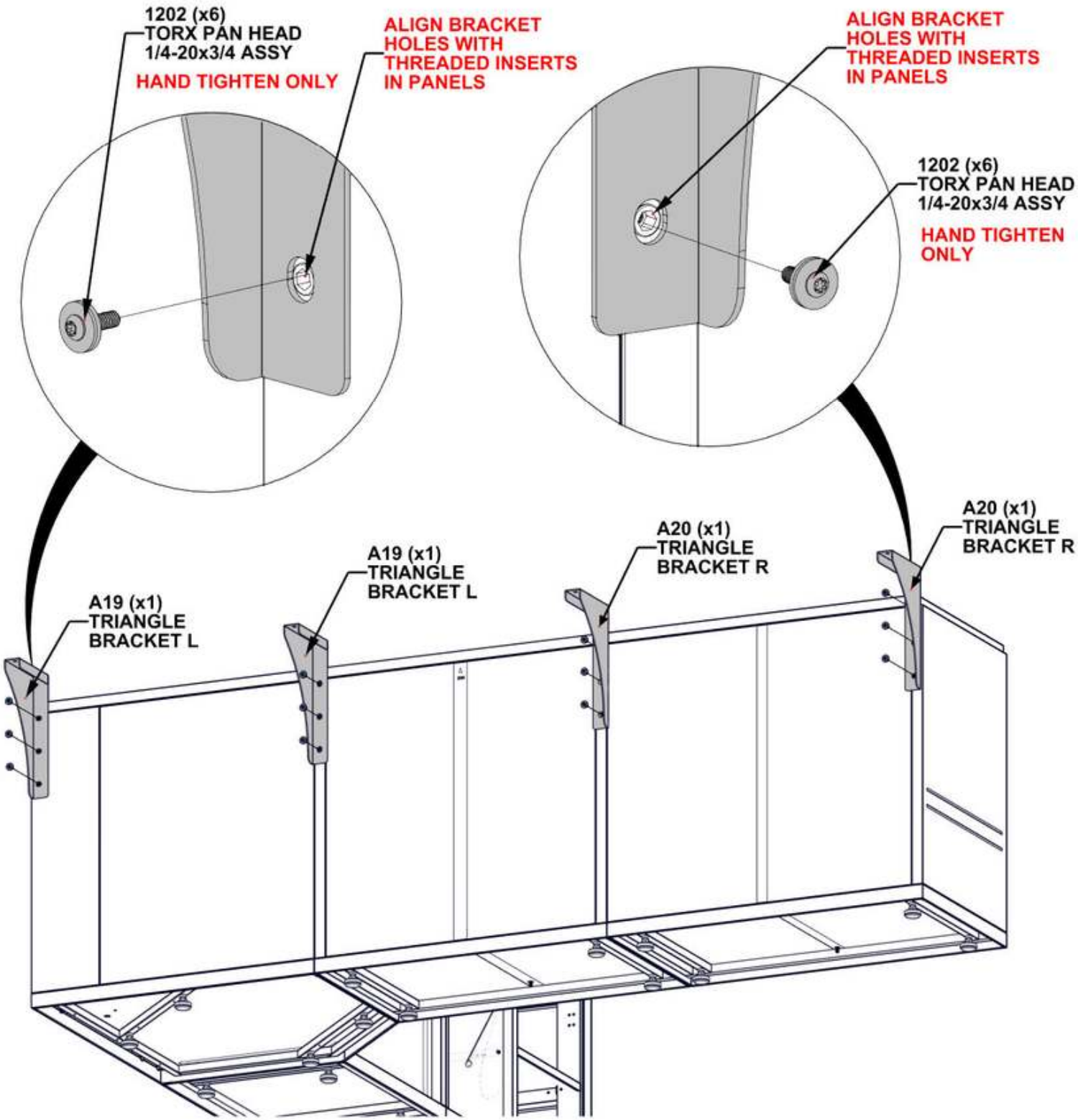

# STEP 47B - BAR TABLE INSTALLATION

| Qty | PartNo | Description |
|---|---|---|
| 8 | H101202 | TORX PAN HEAD 1/4-20x3/4 ASSY |

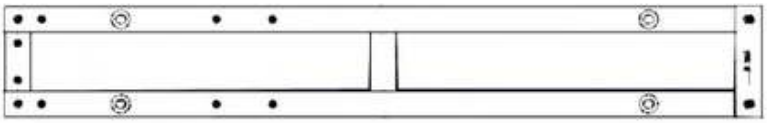

A17 SUPPORT FRAME ASEEMBLY - A4M04723
(x2) 54 1/2"x8 1/4"x1" (25x210x1384.8)

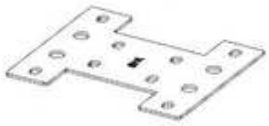

A18 SUPPORT FRAME CONNECTING PIECE - A4M04724
(x1) 1/8"x7 1/16"x8 1/4" (3x180x210)

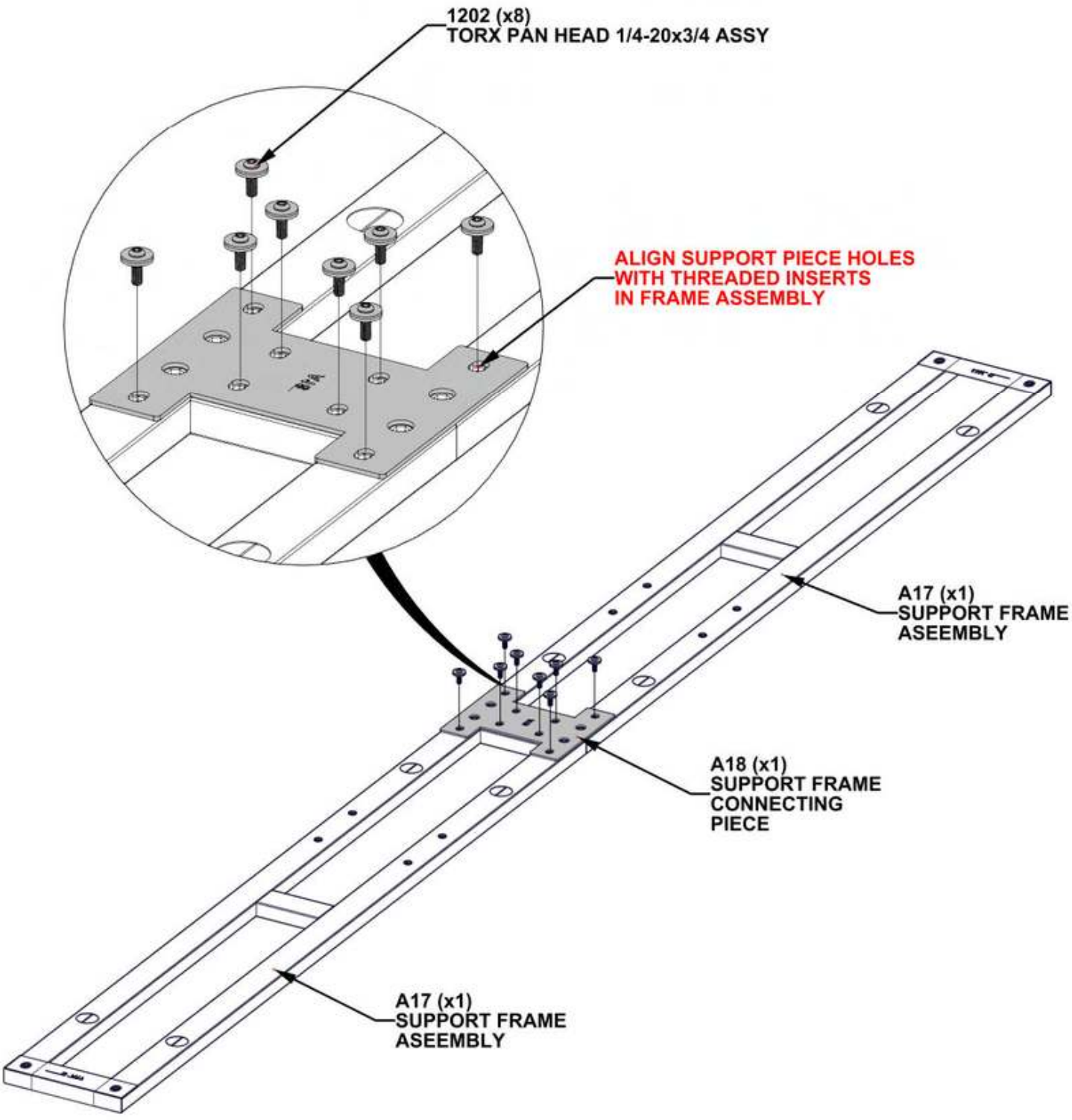

# STEP 47C - BAR TABLE INSTALLATION

| Qty | PartNo | Description |
|---|---|---|
| 8 | H101202 | TORX PAN HEAD 1/4-20x3/4 ASSY |

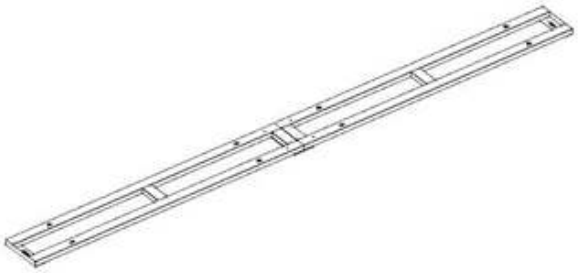

BAR TABLE INSTALLATION FROM STEP 47B

- LEVEL BAR TABLE AS NEEDED BEFORE TIGHTENING HARDWARE.
- TIGHTEN ALL HARDWARE FROM 47A.

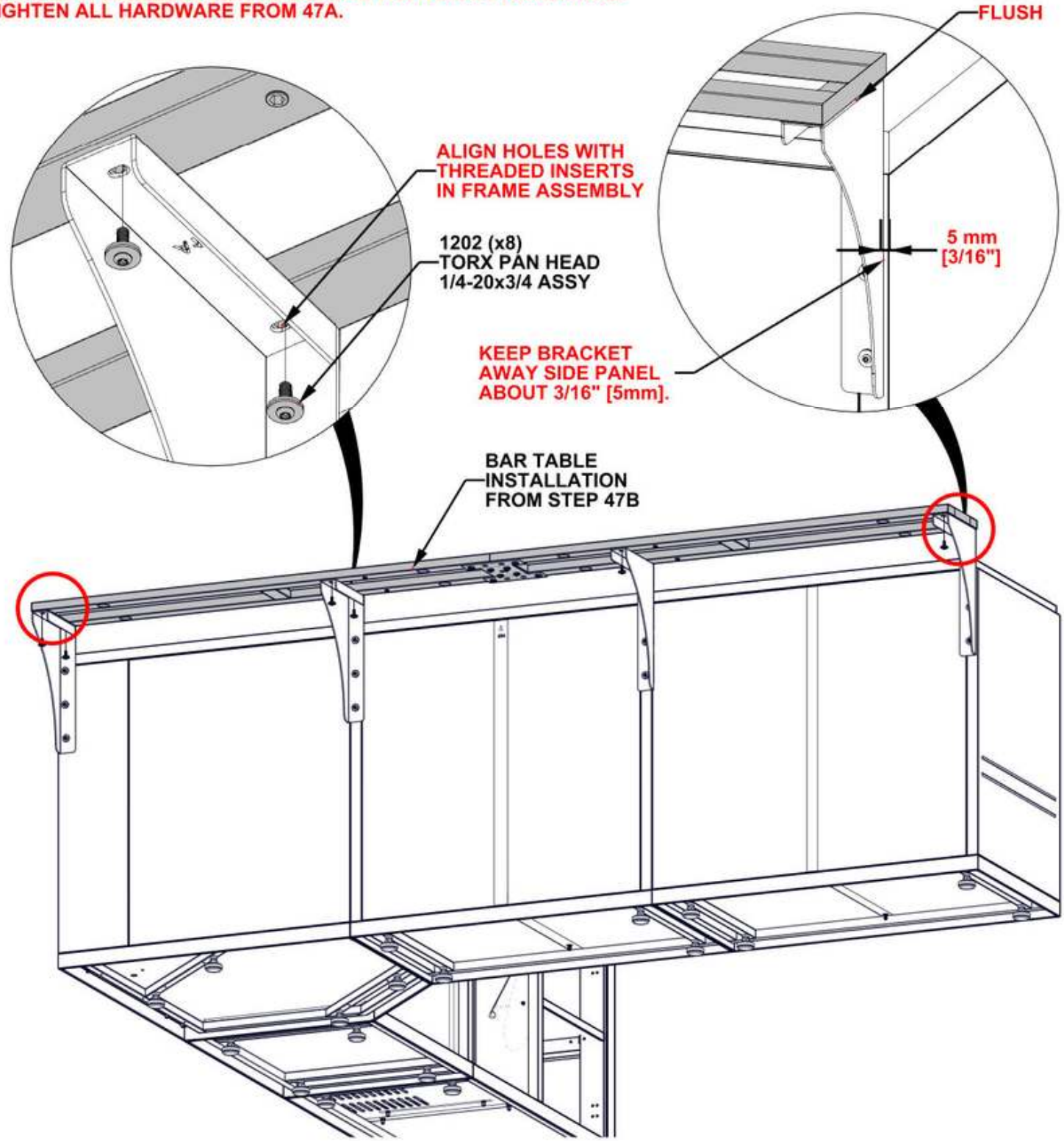

# STEP 48A - BAR TABLE COUNTERTOP INSTALLATION



M15 COUNTERTOP - A4M05958
(x1) 56 11/16"x13 3/4"x11/16" (18x350x1440)



M22 COUNTERTOP - A4M05956
(x1) 56 11/16"x13 3/4"x11/16" (18x350x1440)

- IT IS RECOMMENDED TO HAVE AT LEAST TWO PEOPLE SET COUNTERTOP IN PLACE.
- SLIDE IN PLACE UNTIL HOLES IN COUNTERTOP ALIGN WITH THE HOLES IN SUPPORT FRAME.
- WHEN SETTING COUNTERTOP IN PLACE, MAKE SURE YOUR FINGERS ARE CLEAR AND NOT UNDERNEATH COUNTERTOP.

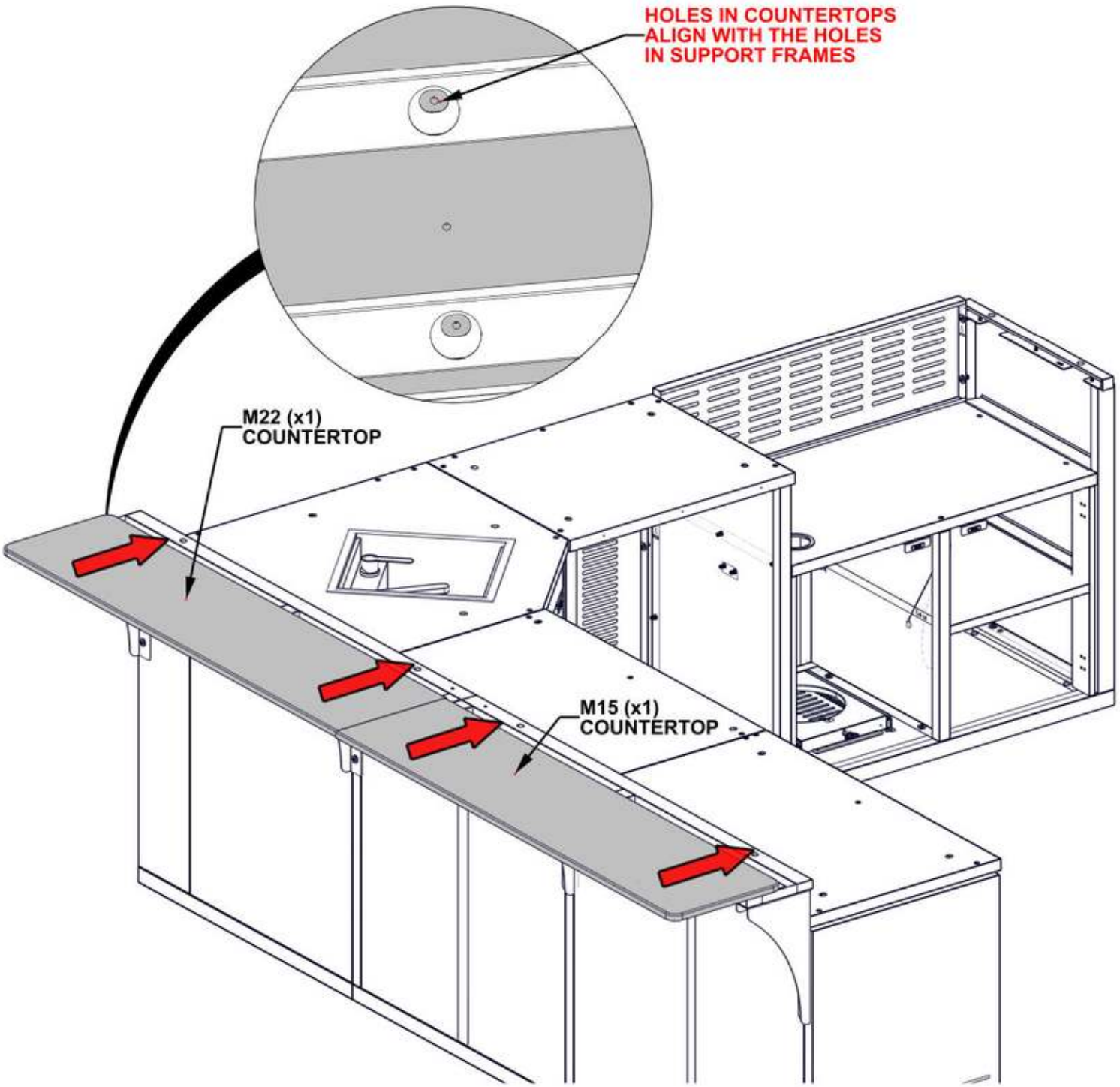

# STEP 48B - BAR TABLE COUNTERTOP ADJUSTMENT (AS NEEDED)

| Qty | PartNo | Description |
|---|---|---|
| 4 | H101404 | TORX SOCKET SCREW 5/16-18x1 1/16" |

- LEVEL COUNTERTOP AS NEEDED BEFORE INSERTING HARDWARE.
- USE TORX SOCKET SCREWS TO FINE TUNE ADJUST THE COUNTERTOP SEAM UNTIL TOP SURFACES ARE FLUSH.

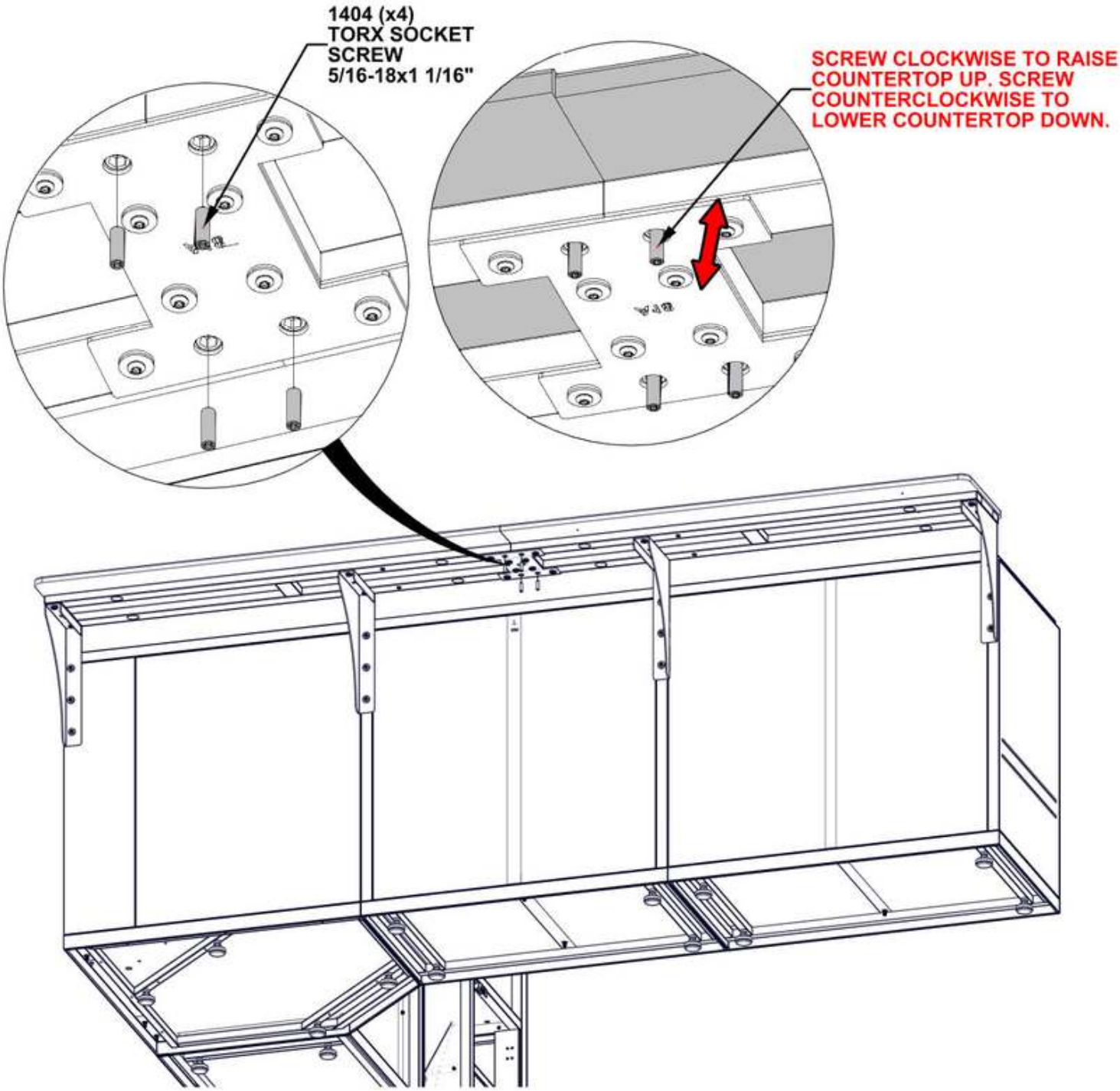

# STEP 48C - BAR TABLE COUNTERTOP INSTALLATION

| Qty | PartNo | Description |
|---|---|---|
| 8 | H101053 | STEEL WASHER 6x20 |
| 8 | H101054 | SEALANT WASHER |
| 8 | H101292 | TORX PAN HEAD 1/4-20x13/32" |

- MAKE SURE YOU ARE USING THE CORRECT HARDWARE FOR THIS STEP.
- ONCE COUNTERTOP IS IN PLACE, IT IS RECOMMENDED TO COVER WITH A PIECE OF CARDBOARD OR FOAM UNTIL ASSEMBLY IS FINISHED TO PREVENT DAMAGE.
- DO NOT USE COUNTERTOP SURFACE AS A WORK BENCH.

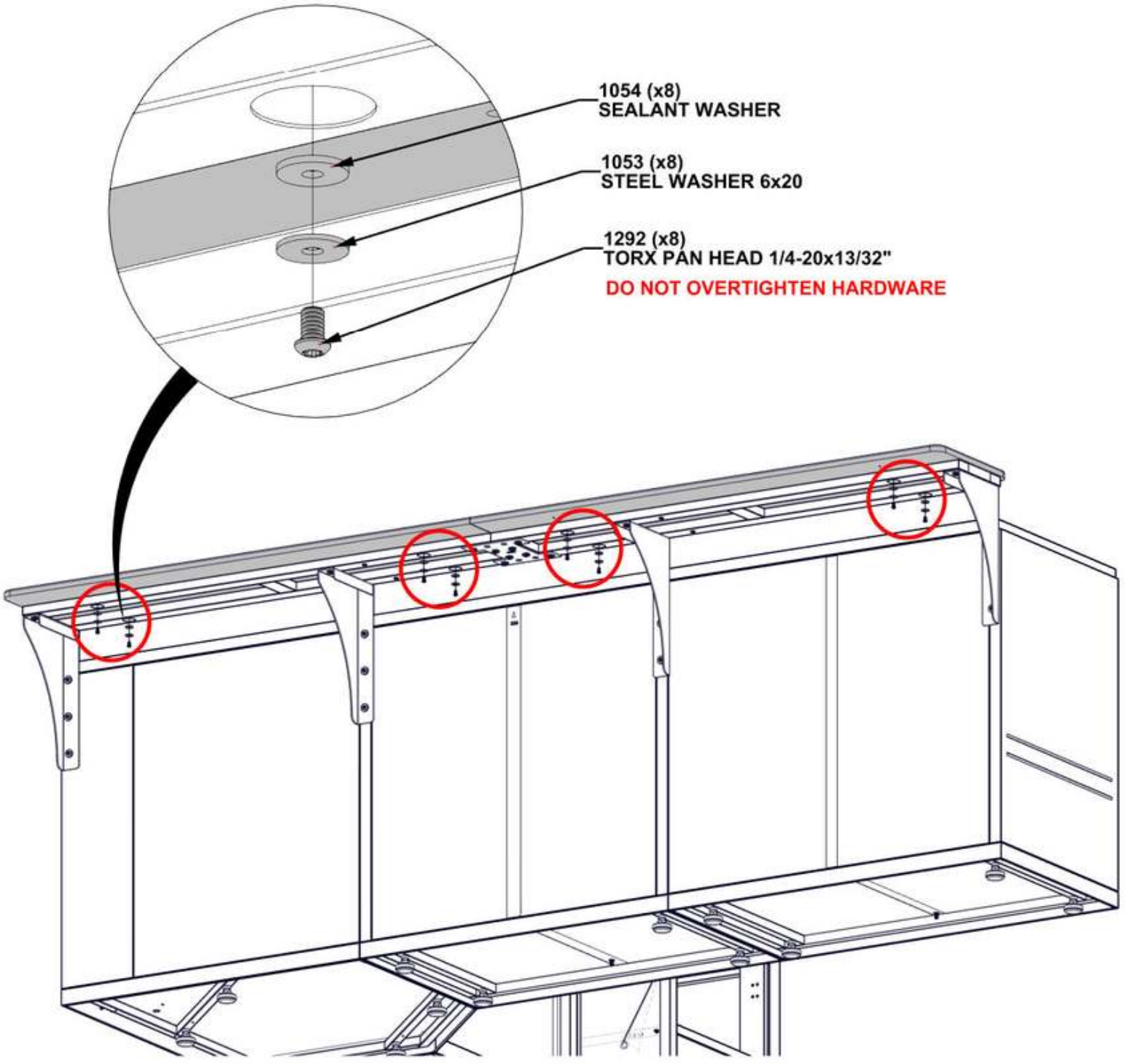

# STEP 49A - CABINET COUNTERTOP INSTALLATION

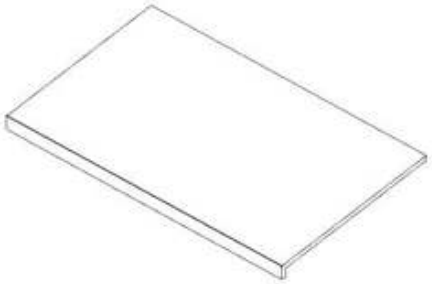

M10 COUNTERTOP - A4M05957
(x1) 40 3/16"x24 15/16"x1 15/16" (50x634x1020)

- IT IS RECOMMENDED TO HAVE AT LEAST TWO PEOPLE SET COUNTERTOP IN PLACE.
- SLIDE IN PLACE UNTIL HOLES IN COUNTERTOP ALIGN WITH THE HOLES IN SUPPORT FRAME.
- WHEN SETTING COUNTERTOP IN PLACE, MAKE SURE YOUR FINGERS ARE CLEAR AND NOT UNDERNEATH COUNTERTOP.

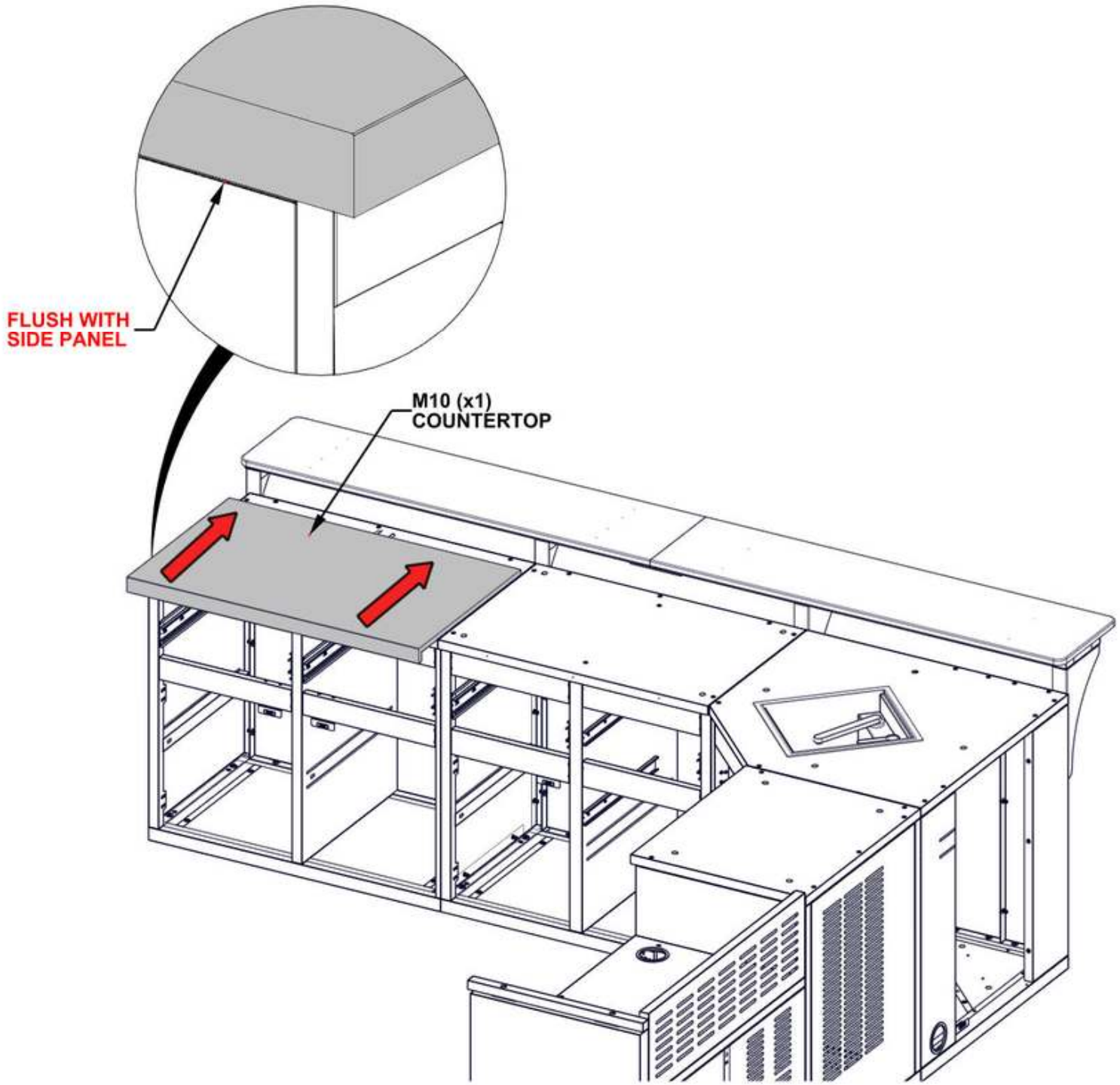

# STEP 49B - CABINET COUNTERTOP INSTALLATION

| Qty | PartNo | Description |
|---|---|---|
| 4 | H101053 | STEEL WASHER 6x20 |
| 4 | H101054 | SEALANT WASHER |
| 4 | H101292 | TORX PAN HEAD 1/4-20x13/32" |

- MAKE SURE YOU ARE USING THE CORRECT HARDWARE FOR THIS STEP.
- ONCE COUNTERTOP IS IN PLACE, IT IS RECOMMENDED TO COVER WITH A PIECE OF CARDBOARD OR FOAM UNTIL ASSEMBLY IS FINISHED TO PREVENT DAMAGE.
- DO NOT USE COUNTERTOP SURFACE AS A WORK BENCH.

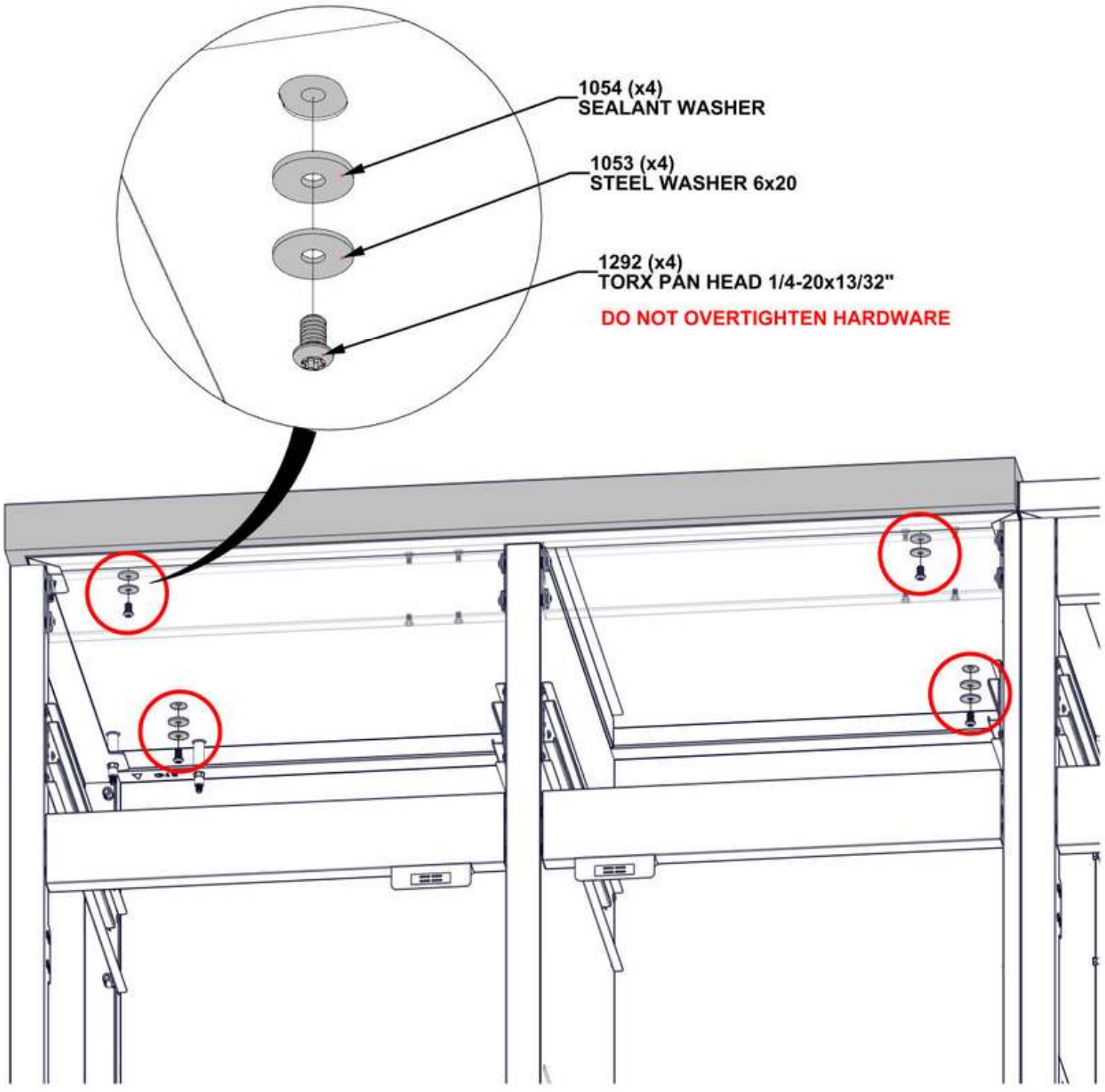

# STEP 50A - CABINET COUNTERTOP INSTALLATION

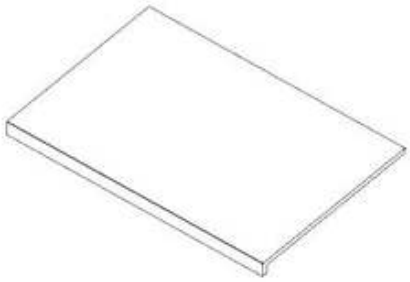

M12 COUNTERTOP - A4M05955
(x1) 37 3/16"x24 15/16"x1 15/16" (50x634x944)

- IT IS RECOMMENDED TO HAVE AT LEAST TWO PEOPLE SET COUNTERTOP IN PLACE.
- SLIDE IN PLACE UNTIL HOLES IN COUNTERTOP ALIGN WITH THE HOLES IN SUPPORT FRAME.
- WHEN SETTING COUNTERTOP IN PLACE, MAKE SURE YOUR FINGERS ARE CLEAR AND NOT UNDERNEATH COUNTERTOP.

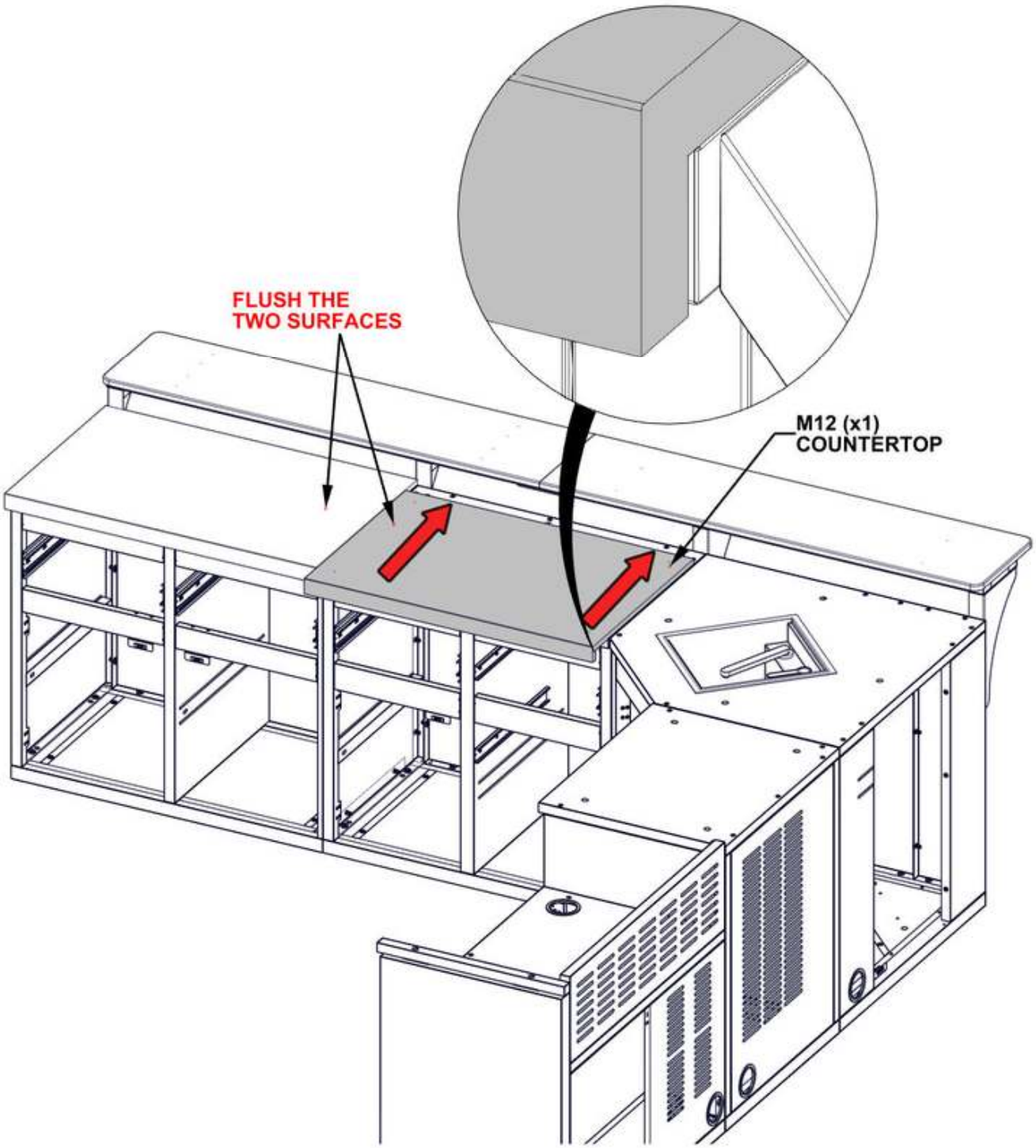

# STEP 50B - CABINET COUNTERTOP INSTALLATION

| Qty | PartNo | Description |
|---|---|---|
| 4 | H101053 | STEEL WASHER 6x20 |
| 4 | H101054 | SEALANT WASHER |
| 4 | H101292 | TORX PAN HEAD 1/4-20x13/32" |

- MAKE SURE YOU ARE USING THE CORRECT HARDWARE FOR THIS STEP.
- ONCE COUNTERTOP IS IN PLACE, IT IS RECOMMENDED TO COVER WITH A PIECE OF CARDBOARD OR FOAM UNTIL ASSEMBLY IS FINISHED TO PREVENT DAMAGE.
- DO NOT USE COUNTERTOP SURFACE AS A WORK BENCH.

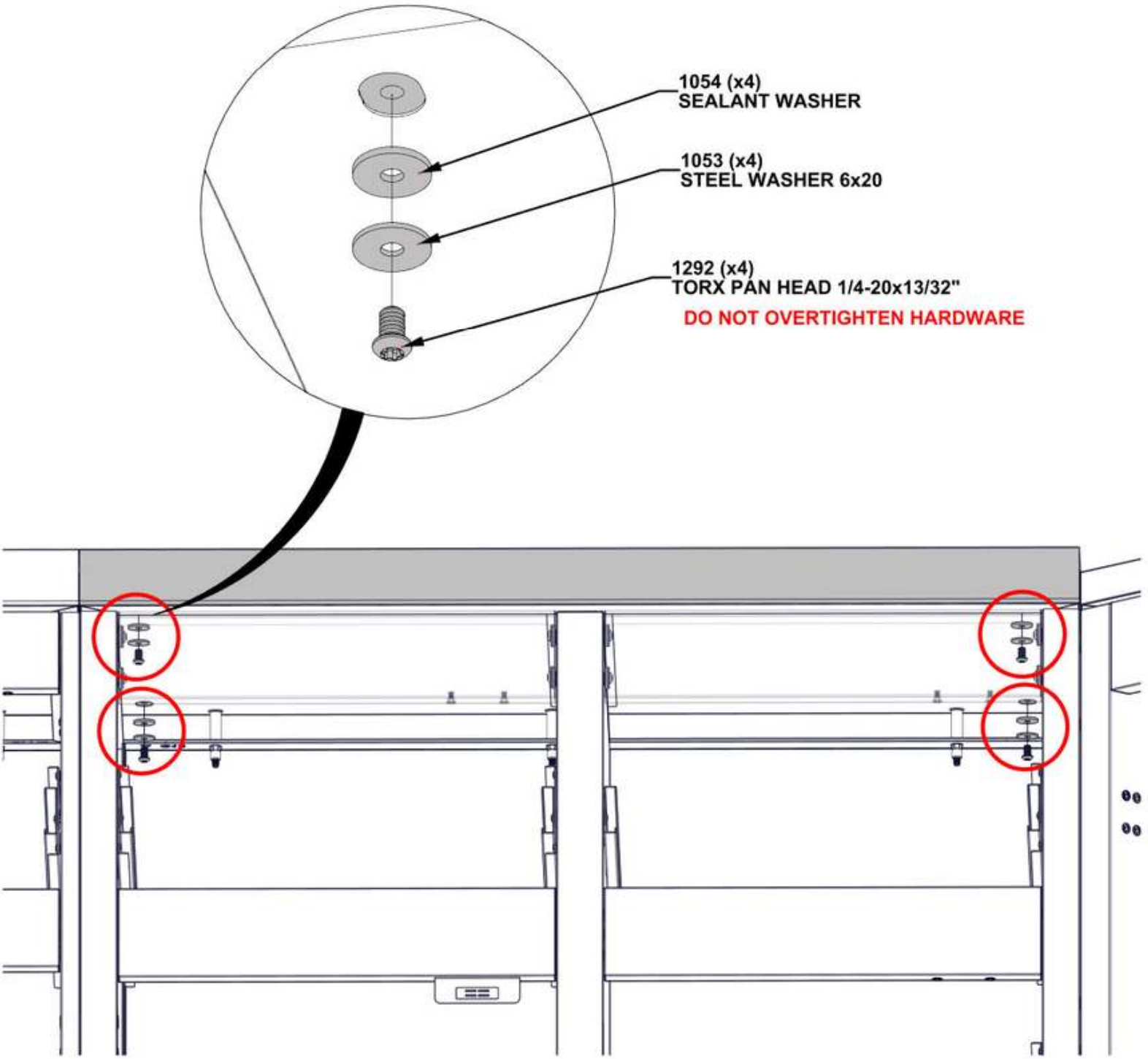

# STEP 51A - SINK CABINET COUNTERTOP INSTALLATION

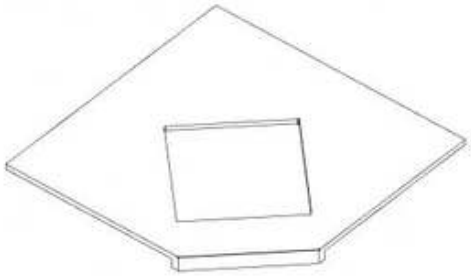

M14 COUNTERTOP - A4M05954
(x1) 36"x36"x1 15/16" (50x914x914)

- IT IS RECOMMENDED TO HAVE AT LEAST TWO PEOPLE SET COUNTERTOP IN PLACE.
- SLIDE IN PLACE UNTIL HOLES IN COUNTERTOP ALIGN WITH THE HOLES IN SUPPORT FRAME.
- WHEN SETTING COUNTERTOP IN PLACE, MAKE SURE YOUR FINGERS ARE CLEAR AND NOT UNDERNEATH COUNTERTOP.

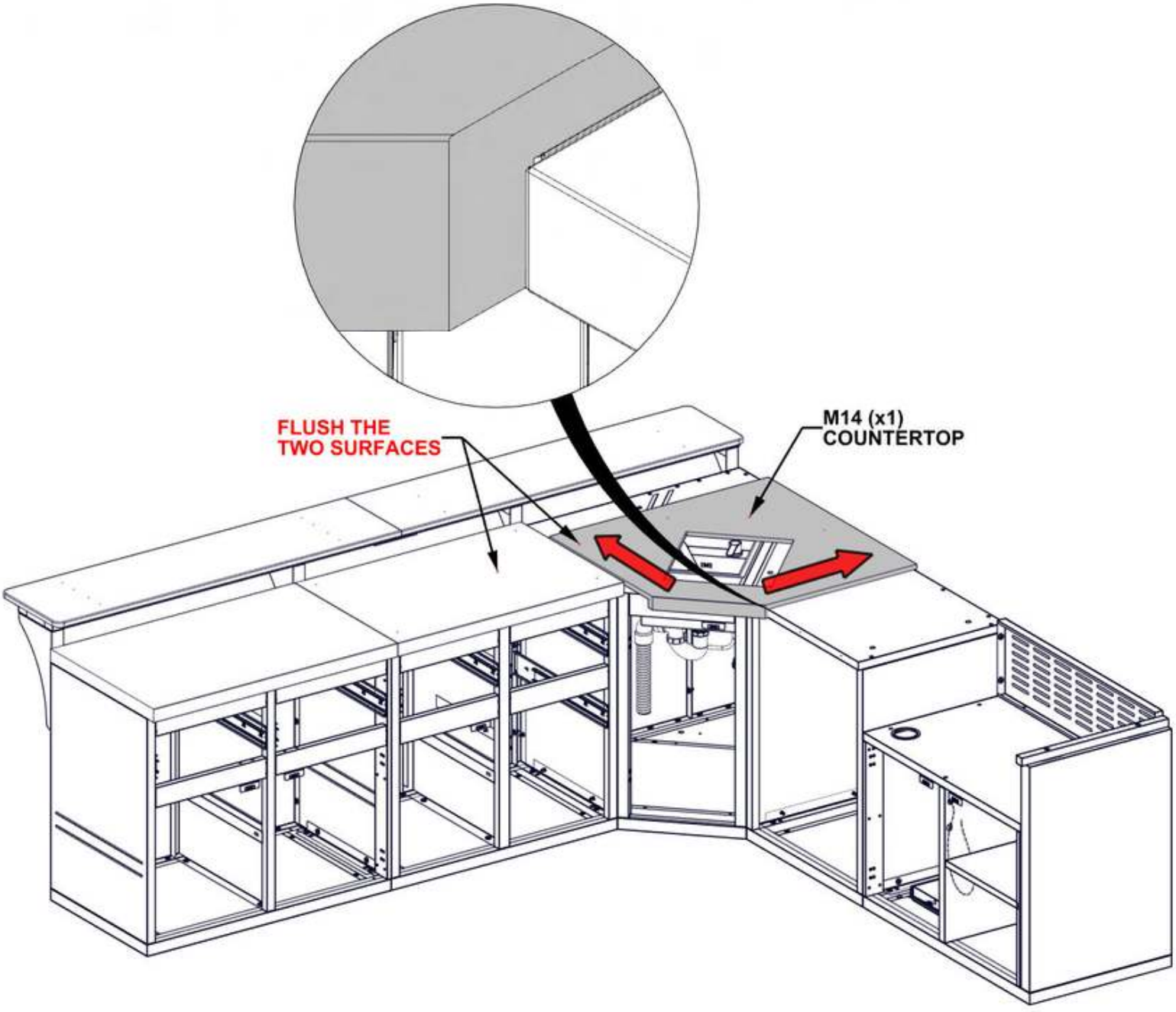

# STEP 51B - SINK CABINET COUNTERTOP INSTALLATION

| Qty | PartNo | Description |
|---|---|---|
| 2 | H101053 | STEEL WASHER 6x20 |
| 2 | H101054 | SEALANT WASHER |
| 2 | H101292 | TORX PAN HEAD 1/4-20x13/32" |

- IT IS RECOMMENDED TO USE THE 6" MAGNETIC DRIVER EXTENSION PROVIDED IN YOUR HARDWARE KIT FOR THIS STEP.
- MAKE SURE YOU ARE USING THE CORRECT HARDWARE FOR THIS STEP.
- ONCE COUNTERTOP IS IN PLACE, IT IS RECOMMENDED TO COVER WITH A PIECE OF CARDBOARD OR FOAM UNTIL ASSEMBLY IS FINISHED TO PREVENT DAMAGE.
- DO NOT USE COUNTERTOP SURFACE AS A WORK BENCH.

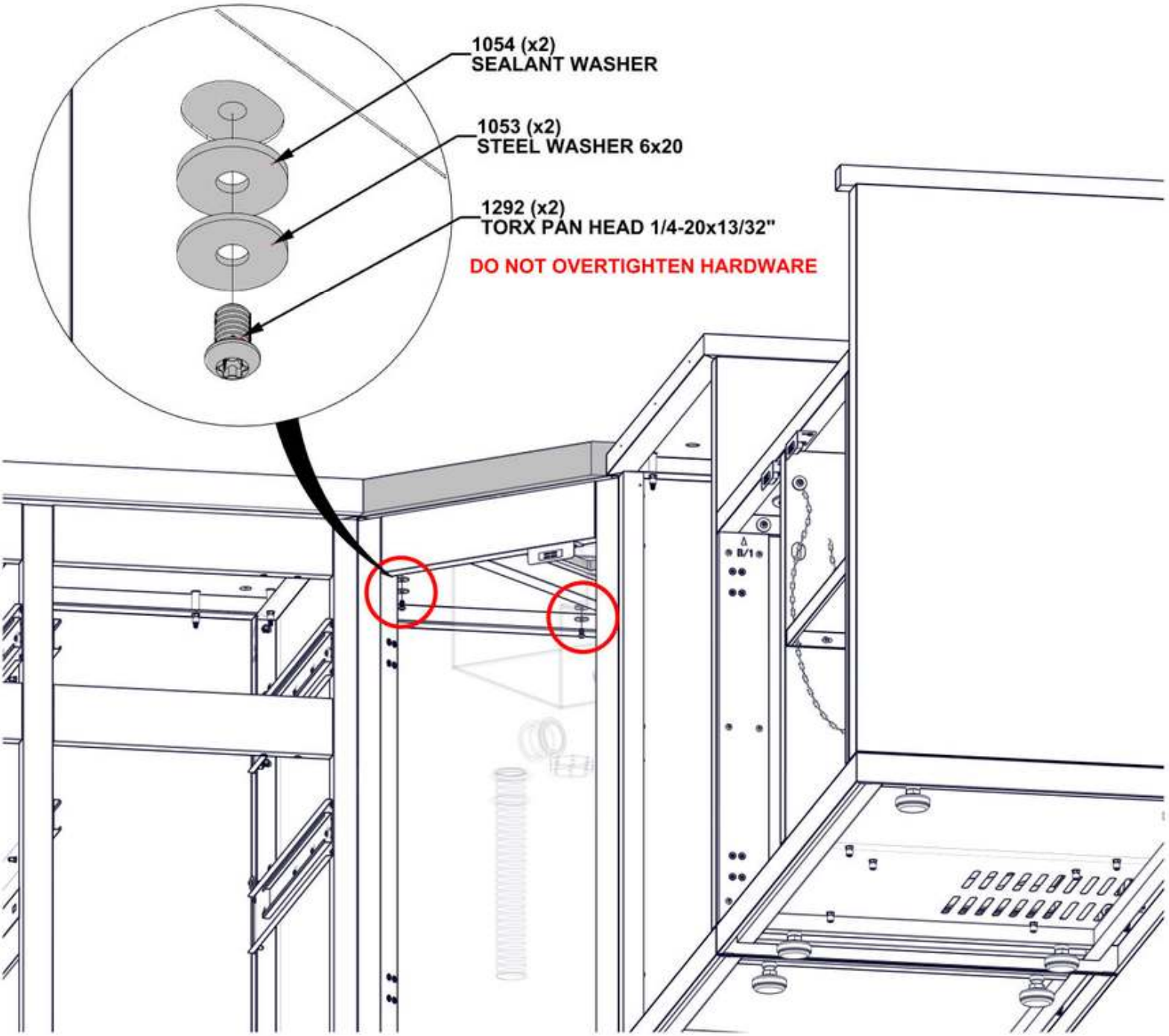

# STEP 51C - SINK CABINET COUNTERTOP INSTALLATION

| Qty | PartNo | Description |
|---|---|---|
| 2 | H101053 | STEEL WASHER 6x20 |
| 2 | H101054 | SEALANT WASHER |
| 2 | H101292 | TORX PAN HEAD 1/4-20x13/32" |

- MAKE SURE YOU ARE USING THE CORRECT HARDWARE FOR THIS STEP.
- ONCE COUNTERTOP IS IN PLACE, IT IS RECOMMENDED TO COVER WITH A PIECE OF CARDBOARD OR FOAM UNTIL ASSEMBLY IS FINISHED TO PREVENT DAMAGE.
- DO NOT USE COUNTERTOP SURFACE AS A WORK BENCH.

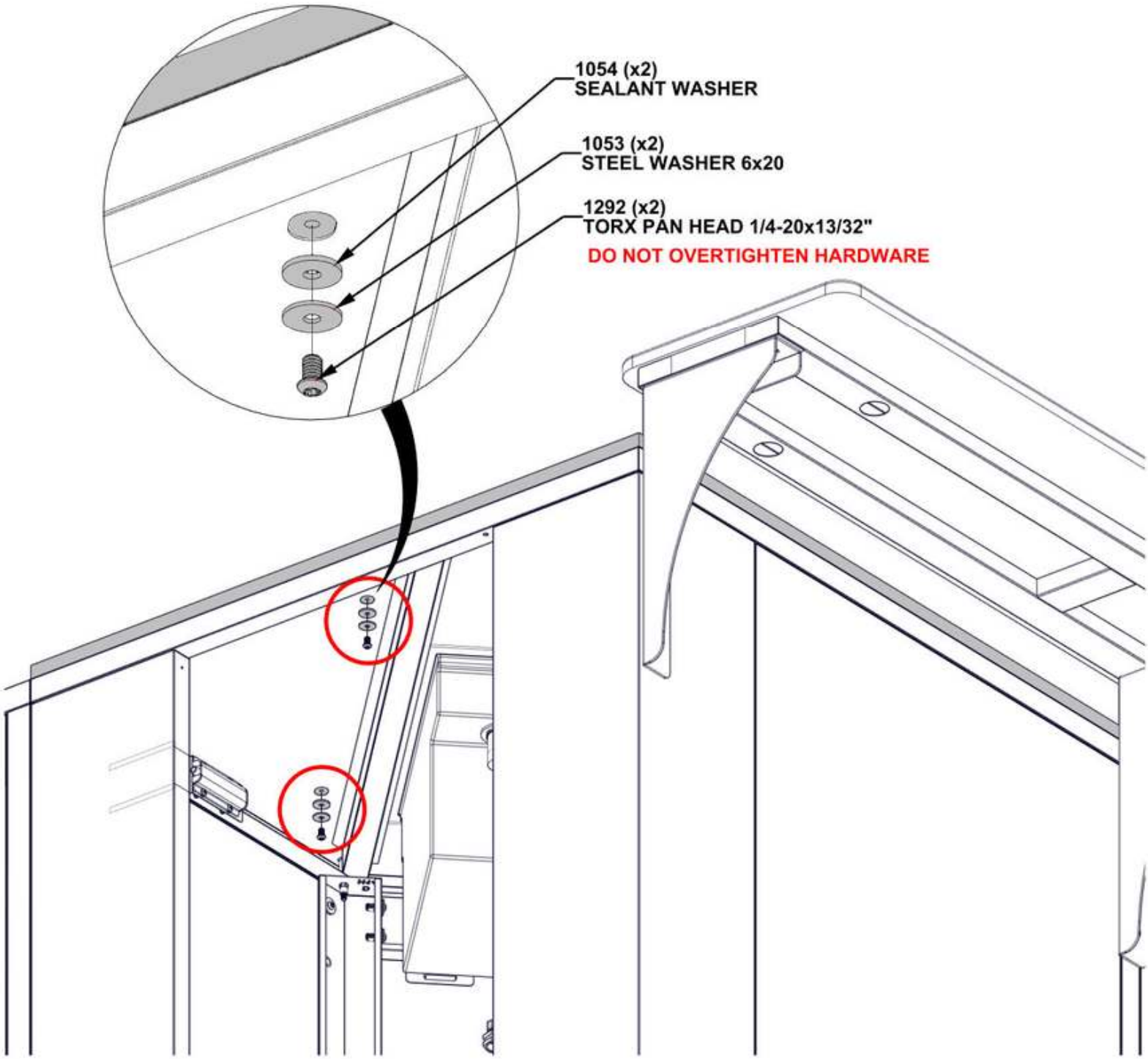

# STEP 52 - SINK CABINET COUNTERTOP INSTALLATION



M5 SINK COVER COUNTERTOP - A4M05949
(x1) 11/16"x14 3/4"x16 5/16" (18x375x415)

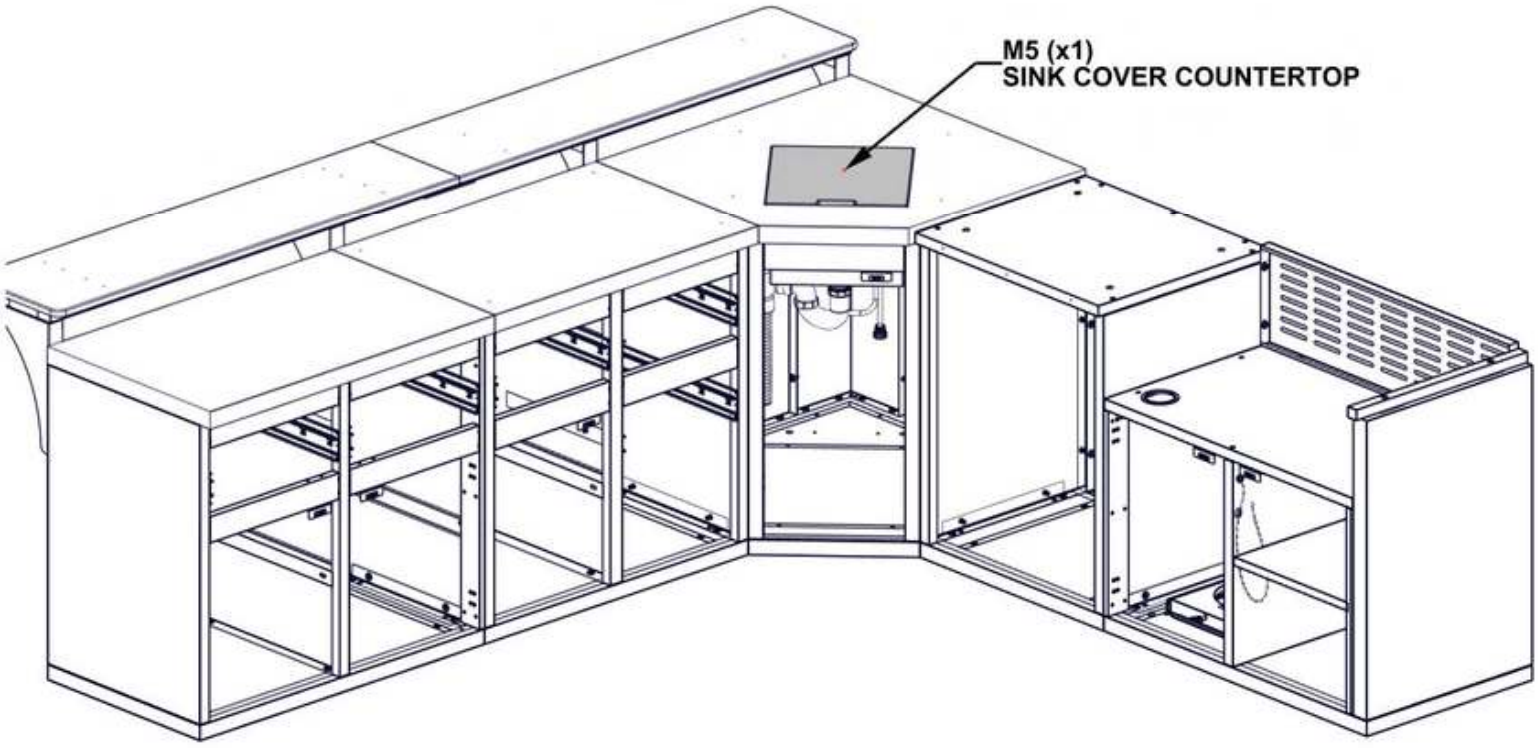

# STEP 53A - FRIDGE CABINET COUNTERTOP INSTALLATION



M13 COUNTERTOP - A4M05953
(x1) 28 1/8"x24 15/16"x1 15/16" (50x634x715)

- IT IS RECOMMENDED TO HAVE AT LEAST TWO PEOPLE SET COUNTERTOP IN PLACE.
- SLIDE IN PLACE UNTIL HOLES IN COUNTERTOP ALIGN WITH THE HOLES IN SUPPORT FRAME.
- WHEN SETTING COUNTERTOP IN PLACE, MAKE SURE YOUR FINGERS ARE CLEAR AND NOT UNDERNEATH COUNTERTOP.

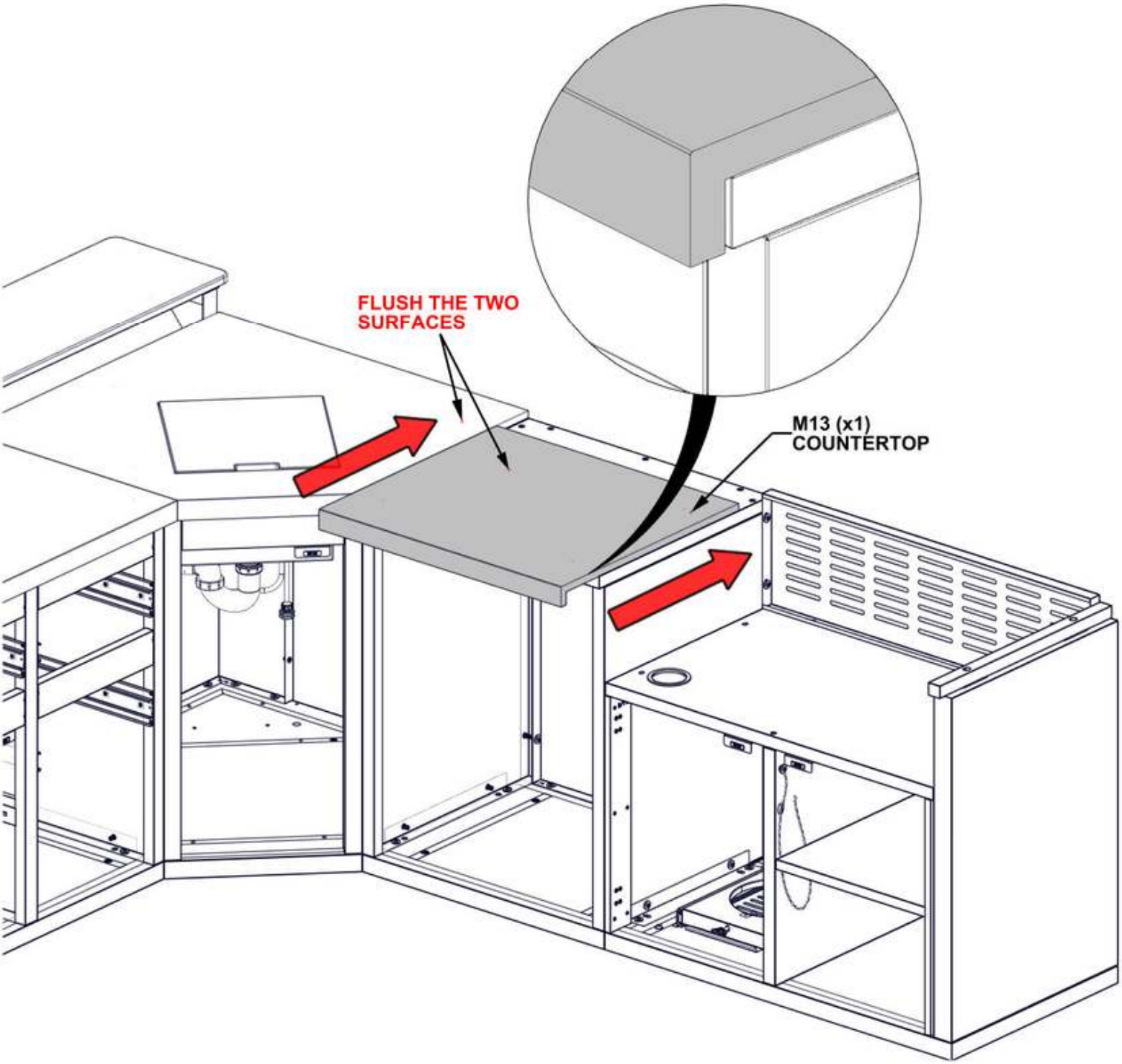

# STEP 53B - FRIDGE CABINET COUNTERTOP INSTALLATION

| Qty | PartNo | Description |
|---|---|---|
| 4 | H101053 | STEEL WASHER 6x20 |
| 4 | H101054 | SEALANT WASHER |
| 4 | H101292 | TORX PAN HEAD 1/4-20x13/32" |

- MAKE SURE YOU ARE USING THE CORRECT HARDWARE FOR THIS STEP.
- ONCE COUNTERTOP IS IN PLACE, IT IS RECOMMENDED TO COVER WITH A PIECE OF CARDBOARD OR FOAM UNTIL ASSEMBLY IS FINISHED TO PREVENT DAMAGE.
- DO NOT USE COUNTERTOP SURFACE AS A WORK BENCH.

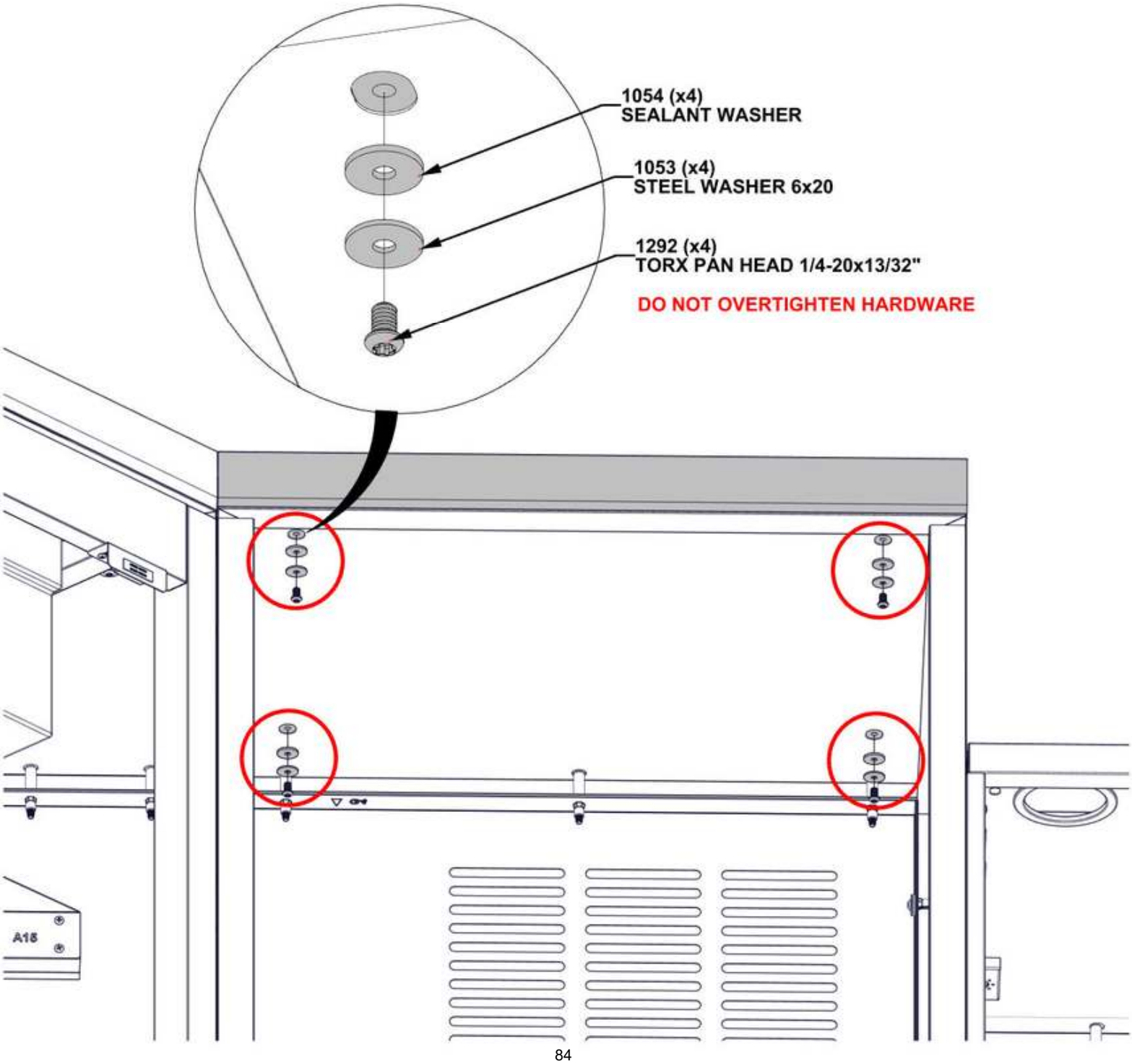

# STEP 54A - CABINET COUNTERTOP INSTALLATION



M11 COUNTERTOP - A4M05952
(x1) 24 15/16"x2 1/16"x11/16" (18x53x634)

- IT IS RECOMMENDED TO HAVE AT LEAST TWO PEOPLE SET COUNTERTOP IN PLACE.
- SLIDE IN PLACE UNTIL HOLES IN COUNTERTOP ALIGN WITH THE HOLES IN SUPPORT FRAME.
- WHEN SETTING COUNTERTOP IN PLACE, MAKE SURE YOUR FINGERS ARE CLEAR AND NOT UNDERNEATH COUNTERTOP.

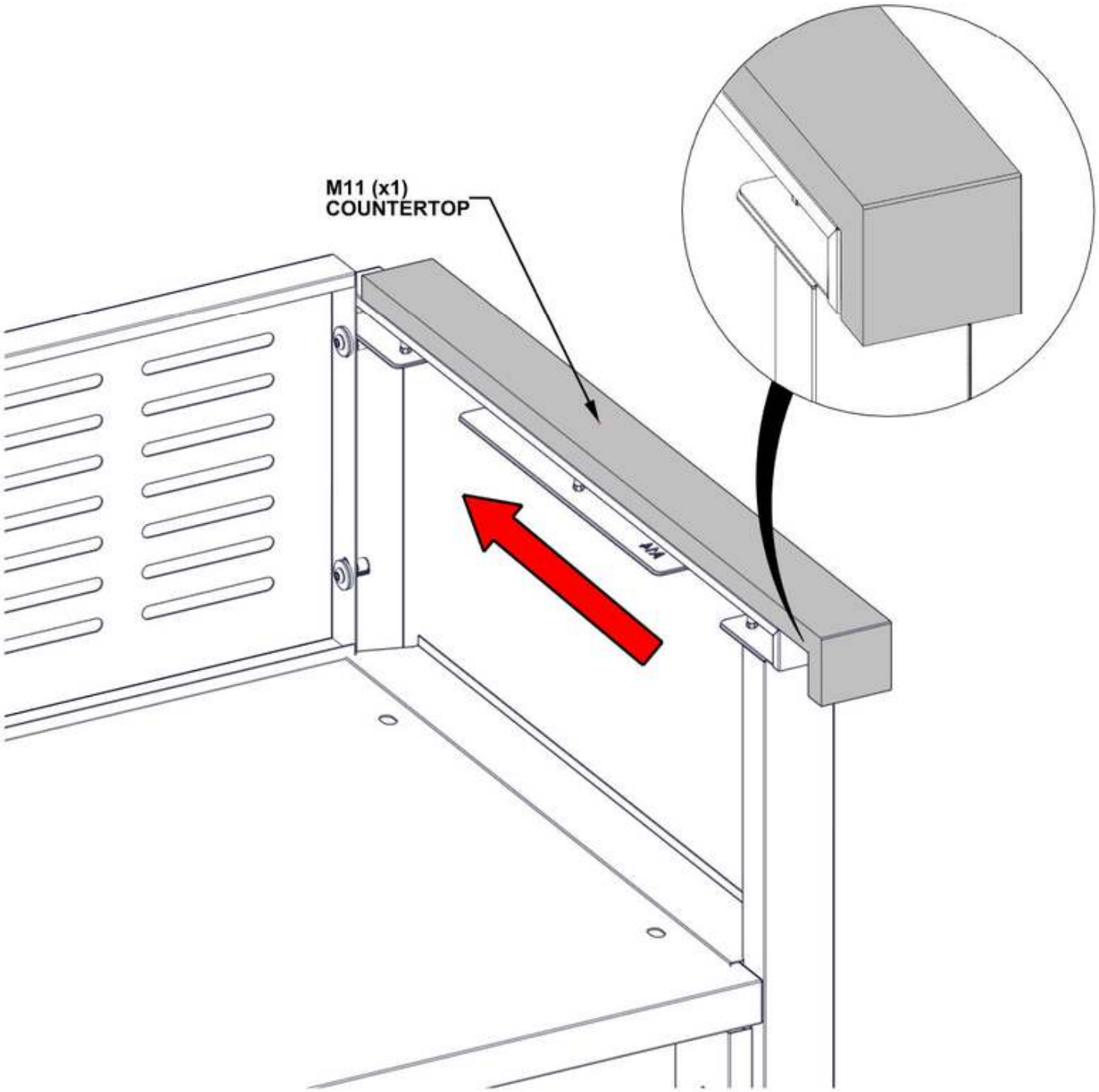

# STEP 54B - CABINET COUNTERTOP INSTALLATION

| Qty | PartNo | Description |
|---|---|---|
| 2 | H101053 | STEEL WASHER 6x20 |
| 2 | H101054 | SEALANT WASHER |
| 2 | H101292 | TORX PAN HEAD 1/4-20x13/32" |

- MAKE SURE YOU ARE USING THE CORRECT HARDWARE FOR THIS STEP.
- ONCE COUNTERTOP IS IN PLACE, IT IS RECOMMENDED TO COVER WITH A PIECE OF CARDBOARD OR FOAM UNTIL ASSEMBLY IS FINISHED TO PREVENT DAMAGE.
- DO NOT USE COUNTERTOP SURFACE AS A WORK BENCH.

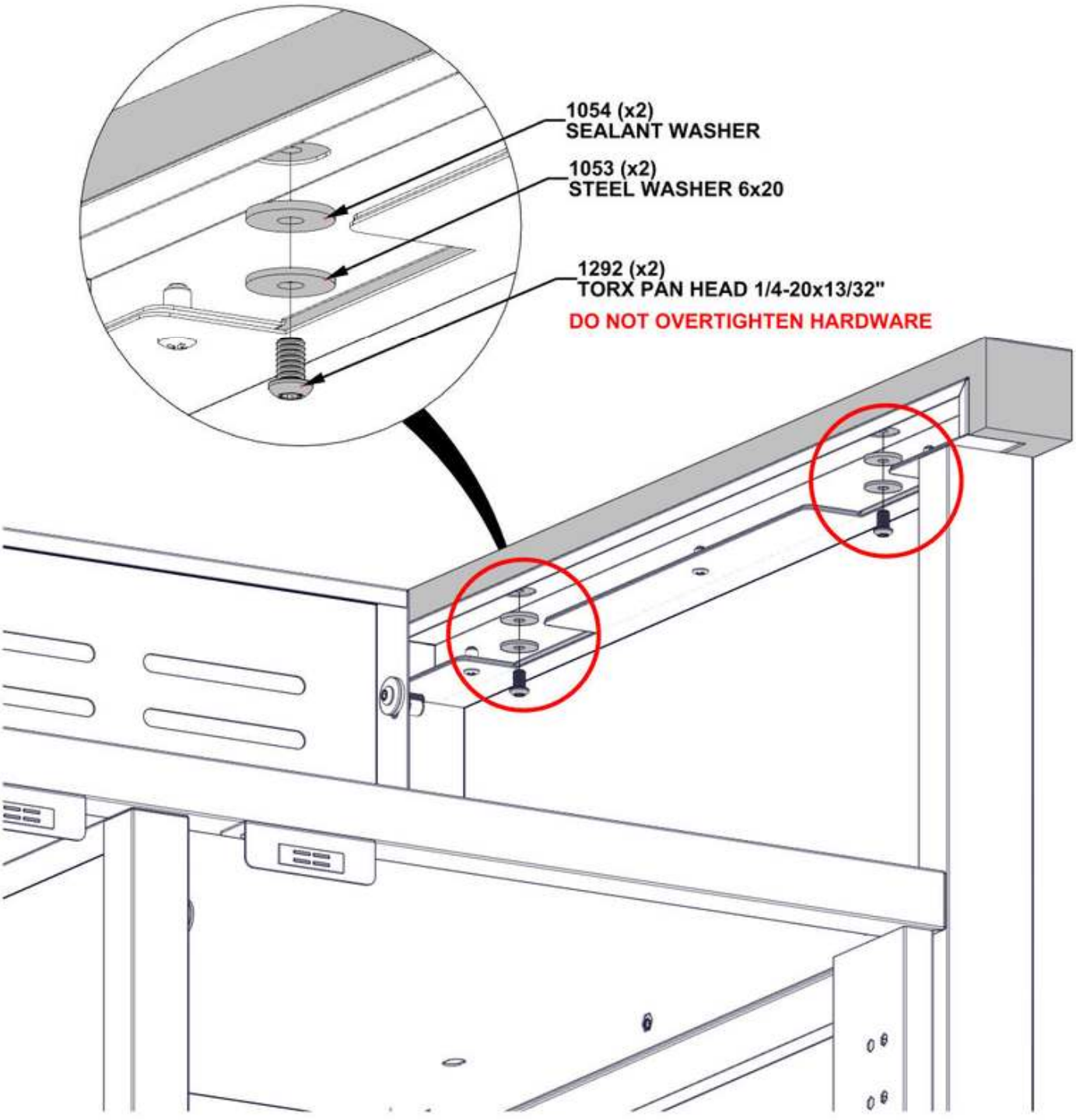

# STEP 55 - SINK CABINET DOOR INSTALLATION



D17 CABINET DOOR ASSEMBLY - A4M03682
(x1) 33 7/8"x18 1/4"x15/16" (23x463x860)

- INSERT HINGE PIN ON BOTTOM DOOR INTO THE HOLE ON FLOOR PANEL.
- PRESS DOWN HINGE PIN ON TOP DOOR INTO THE HOLE ON TOPTABLE ASSEMBLY.

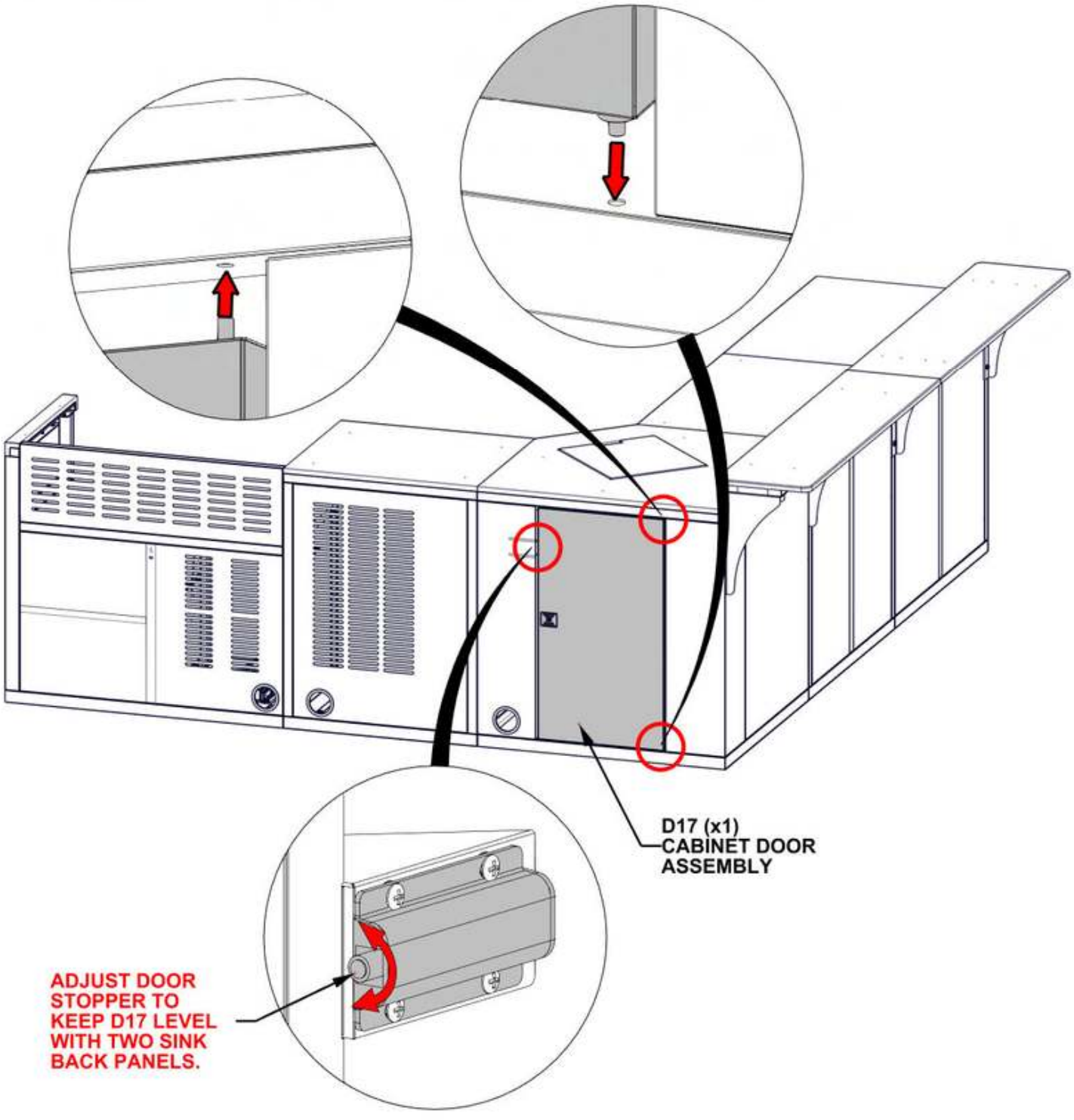

# STEP 56A - TRASH CAN ASSEMBLY

| Qty | PartNo | Description |
|---|---|---|
| 6 | H101289 | PAN HEAD SCREW 8-32x1/2" SS |

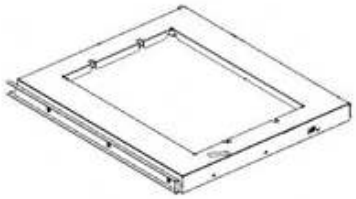



**H3 TRASH CAN BRACKET ASSEMBLY - A4M03610**
**(x1) 18 1/16"x15 13/16"x1 3/8" (35x401x458)**

**A11 TRIANGLE PANEL - A4M03086**
**(x2) 13/16"x13 3/4"x13 3/4" (20x350x350)**

**- IT IS RECOMMENDED TO USE THE 6" MAGNETIC DRIVER EXTENSION PROVIDED IN YOUR HARDWARE KIT FOR THIS STEP.**

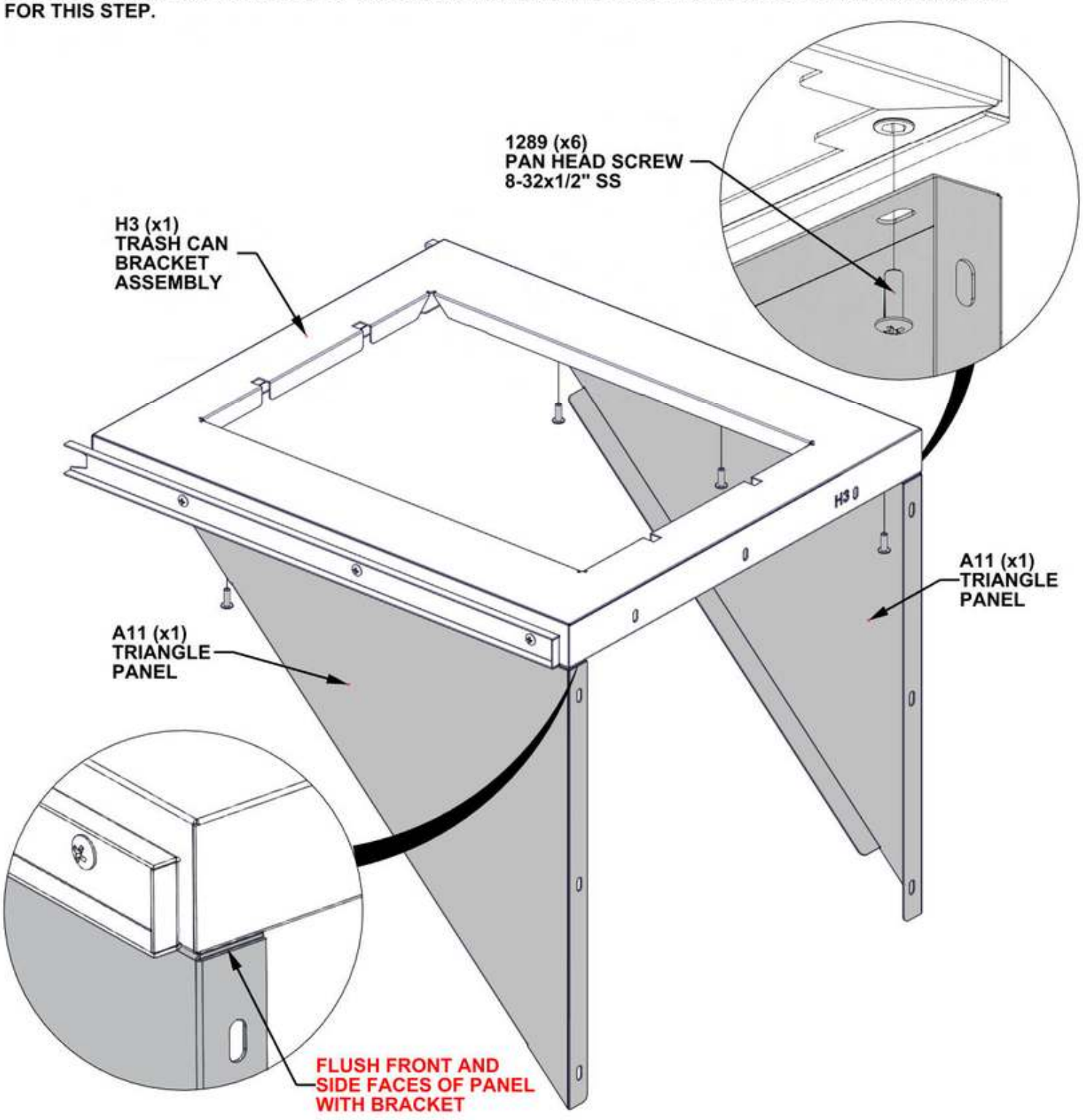

# STEP 56B - TRASH CAN ASSEMBLY

| Qty | PartNo | Description |
|---|---|---|
| 9 | H101289 | PAN HEAD SCREW 8-32x1/2" SS |

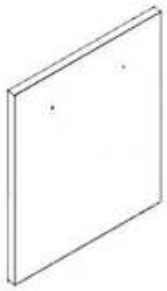

D9 TRASH CAN PANEL ASSEMBLY - A4M03608
(x1) 22 1/4"x17 3/4"x15/16" (24x451x565)

- IT IS RECOMMENDED TO USE THE 6" MAGNETIC DRIVER EXTENSION PROVIDED IN YOUR HARDWARE KIT FOR THIS STEP.

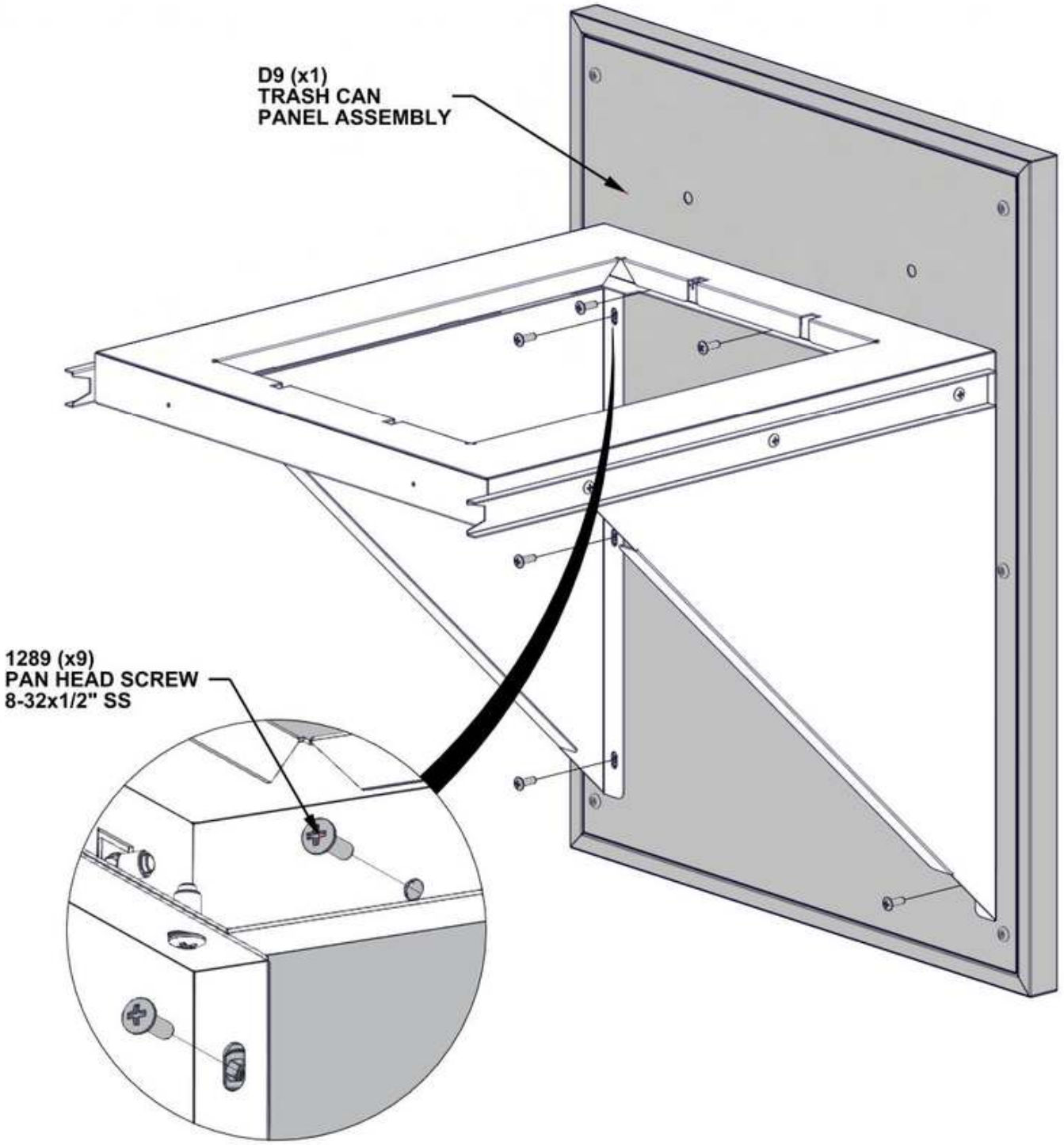

# STEP 56C - TRASH CAN ASSEMBLY

| Qty | PartNo | Description |
|---|---|---|
| 2 | H101307 | SHOULDER BOLT 8-32x30mm SS |

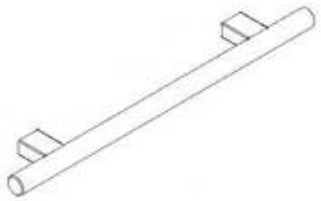

**H2 STAINLESS STEEL HANDLE - A4M03024**
**(x1) 5/8"x1 9/16"x11 13/16" (16x40x300)**

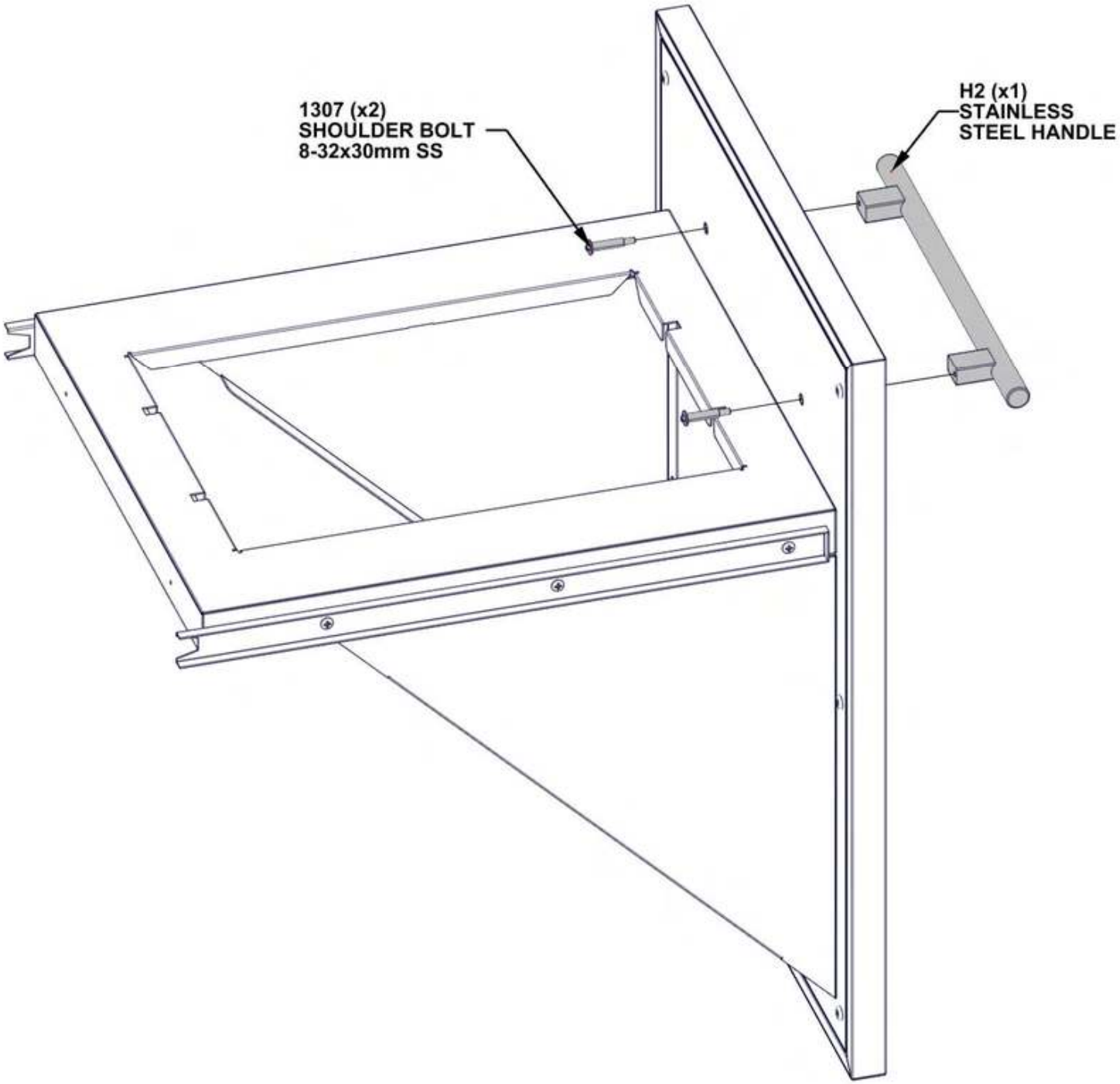

# STEP 57 - TRASH CAN INSTALLATION



TRASH CAN ASSEMBLY STEPS FROM 56A -56C

- ATTACH TRASH CAN ASSEMBLY BY ALIGNING BOTH ENDS OF FACTORY ASSEMBLED DRAWER SLIDES WITH ONE ANOTHER.
- PRESS TOGETHER UNTIL DRAWER SLIDES CONNECT.

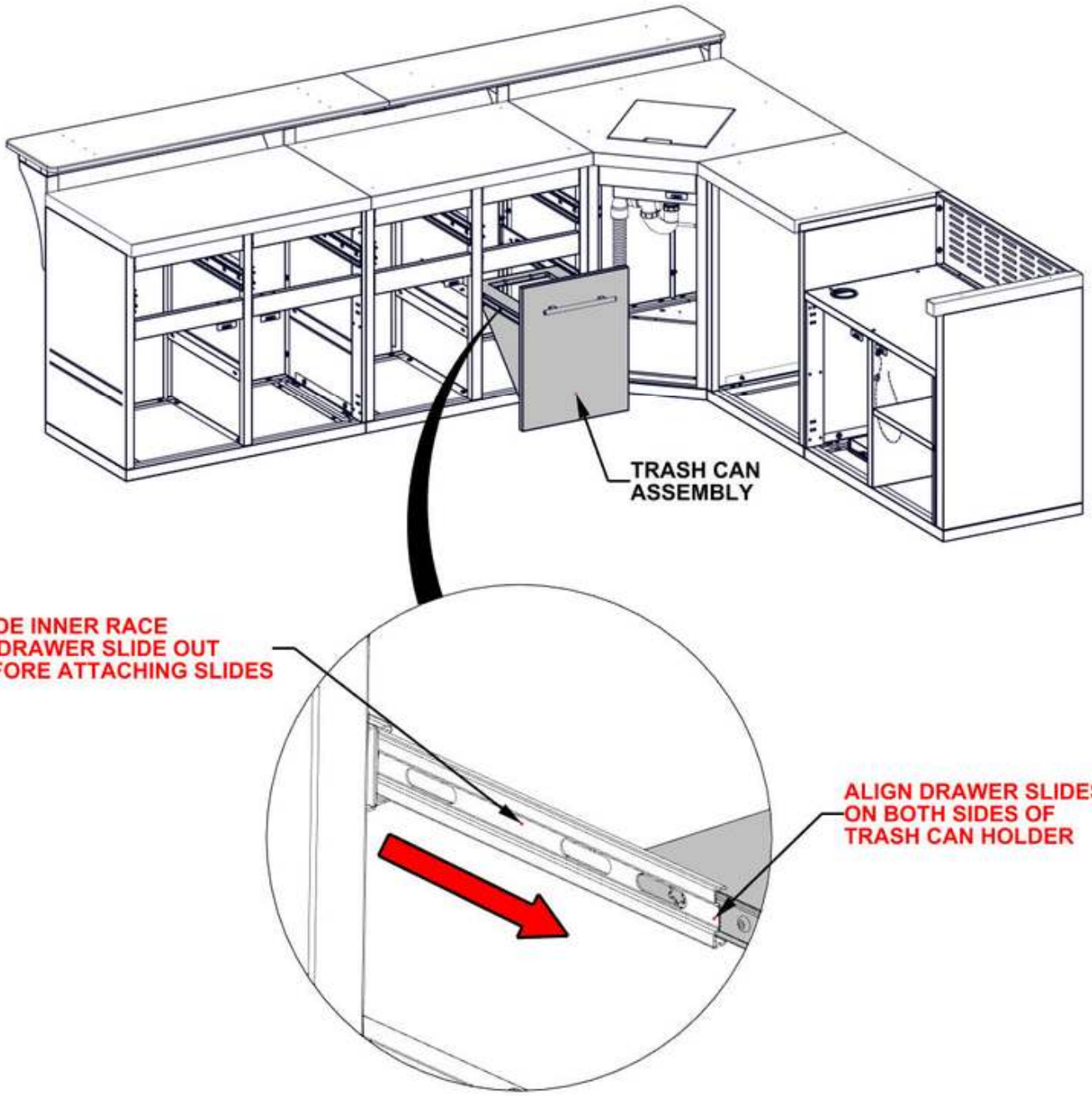

# STEP 58A - DRAWER ASSEMBLY

| Qty | PartNo | Description |
|---|---|---|
| 9 | H101289 | PAN HEAD SCREW 8-32x1/2" SS |

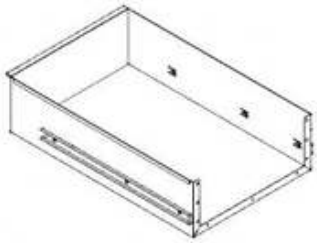

D19 DRAWER BODY ASSEMBLY - A4M03698
(x1) 22 1/4"x17 3/4"x5 3/4" (145x450x565)

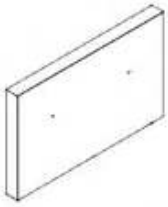

D18 DRAWER PANEL ASSEMBLY L - A4M03696
(x1) 19 9/16"x10 1/4"x15/16" (24x260x498)

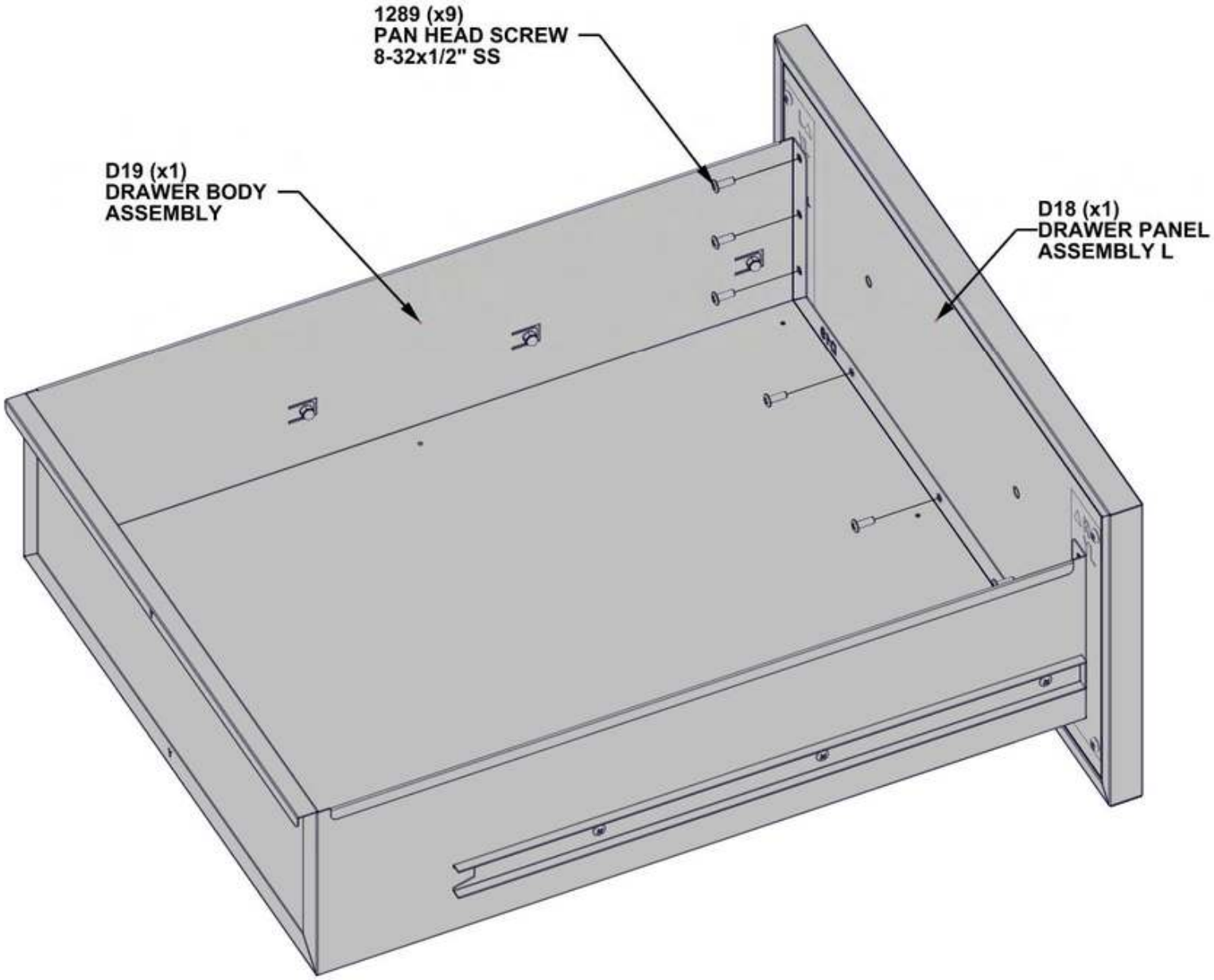

# STEP 58B - DRAWER ASSEMBLY

| Qty | PartNo | Description |
|---|---|---|
| 2 | H101307 | SHOULDER BOLT 8-32x30mm SS |

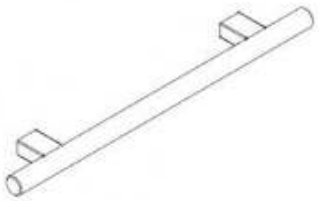

H2 STAINLESS STEEL HANDLE - A4M03024
(x1) 5/8"x1 9/16"x11 13/16" (16x40x300)

- INSTALL DRAWER HANDLE TO DRAWER.

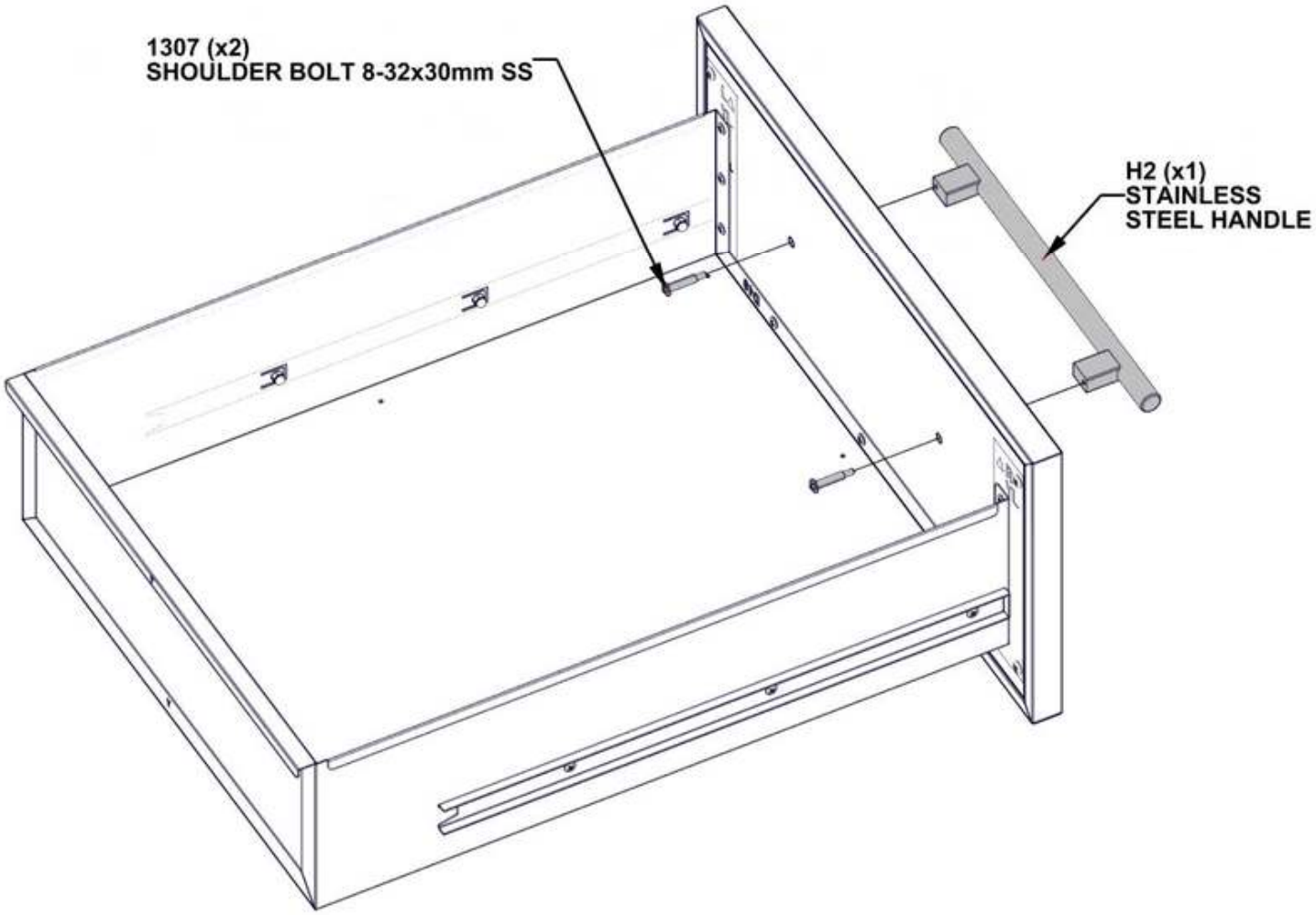

# STEP 59A - DRAWER ASSEMBLY

| Qty | PartNo | Description |
|---|---|---|
| 9 | H101289 | PAN HEAD SCREW 8-32x1/2" SS |

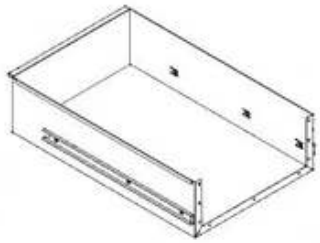

D19 DRAWER BODY ASSEMBLY - A4M03698
(x1) 22 1/4"x17 3/4"x5 3/4" (145x450x565)

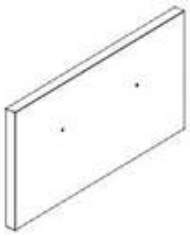

D22 DRAWER PANEL ASSEMBLY R - A4M03706
(x1) 19 9/16"x10 1/4"x15/16" (24x260x498)

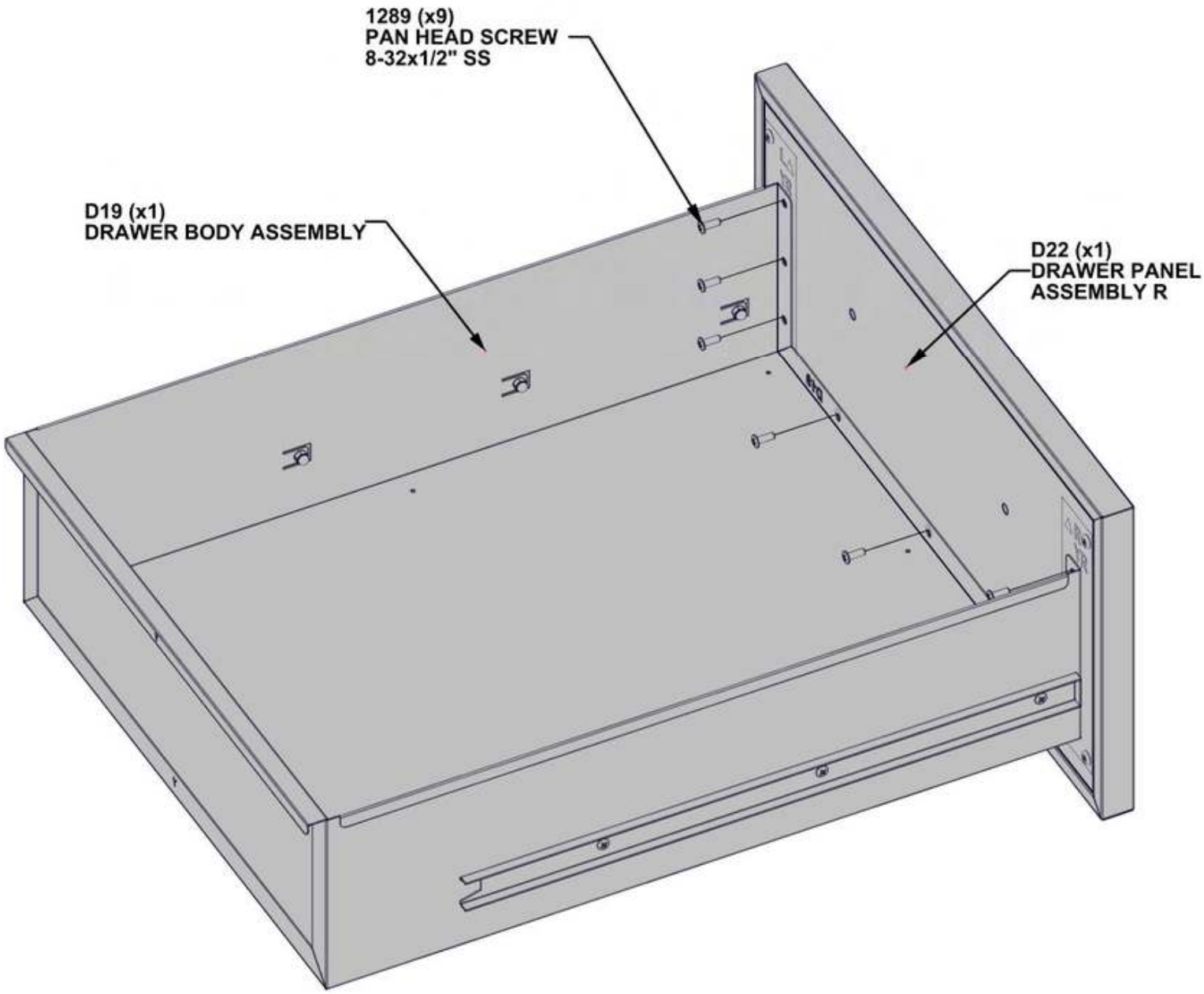

# STEP 59B - DRAWER ASSEMBLY

| Qty | PartNo | Description |
|---|---|---|
| 2 | H101307 | SHOULDER BOLT 8-32x30mm SS |

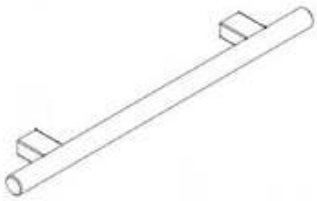

**H2 STAINLESS STEEL HANDLE - A4M03024**
**(x1) 5/8"x1 9/16"x11 13/16" (16x40x300)**

**- INSTALL DRAWER HANDLE TO DRAWER.**

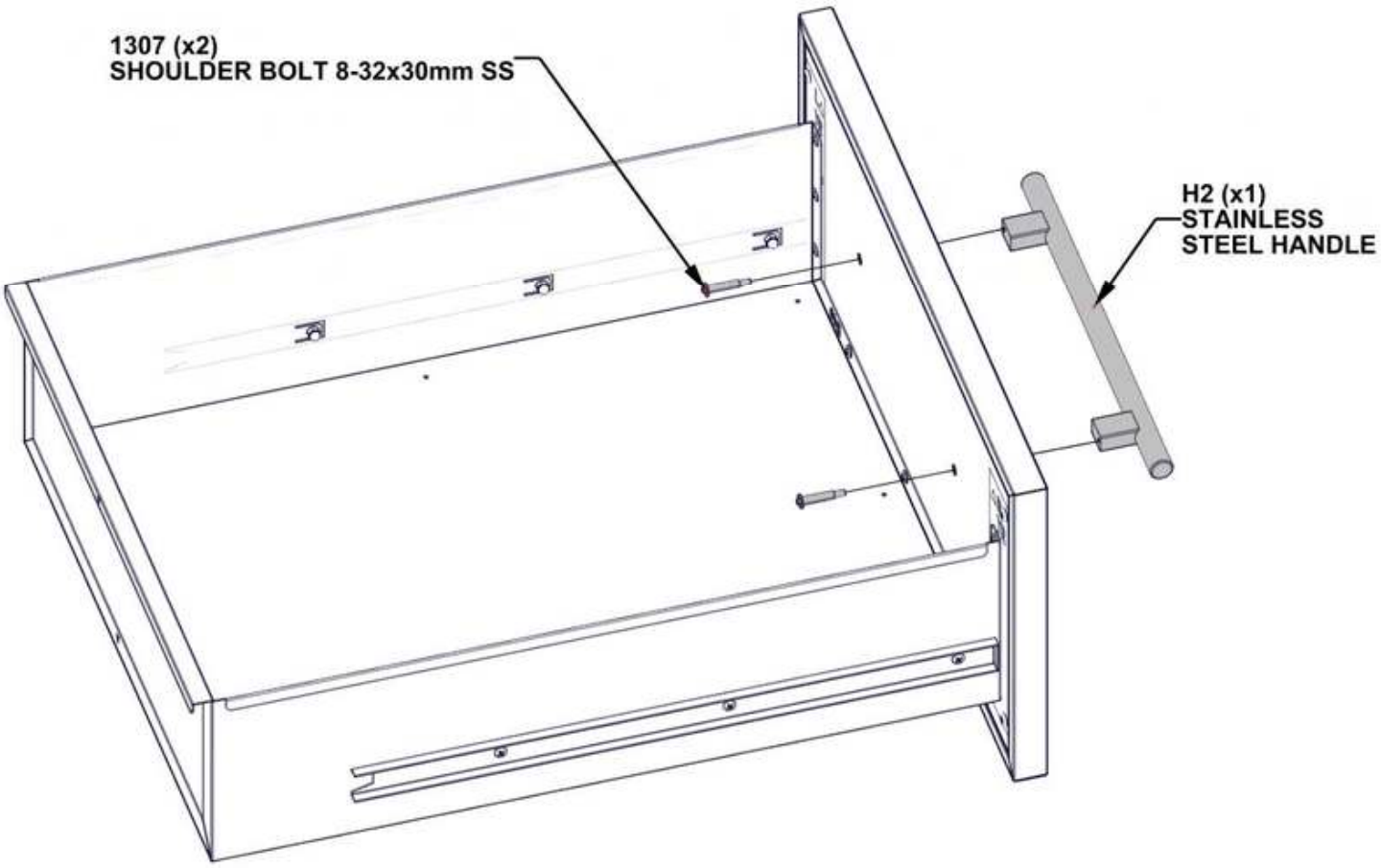

# STEP 60A - DRAWER ASSEMBLY

| Qty | PartNo | Description |
|---|---|---|
| 18 | H101289 | PAN HEAD SCREW 8-32x1/2" SS |

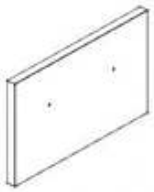

D3 CABINET DRAWER PANEL ASSEMBLY - A4M03569
(x2) 17 3/4"x10 1/4"x15/16" (24x260x451)

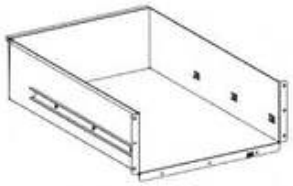

D4 CABINET DRAWER BODY ASSEMBLY - A4M03571
(x2) 22 1/4"x16 1/16"x6 7/16" (164x408x565)

**- REPEAT THIS STEP 2 TIMES.**

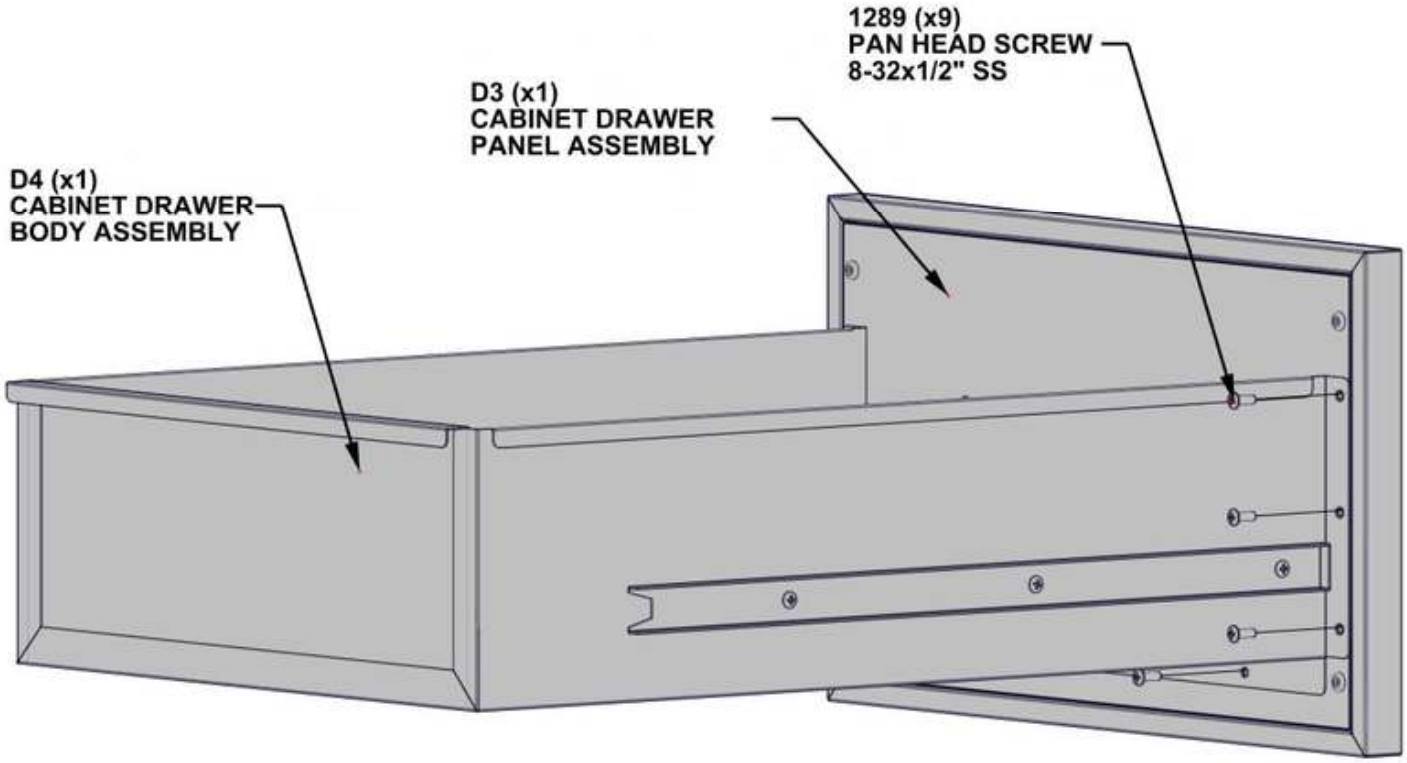

# STEP 60B - DRAWER ASSEMBLY

| Qty | PartNo | Description |
|---|---|---|
| 4 | H101307 | SHOULDER BOLT 8-32x30mm SS |

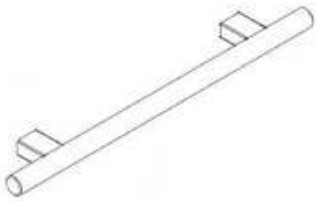

H2 STAINLESS STEEL HANDLE - A4M03024
(x2) 5/8"x1 9/16"x11 13/16" (16x40x300)

- INSTALL DRAWER HANDLE TO DRAWER.
- REPEAT THIS STEP 2 TIMES.

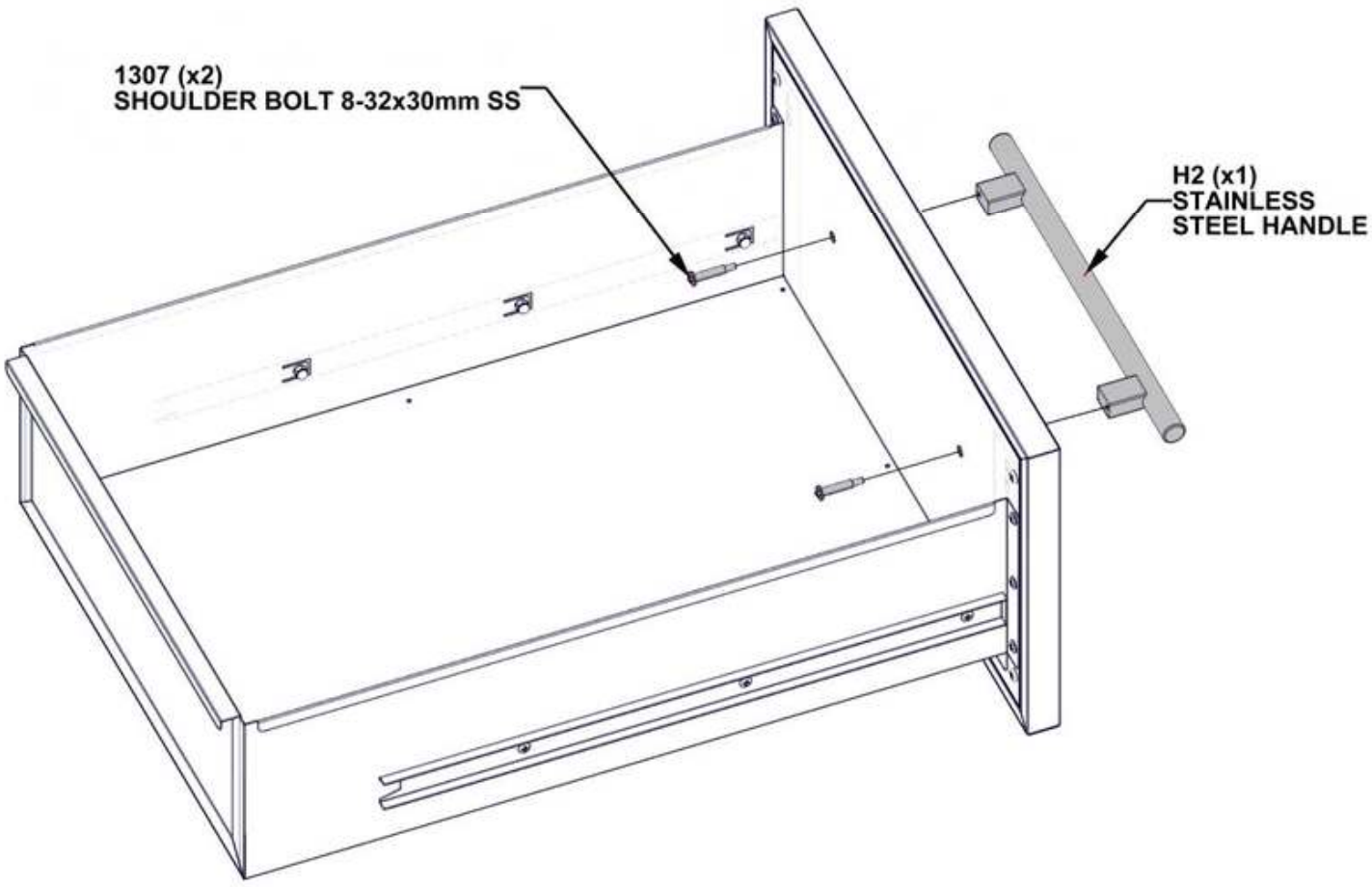

# STEP 61A - CABINET DRAWER ATTACHMENT

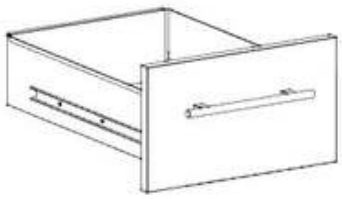

DRAWER ASSEMBLY STEPS FROM 60A-60B

- ATTACH DRAWER ASSEMBLY BY ALIGNING BOTH ENDS OF FACTORY ASSEMBLED DRAWER SLIDES WITH ONE ANOTHER.
- PRESS TOGETHER UNTIL DRAWER SLIDES CONNECT.

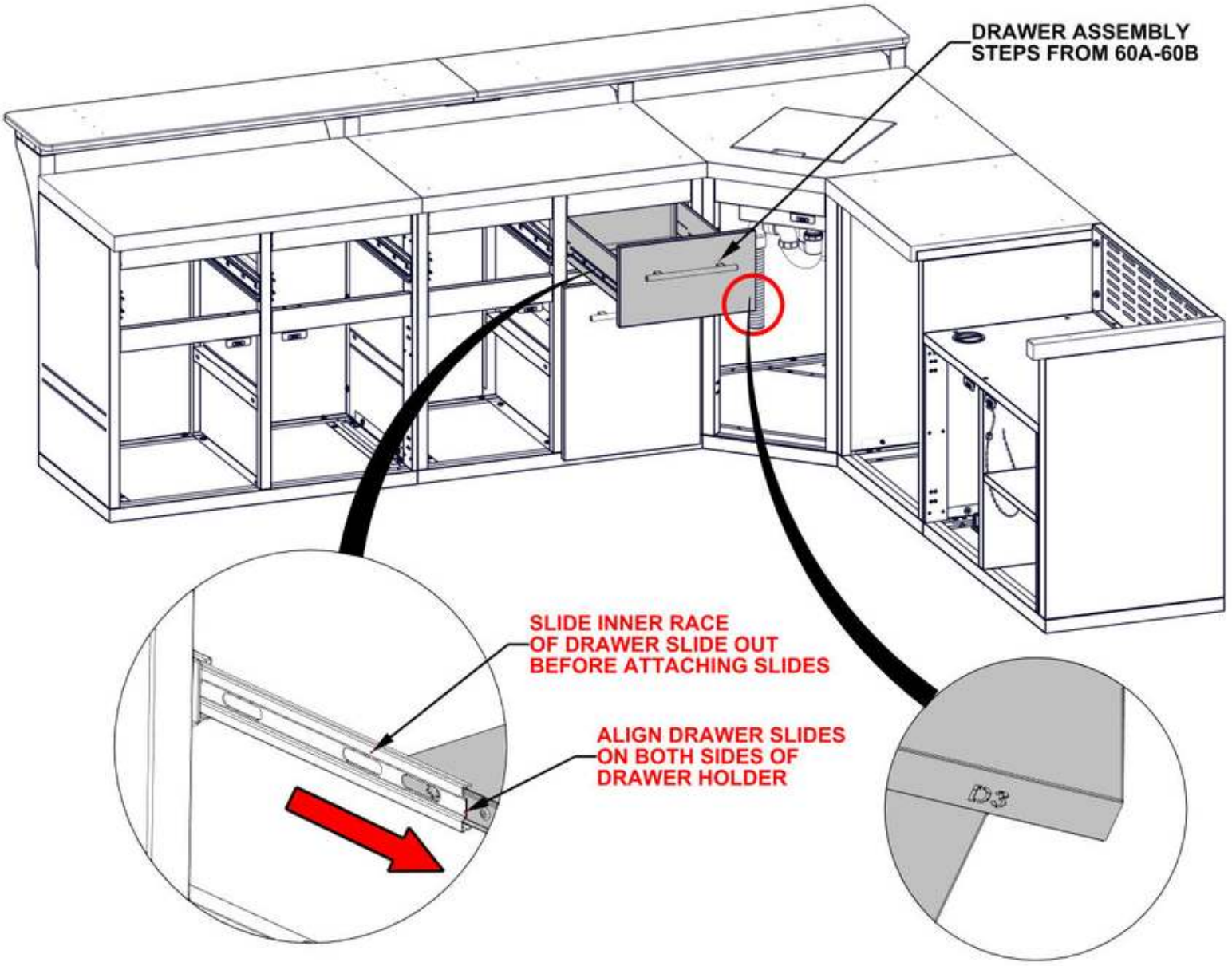

# STEP 61B - CABINET DRAWER ATTACHMENT

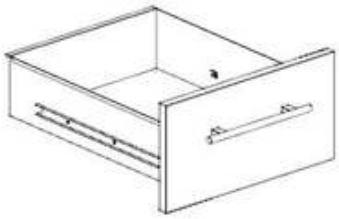

DRAWER ASSEMBLY STEPS 58A-58B

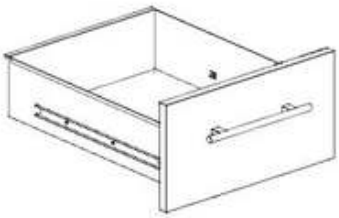

DRAWER ASSEMBLY STEPS 59A-59B

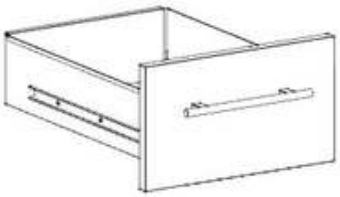

DRAWER ASSEMBLY STEPS 60A-60B

**- REPEAT STEP 61A TO INSTALL REMAINING THREE DRAWERS.**

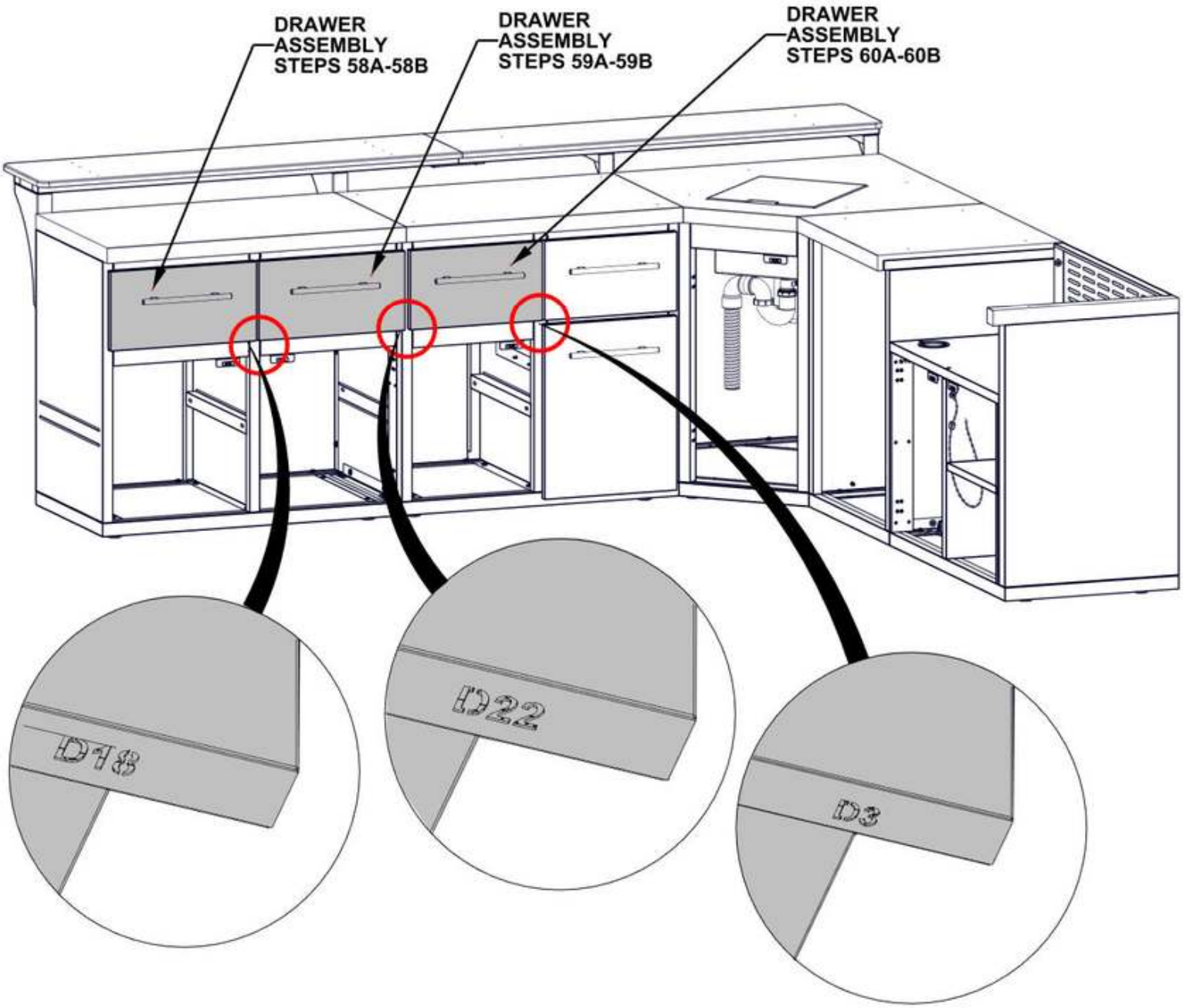

# STEP 62A - CABINET SHELF ASSEMBLY

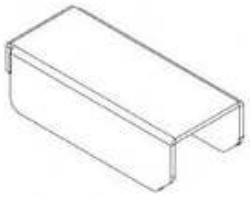

A5 SHELF BRACKET - A4M03141
(x12) 5/8"x7/8"x2 1/16" (16x22x53)

- ATTACH SHELF BRACKETS ON BOTH SIDES OF CABINETS.

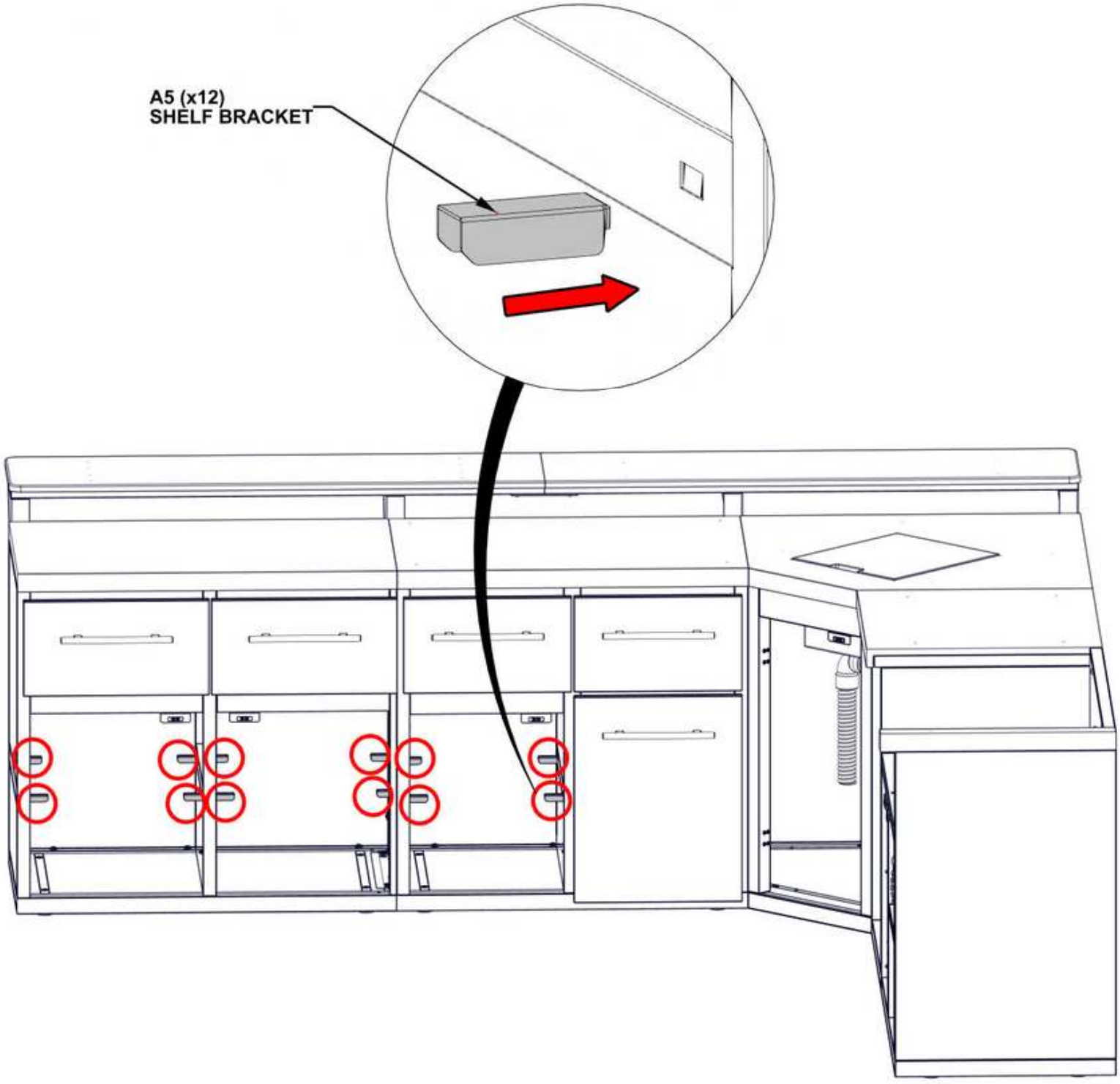

# STEP 62B - CABINET SHELF ASSEMBLY



L8 SHELF - A4M05644
(x1) 23 1/4"x16 1/4"x1" (25x412x591)

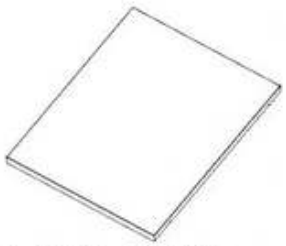

L9 SHELF - A4M05645
(x1) 23 1/4"x18 1/4"x1" (25x463x591)



L11 SHELF - A4M05648
(x1) 23 1/4"x19"x1" (25x482x591)

- PUT SHELFS ON THE SHELF BRACKETS.

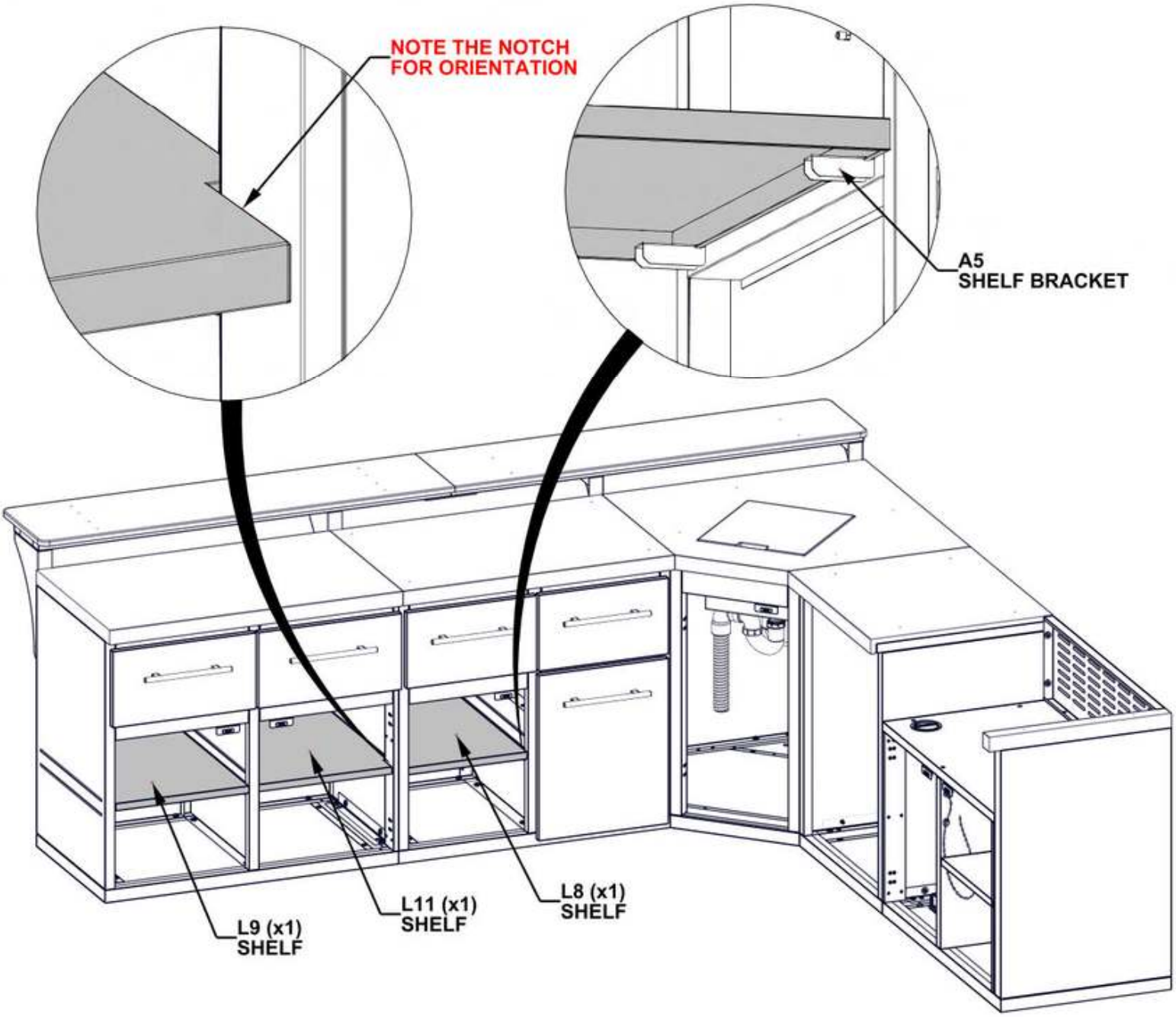

# STEP 63A - DOOR ASSEMBLY

| Qty | PartNo | Description |
|---|---|---|
| 24 | H101185 | PHILLIPS FLAT HEAD 8-32x.5 SCREW |



D20 DOOR PANEL ASSEMBLY L - A4M03701
(x1) 22 1/4"x19 5/8"x15/16" (24x498x565)



D21 DOOR PANEL ASSEMBLY R - A4M03703
(x1) 22 1/4"x19 5/8"x15/16" (24x498x565)



D6 CABINET DOOR ASSEMBLY L - A4M03577
(x1) 22 1/4"x17 13/16"x15/16" (24x452x565)



A4M03025 FULL OVERLAY HINGE
(x12)



D7 CABINET DOOR ASSEMBLY L - A4M03587
(x1) 24 13/16"x19 1/16"x15/16" (24x484x630)



D8 CABINET DOOR ASSEMBLY R - A4M03590
(x1) 24 13/16"x19 1/16"x15/16" (24x484x630)



D23 CABINET FRONT DOOR ASSEMBLY - A4M04720
(x1) 33 1/16"x16 1/16"x15/16" (24x408x840)

- INSTALL CABINET HINGES TO ALL DOORS.
- DO NOT OVERTIGHTEN HARDWARE.
- REPEAT FOR ALL DOOR ASSEMBLIES IN THIS STEP.

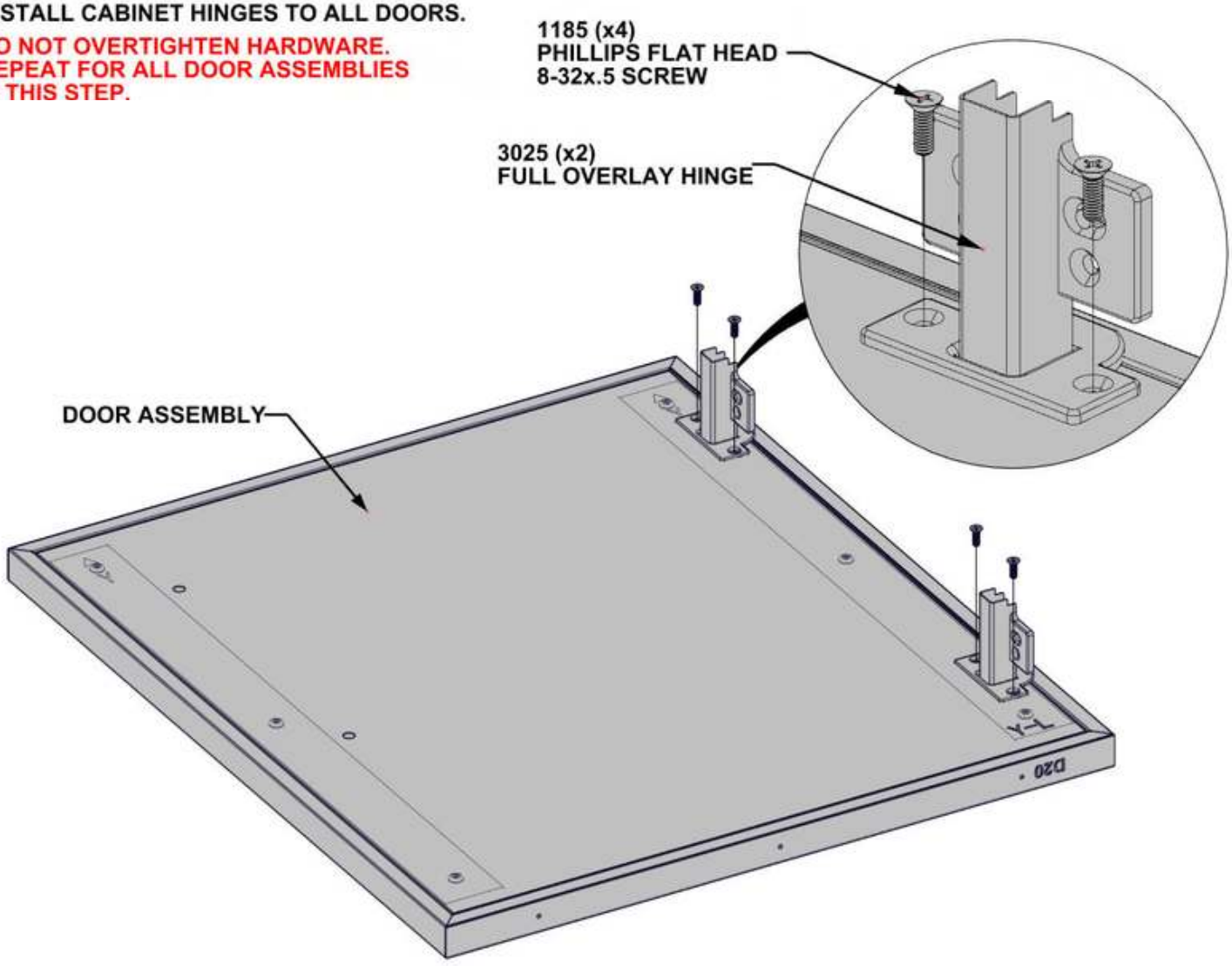

# STEP 63B - DOOR ASSEMBLY

| Qty | PartNo | Description |
|---|---|---|
| 12 | H101307 | SHOULDER BOLT 8-32x30mm SS |

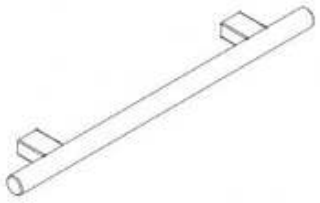

H2 STAINLESS STEEL HANDLE - A4M03024
(x6) 5/8"x1 9/16"x11 13/16" (16x40x300)

- INSTALL CABINET HANDLES TO ALL DOORS.
- REPEAT THIS STEP 6 TIMES.

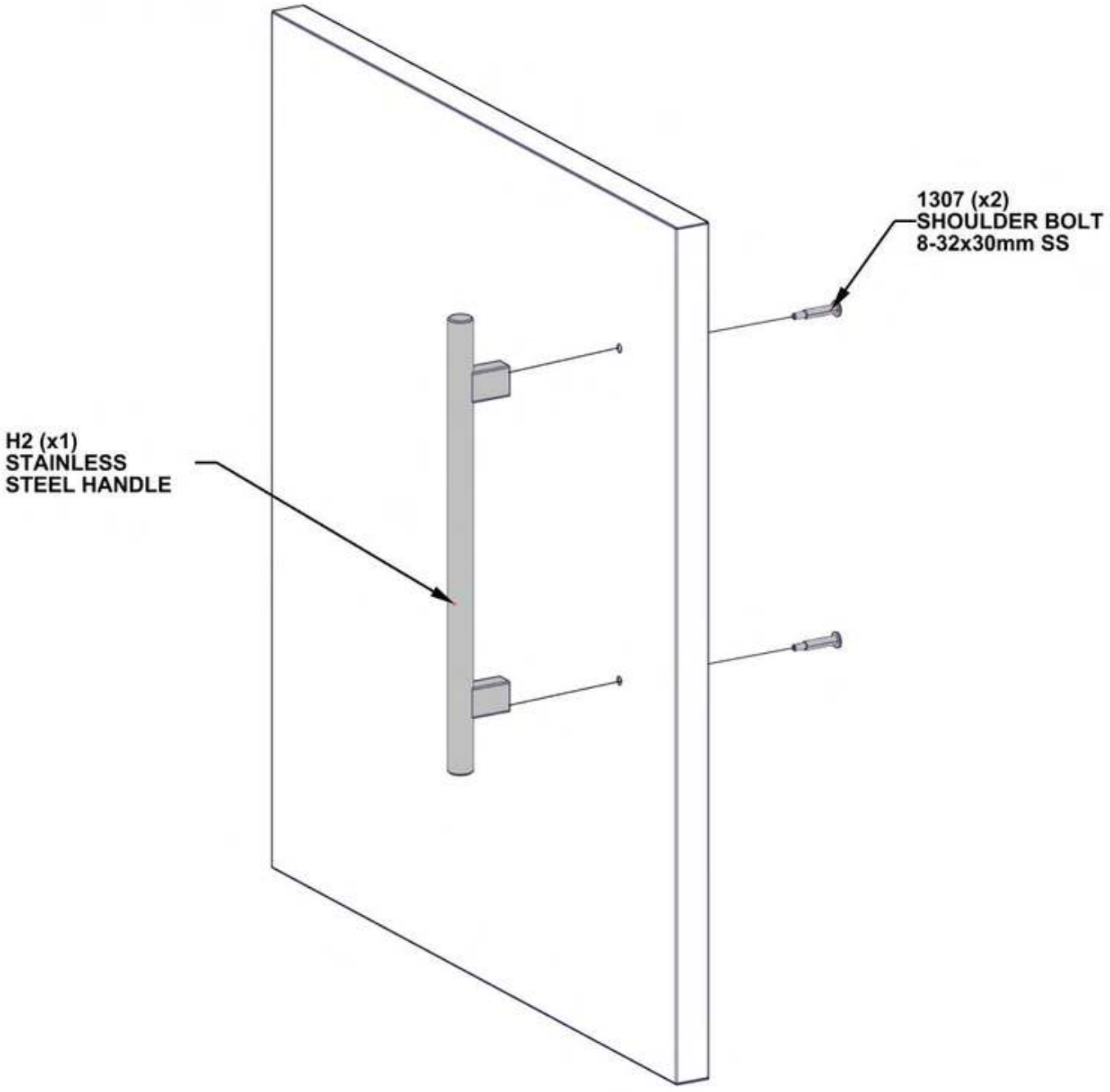

# STEP 64 - CABINET DOOR ATTACHMENT



D20 DOOR PANEL ASSEMBLY L - A4M03701
(x1) 22 1/4"x19 5/8"x15/16" (24x498x565)

| Qty | PartNo | Description |
|---|---|---|
| 8 | H101185 | PHILLIPS FLAT HEAD 8-32x.5 SCREW |

- FOR THIS STEP IT IS HELPFUL TO HAVE AN ADDITIONAL PERSON HELP HOLD DOOR IN PLACE.
- WITH CABINET HINGES ATTACHED TO DOOR, ALIGN HOLES IN HINGE BRACKET WITH THREADED INSERTS IN SIDE OF CABINET PANEL.

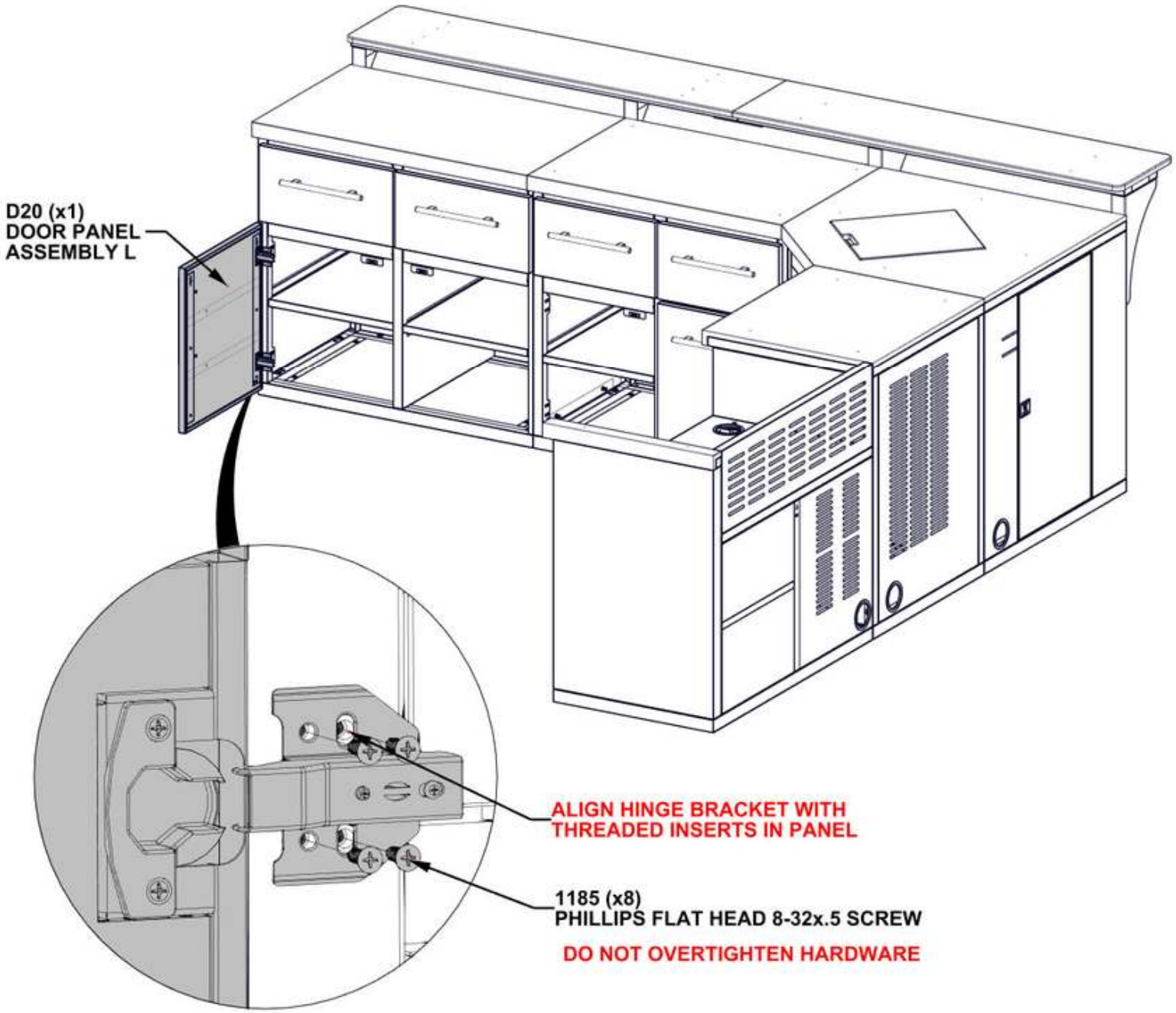

# STEP 65 - CABINET DOOR ATTACHMENT

| Qty | PartNo | Description |
|---|---|---|
| 8 | H101185 | PHILLIPS FLAT HEAD 8-32x.5 SCREW |

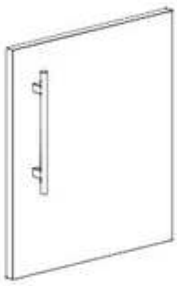

D21 (x1) DOOR PANEL ASSEMBLY R - A4M03703
22 1/4"x19 5/8"x15/16" (24x498x565)

- FOR THIS STEP IT IS HELPFUL TO HAVE AN ADDITIONAL PERSON HELP HOLD DOOR IN PLACE.
- WITH CABINET HINGES ATTACHED TO DOOR, ALIGN HOLES IN HINGE BRACKET WITH THREADED INSERTS IN SIDE OF CABINET PANEL.

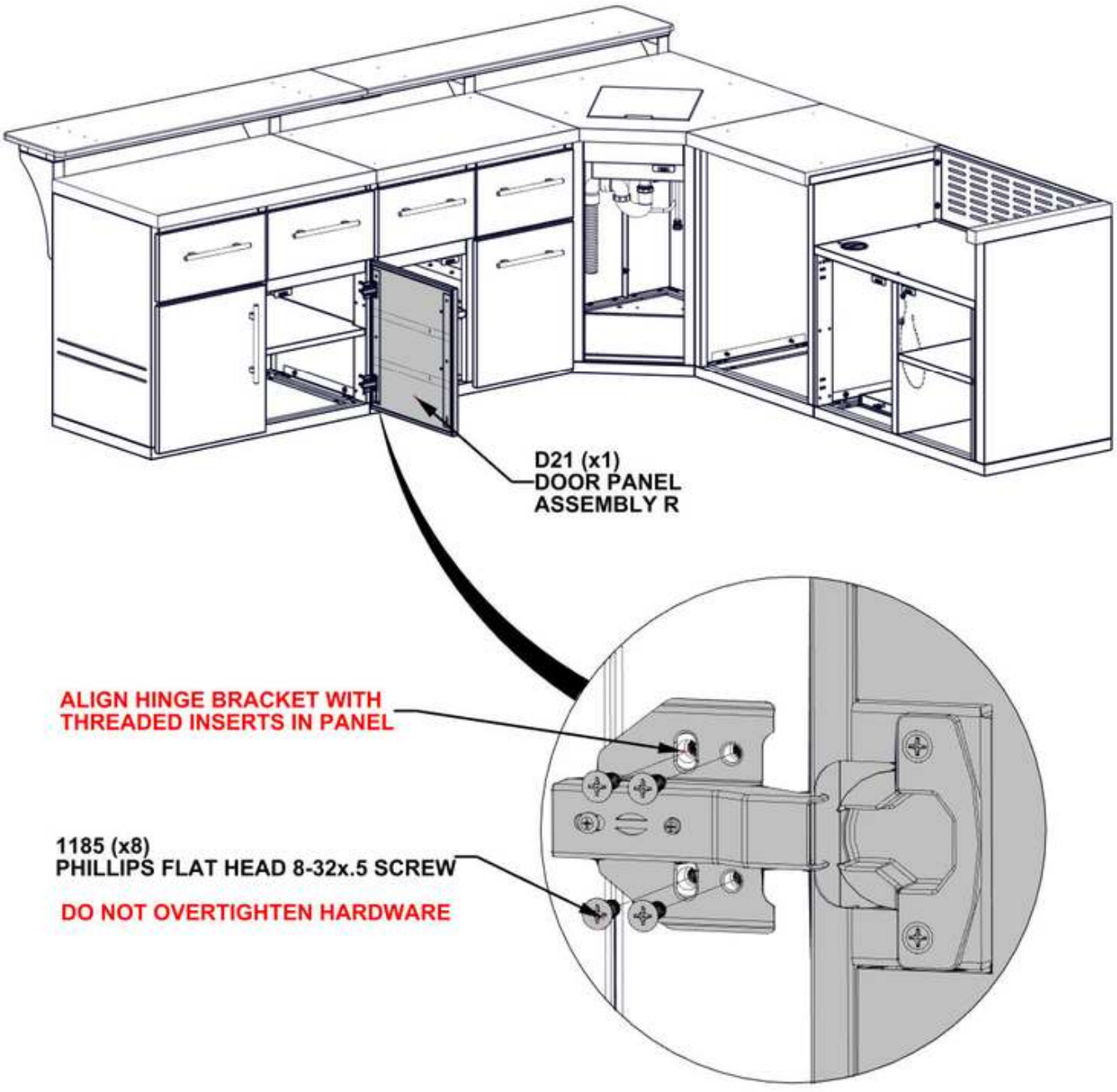

# STEP 66 - CABINET DOOR ATTACHMENT



| Qty | PartNo | Description |
|---|---|---|
| 8 | H101185 | PHILLIPS FLAT HEAD 8-32x.5 SCREW |

**D6 CABINET DOOR ASSEMBLY L - A4M03577**
**(x1) 22 1/4"x17 13/16"x15/16" (24x452x565)**

- FOR THIS STEP IT IS HELPFUL TO HAVE AN ADDITIONAL PERSON HELP HOLD DOOR IN PLACE.
- WITH CABINET HINGES ATTACHED TO DOOR, ALIGN HOLES IN HINGE BRACKET WITH THREADED INSERTS IN SIDE OF CABINET PANEL.

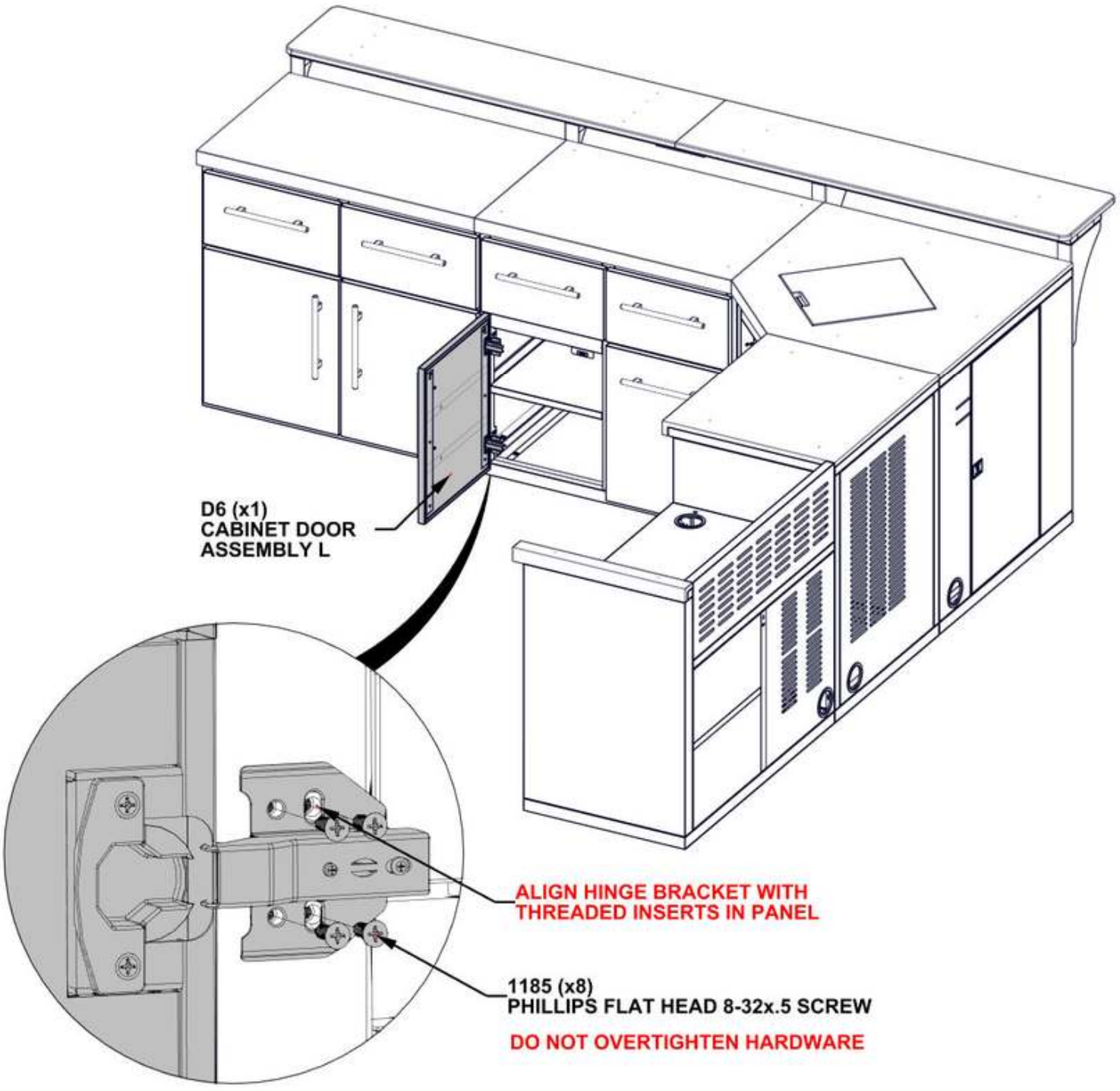

# STEP 67 - CABINET DOOR ATTACHMENT

| Qty | PartNo | Description |
|---|---|---|
| 8 | H101185 | PHILLIPS FLAT HEAD 8-32x.5 SCREW |



D23 CABINET FRONT DOOR ASSEMBLY - A4M04720
(x1) 33 1/16"x16 1/16"x15/16" (24x408x840)

- FOR THIS STEP IT IS HELPFUL TO HAVE AN ADDITIONAL PERSON HELP HOLD DOOR IN PLACE.
- WITH CABINET HINGES ATTACHED TO DOOR, ALIGN HOLES IN HINGE BRACKET WITH THREADED INSERTS IN SIDE OF CABINET PANEL.

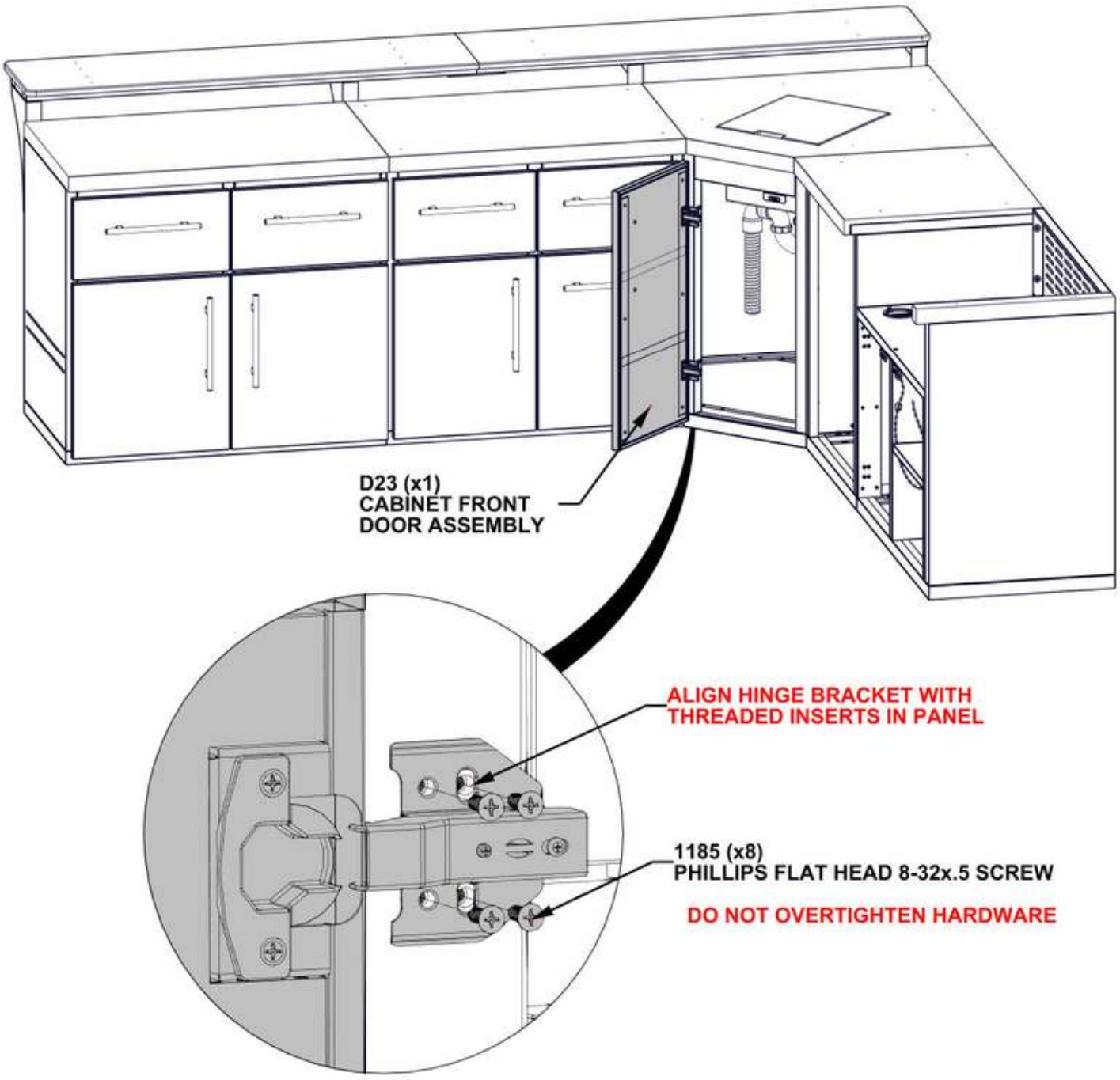

# STEP 68 - CABINET DOOR ATTACHMENT

| Qty | PartNo | Description |
|---|---|---|
| 8 | H101185 | PHILLIPS FLAT HEAD 8-32x.5 SCREW |



D7 CABINET DOOR ASSEMBLY L - A4M03587
(x1) 24 13/16"x19 1/16"x15/16" (24x484x630)

- FOR THIS STEP IT IS HELPFUL TO HAVE AN ADDITIONAL PERSON HELP HOLD DOOR IN PLACE.
- WITH CABINET HINGES ATTACHED TO DOOR, ALIGN HOLES IN HINGE BRACKET WITH THREADED INSERTS IN SIDE OF CABINET PANEL.

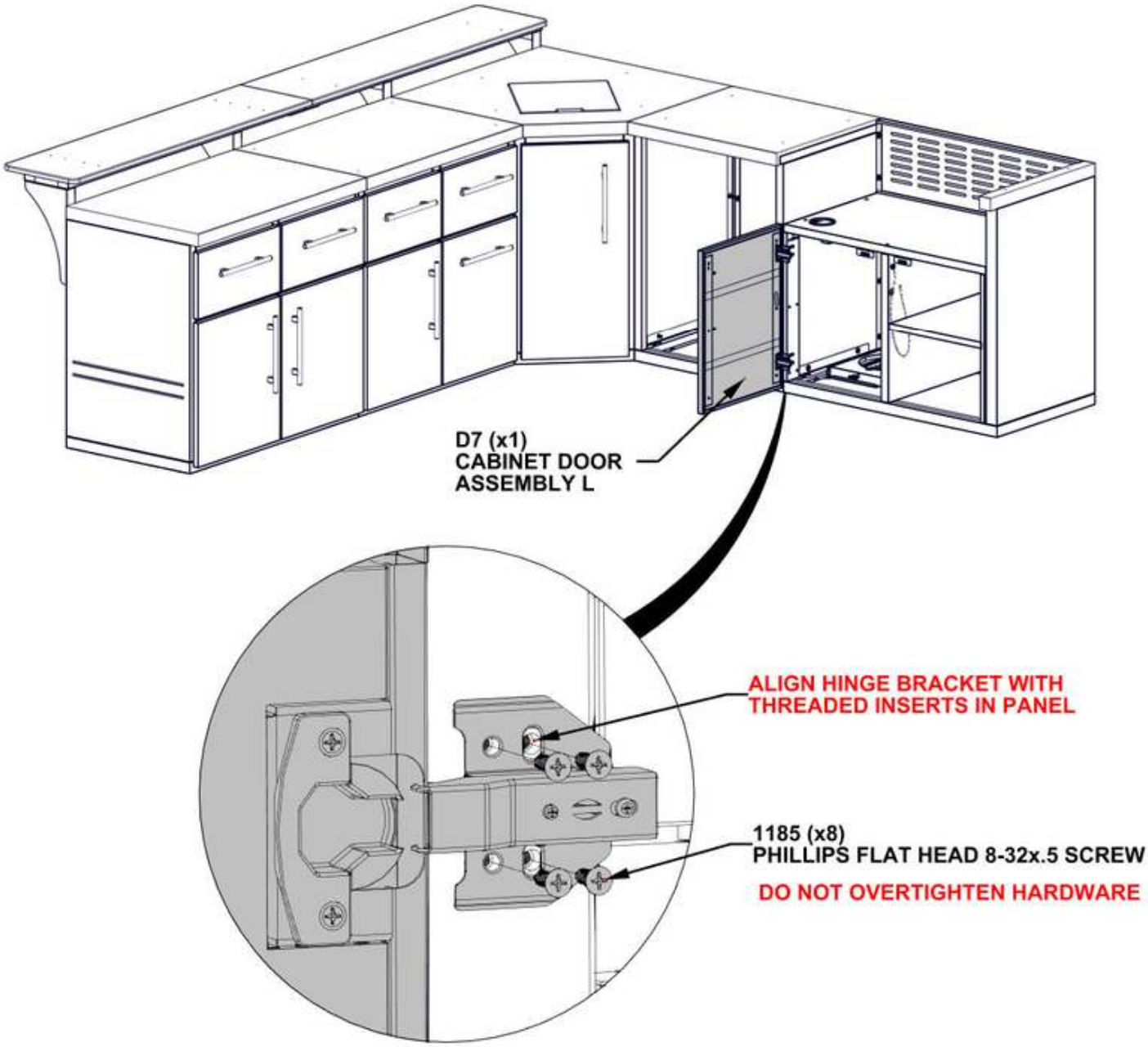

# STEP 69 - CABINET DOOR ATTACHMENT

| Qty | PartNo | Description |
|---|---|---|
| 8 | H101185 | PHILLIPS FLAT HEAD 8-32x.5 SCREW |



D8 CABINET DOOR ASSEMBLY R - A4M03590
(x1) 24 13/16"x19 1/16"x15/16" (24x484x630)

- FOR THIS STEP IT IS HELPFUL TO HAVE AN ADDITIONAL PERSON HELP HOLD DOOR IN PLACE.
- WITH CABINET HINGES ATTACHED TO DOOR, ALIGN HOLES IN HINGE BRACKET WITH THREADED INSERTS IN SIDE OF CABINET PANEL.

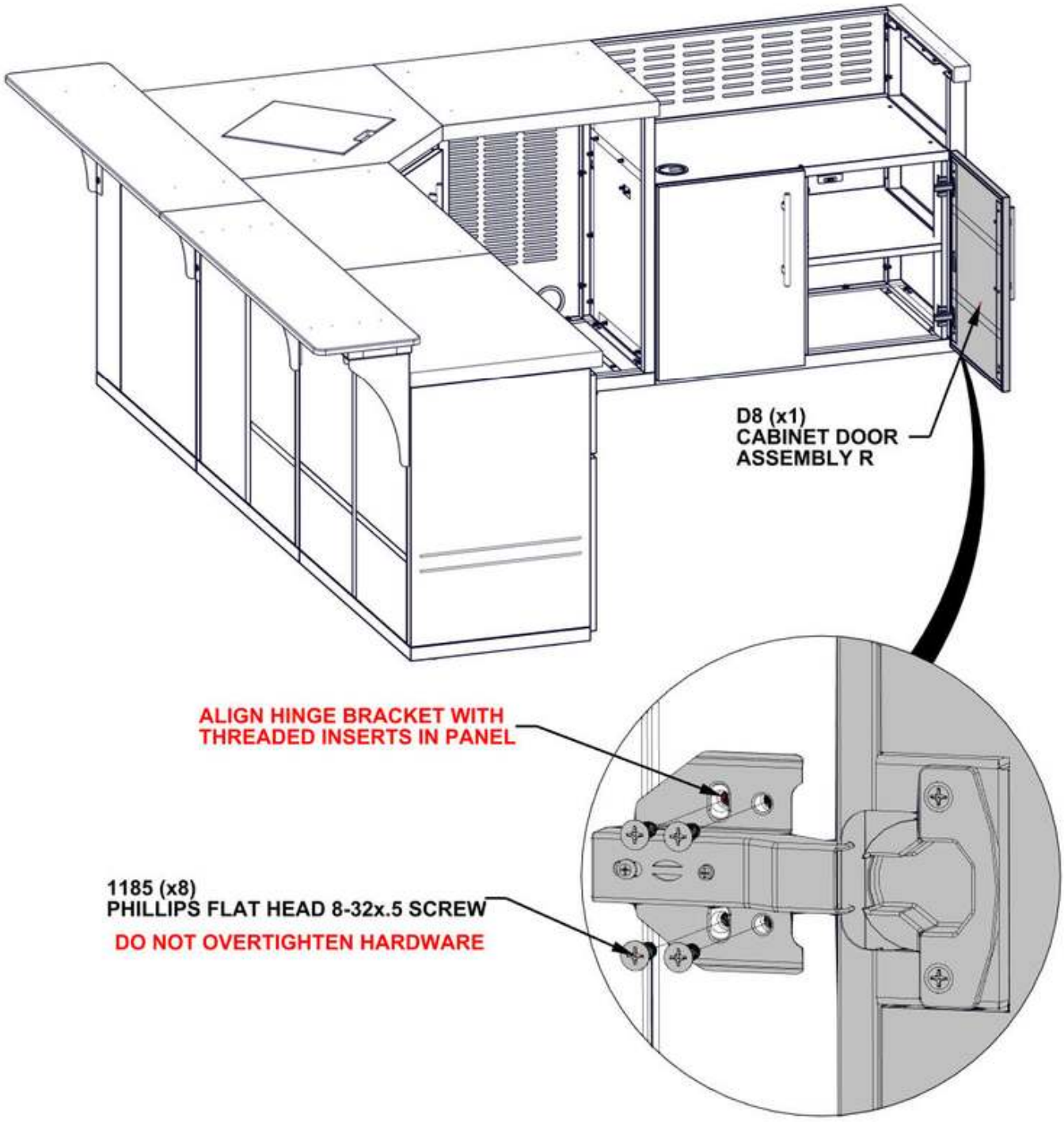

# STEP 70 - CABINET DOOR ADJUSTMENT (AS NEEDED)

- ADJUST HINGES (AS NEEDED) SO THAT THE GAP AROUND ALL DOORS IS THE SAME AND THERE IS NO INTERFERENCE BETWEEN DOORS AND CABINETS.
- ADJUST MAGNET CATCH BRACKETS AS NEEDED.

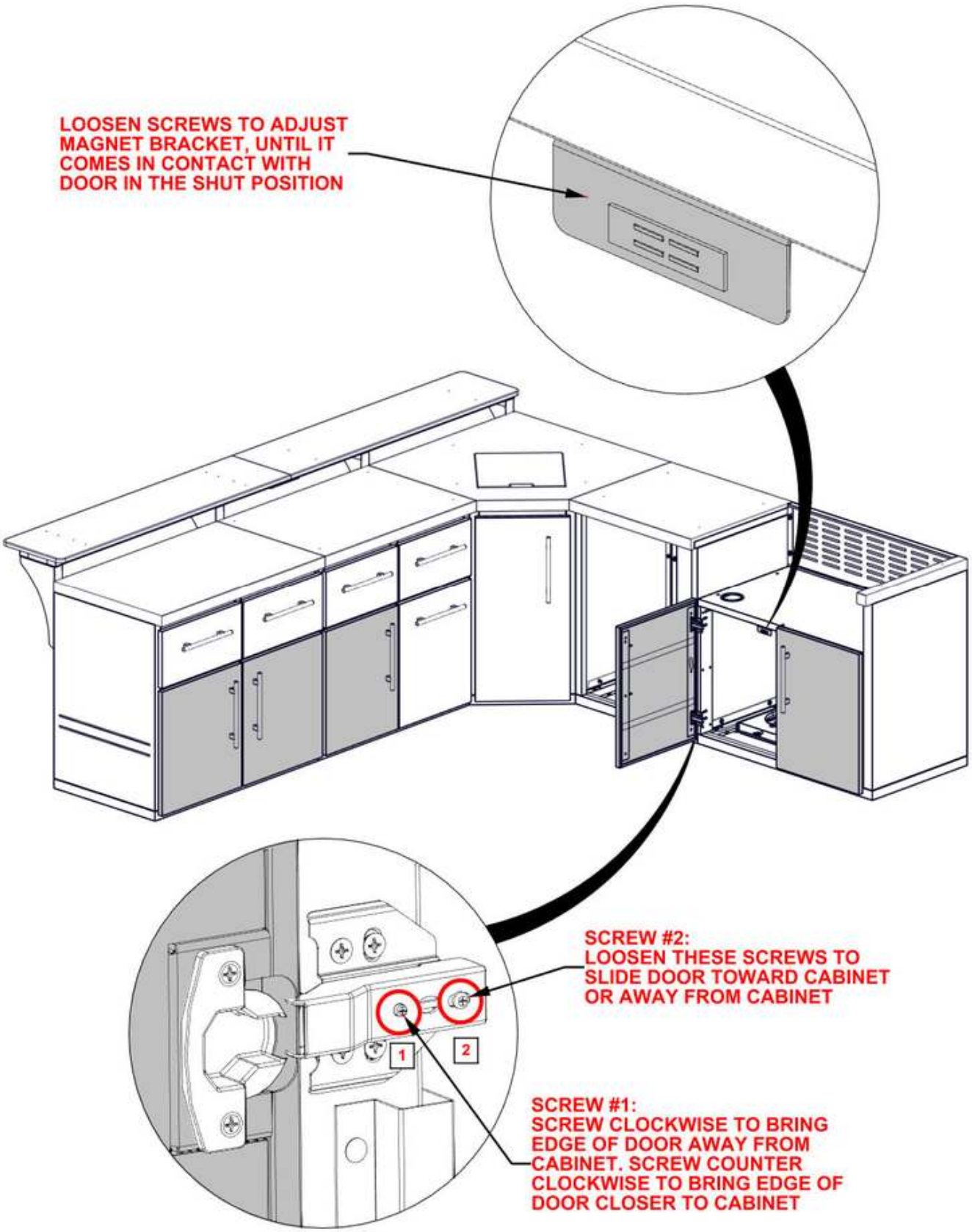

# STEP 71 - KITCHEN ACCESSORY

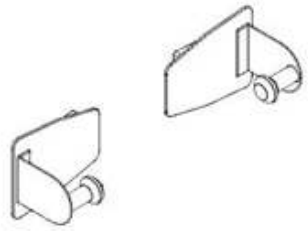

A4M02290 MAGNETIC PAPER TOWEL HOLDER
(x1)

- MAGNETIC PAPER TOWEL HOLDER CAN BE ATTACHED TO ANY METAL SURFACE ON KITCHEN.
- WE RECOMMEND ATTACHING TO THE INSIDE OF CABINET DOOR.
- MAKE SURE TO KEEP PAPER TOWEL HOLDER AT A SAFE DISTANCE FROM GRILLING SURFACE.

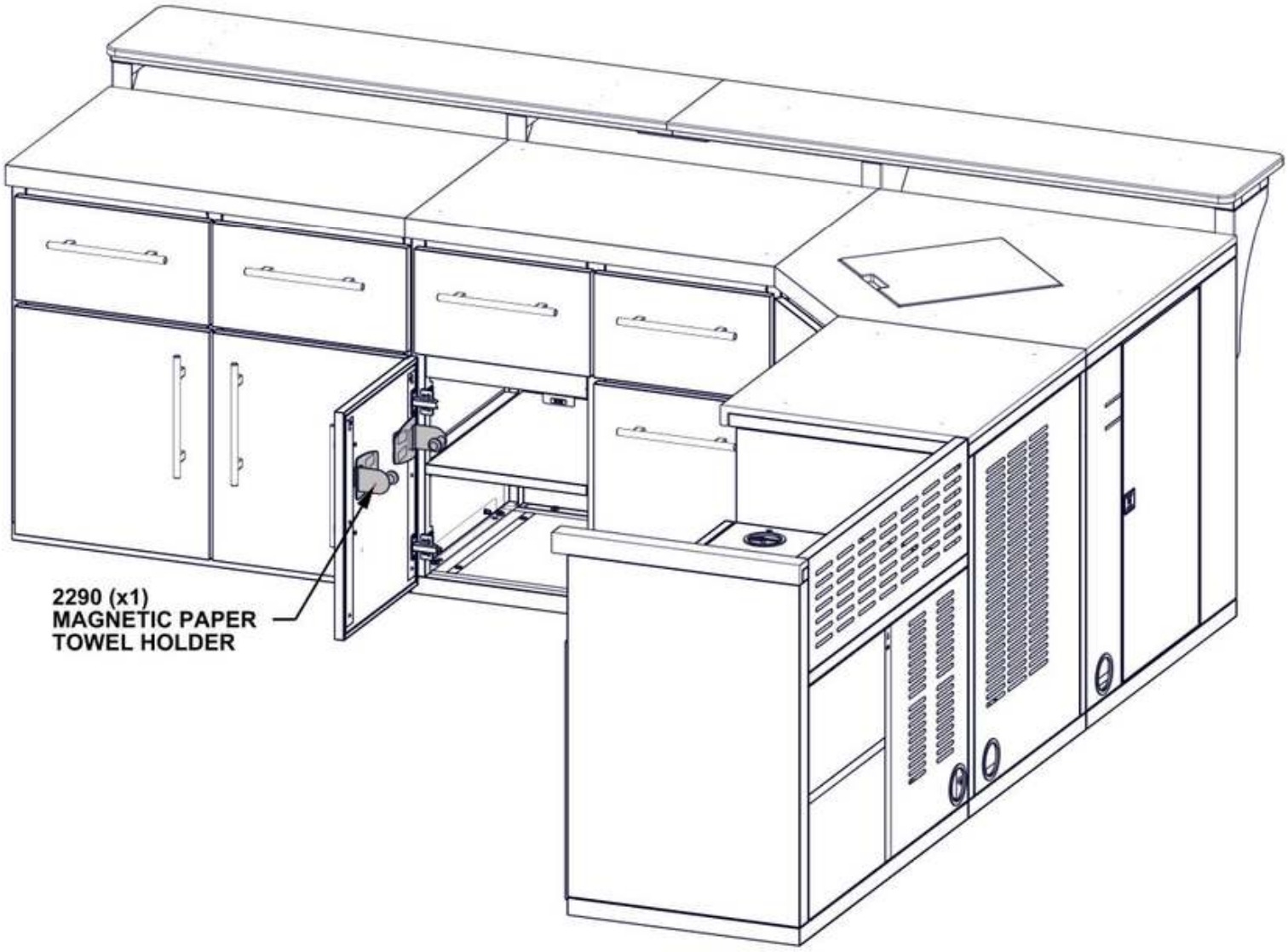

# OUTDOOR KITCHEN FRIDGE



9240162 OUTDOOR KITCHEN FRIDGE - RIGHT OPEN
(x1)

- FOR INSTALLATION OF OUTDOOR KITCHEN FRIDGE, REFER TO PAGES IN THIS INSTRUCTION MANUAL.
- FOR DETAILED INFORMATION OF OUTDOOR KITCHEN FRIDGE, REFER TO ASSEMBLY INSTRUCTIONS THAT COME PACKAGED WITH THE OUTDOOR KITCHEN FRIDGE.
- FOLLOW DIRECTIONS FOR PROPER CARE AND USE.

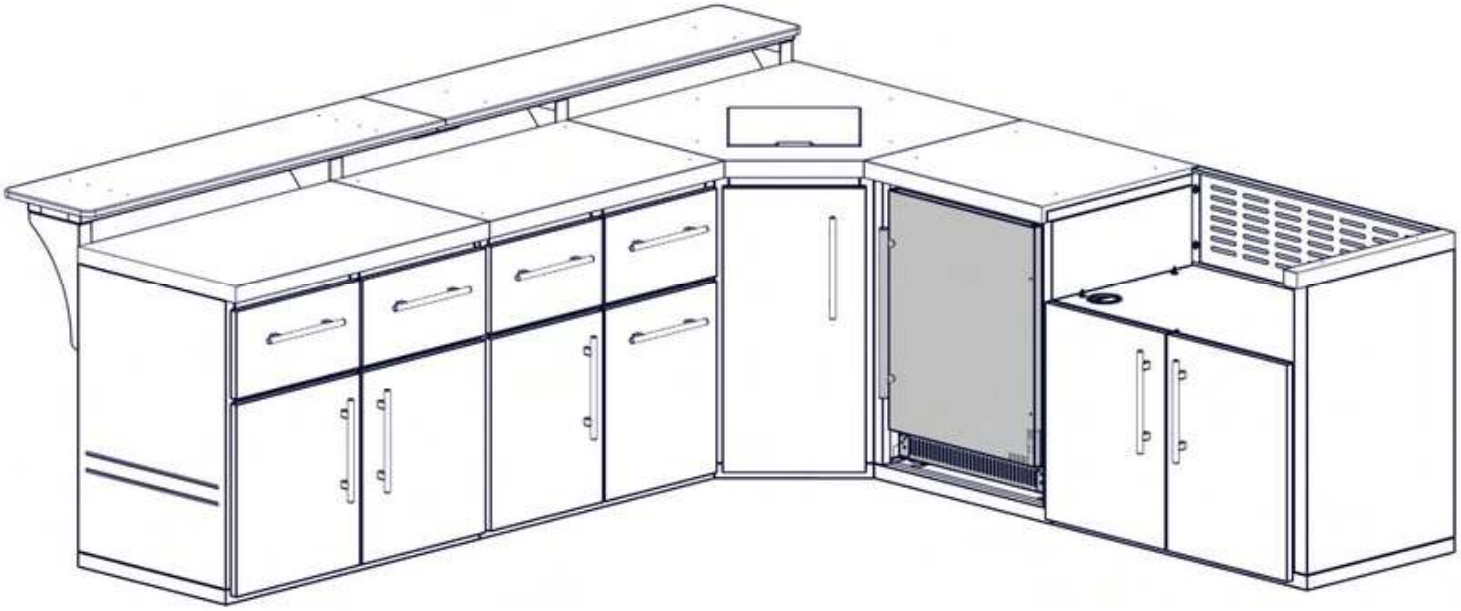

# OUTDOOR KITCHEN FRIDGE

- CAREFULLY SLIDE FRIDGE INTO CABINET OPENING MAKING SURE THAT THE ELECTRICAL CORD IS ROUTED THROUGH THE HOLES IN THE BACK PANELS OF THE CABINET.
- IF FRIDGE IS NOT IN UPRIGHT POSITION, PLEASE LET SIT FOR 24 HRS BEFORE PLUGGING INTO RECEPTACLE.
- FRIDGE CANNOT BE CONNECTED TO ELECTRICAL ENCLOSURE ATTACHED TO OUTDOOR STRUCTURE.

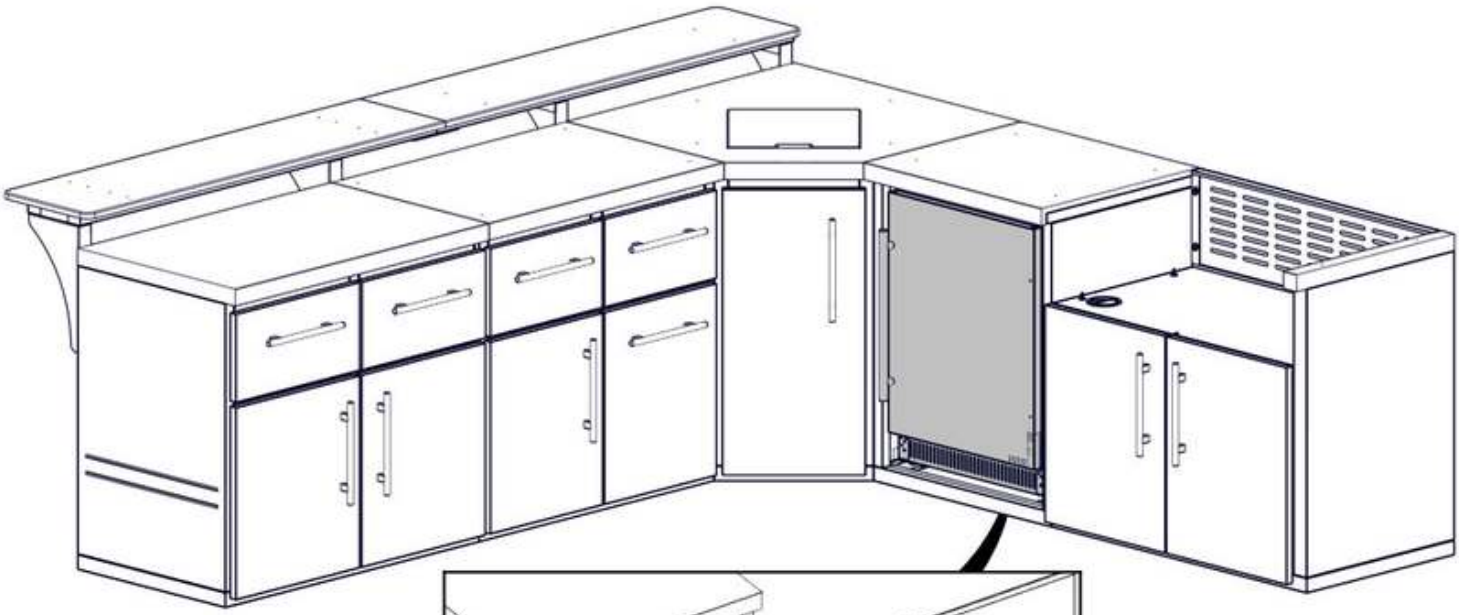

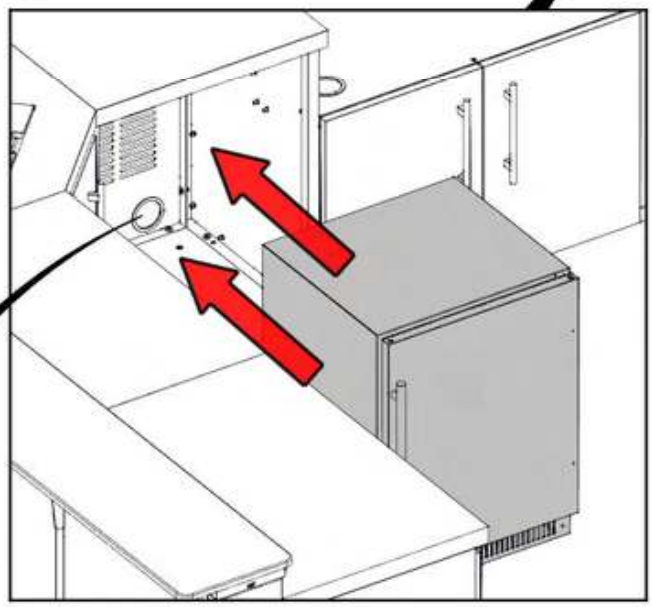

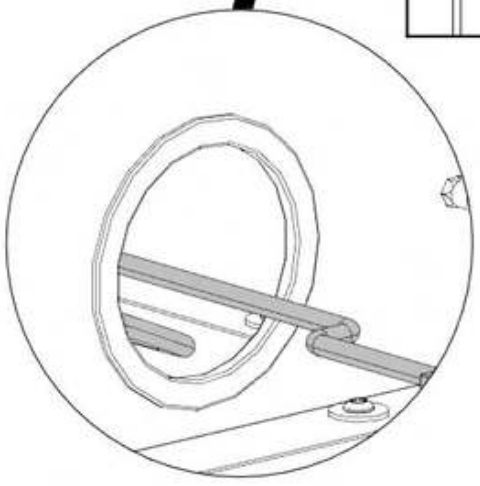

# OUTDOOR KITCHEN FRIDGE

- ALIGN FEET ON FRIDGE UNIT SO THAT IT IS LEVEL AND DOES NOT TILT.
- TURN FEET CLOCKWISE TO EXTEND THEM AND COUNTERCLOCKWISE TO SHORTEN. REPEAT THIS FOR ALL FOUR FRIDGE FEET AS NEEDED TO LEVEL.

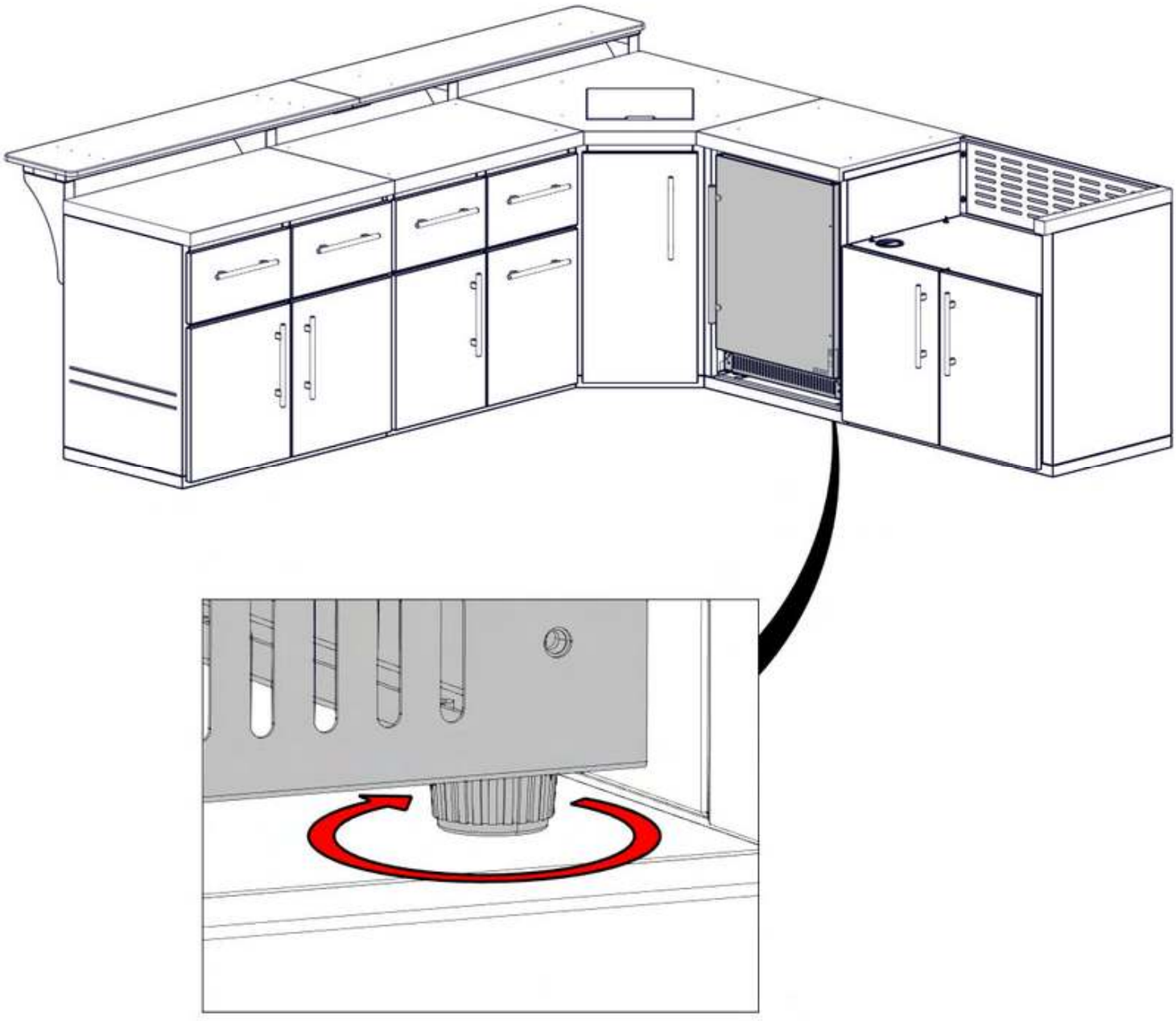

**FOR APPLIANCE INSTALLATION, REFER TO ASSEMBLY INSTRUCTIONS THAT COME PACKAGED WITH EACH INDIVIDUAL APPLIANCE. FOLLOW DIRECTIONS FOR PROPER INSTALLATION.**

# OUTDOOR KITCHEN APPLIANCE COVER INSTALLATION

- APPLIANCE COVERS WILL COME PACKAGED WITH EACH RESPECITVE APPLIANCE.
- CABINET COVER WILL HAVE CUTOUTS FOR EACH APPLIANCE LOCATION.

- INSTALL CABINET COVER OVER FULLY ASSEMBLED KITCHEN PACKAGE. NOTE: COVER SHOULD GO ON AFTER APPLIANCES ARE INSTALLED.
- INSTALL INDIVIDUAL APPLIANCE COVERS OVER EACH APPLIANCE, MAKING SURE FLAPS ARE ON THE OUTSIDE OF THE CABINET COVER, AND VELCRO STRIPS ARE FIRMLY CONNECTED.

