KINGSTON

TO ORDER PARTS, CALL: 1-877-252-7277
www.kingstonbrass.com

VPB3308B

30" Ceramic Console Sink Basin

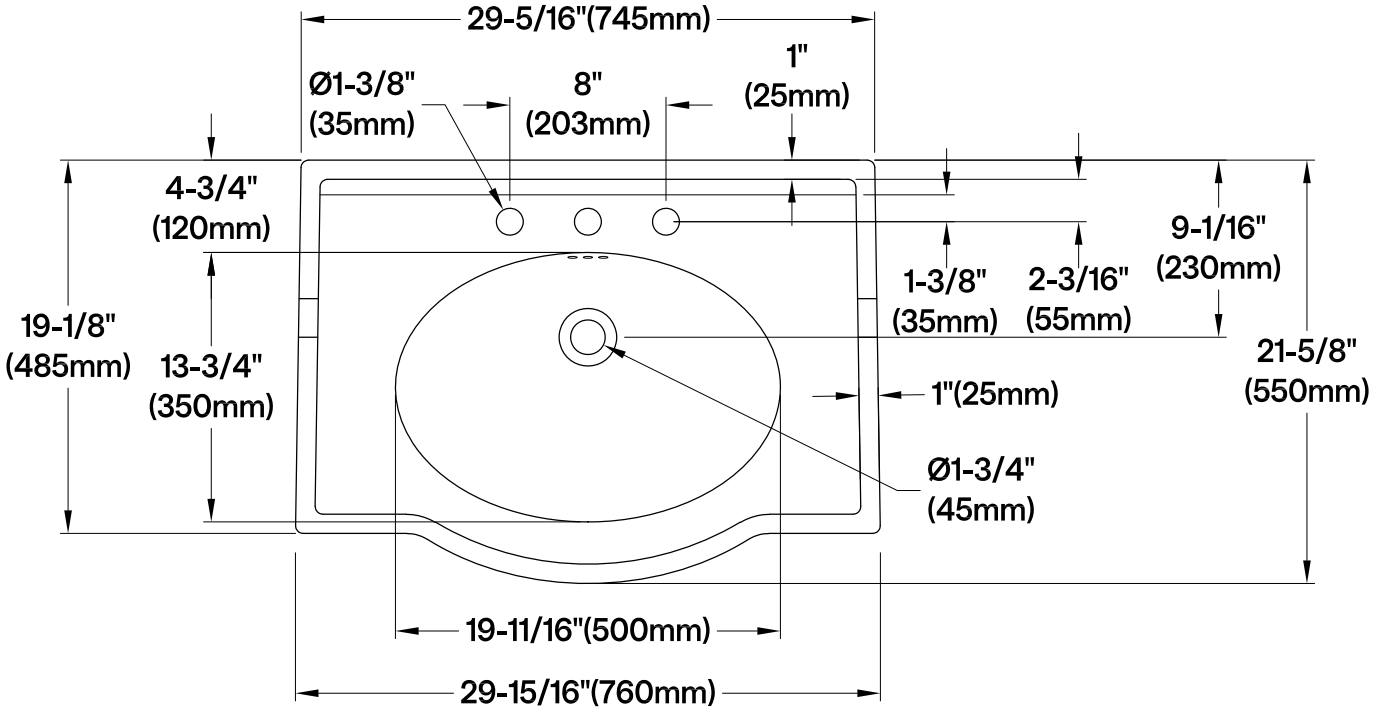

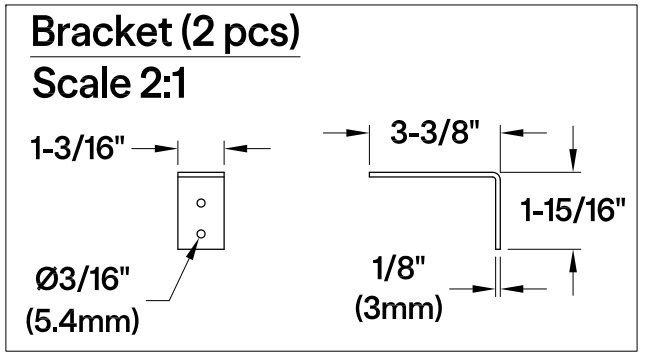

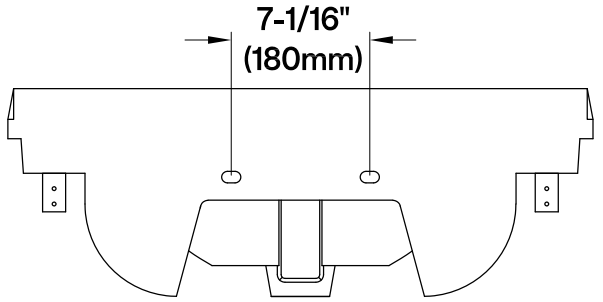

Back View

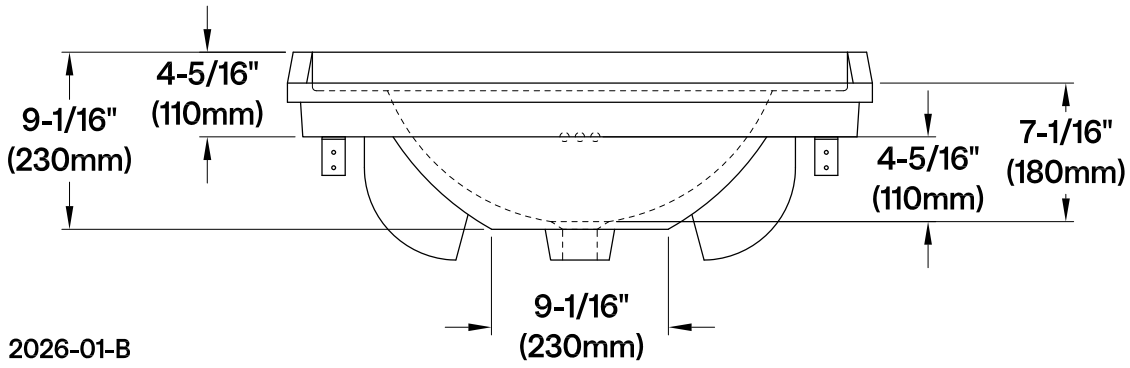

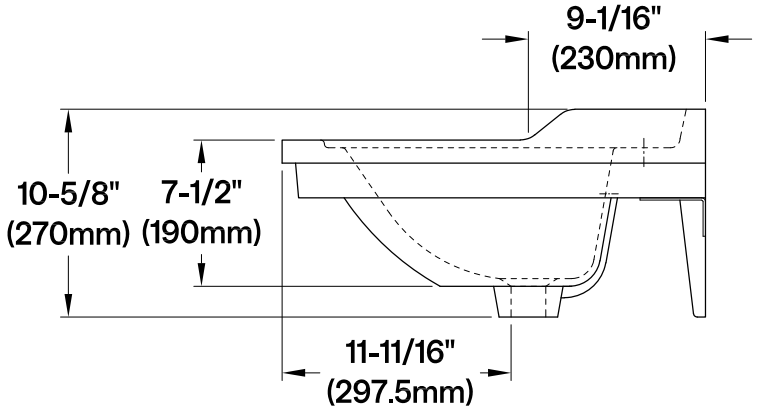

2026-01-B