ASSEMBLY INSTRUCTIONS

5-DRAWER CHEST

A Top Panel

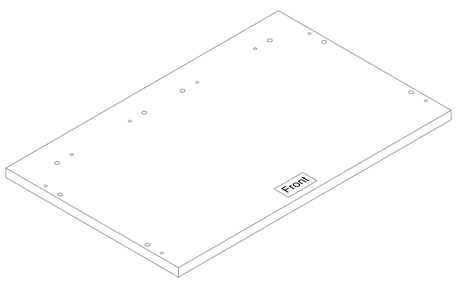

1pc

B Left Side Panel

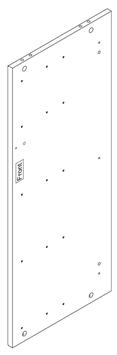

1pc

C Right Side Panel

1pc

D Bottom Panel

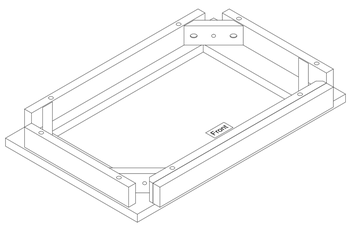

1pc

E Back Left Panel

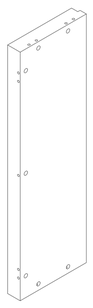

1pc

F Back Right Panel

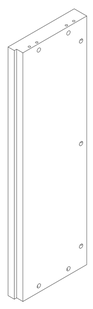

1pc

G Center Bar

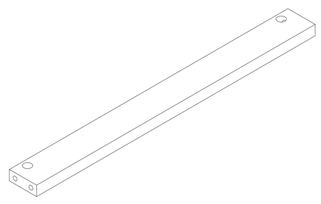

1pc

H Post

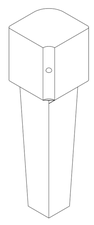

4pcs

I Small Drawer Side (Left)

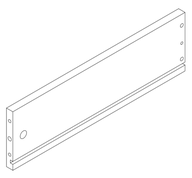

2pcs

J Small Drawer Side (Right)

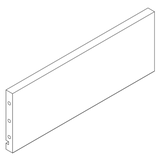

2pcs

K Small Drawer Front

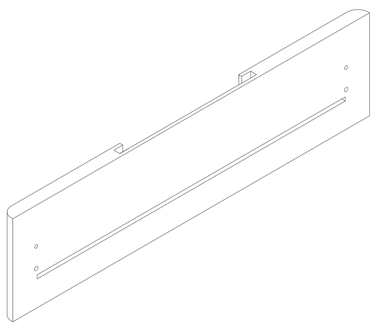

2pcs

L Small Drawer Back

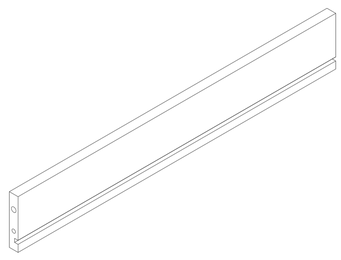

2pcs

M Big Drawer Side (Left)

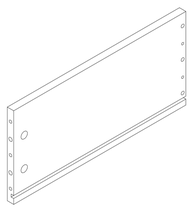

3pcs

N Big Drawer Side (Right)

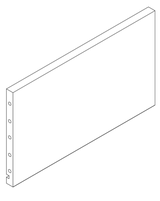

3pcs

O Big Drawer Front

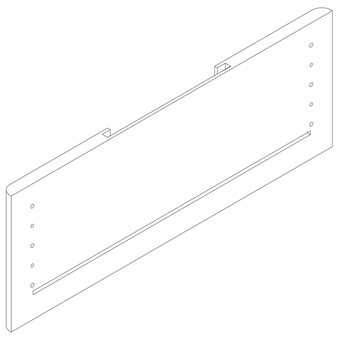

3pcs

P Big Drawer Back

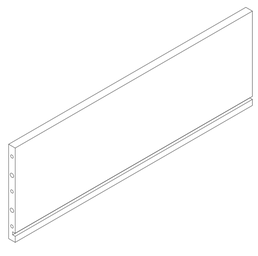

3pcs

Q Drawer Base

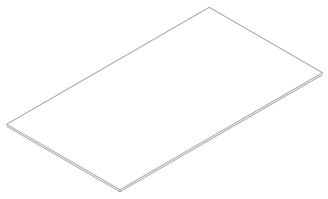

5pcs

R Runner 250mm

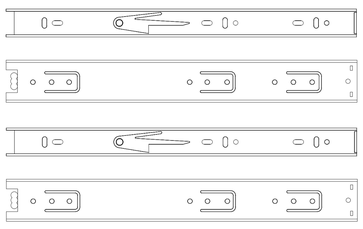

5sets

S Dowel M6 x 30mm

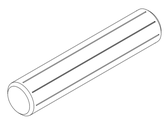

44pcs

T Dowel M8 x 35mm

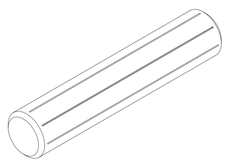

22pcs

U Cam Bolt
5 x 25mm

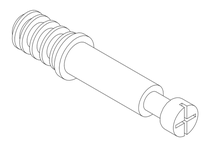

56pcs

V Cam Lock
15 x 12mm

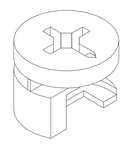

56pcs

W Cam Lock Cover
17 x 5mm

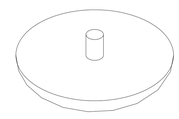

56pcs

X Screw
M3 x 16mm

60pcs

Y JCBC Bolt
M6 x 60mm

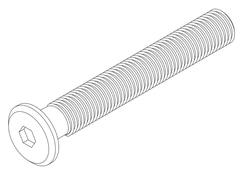

4pcs

Z Spring Washer
M8

4pcs

AA Flat Washer
M8

4pcs

AB Allen Key
M4

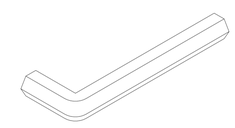

1pc

AC Anti-Tip Kit

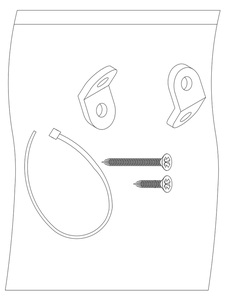

1set

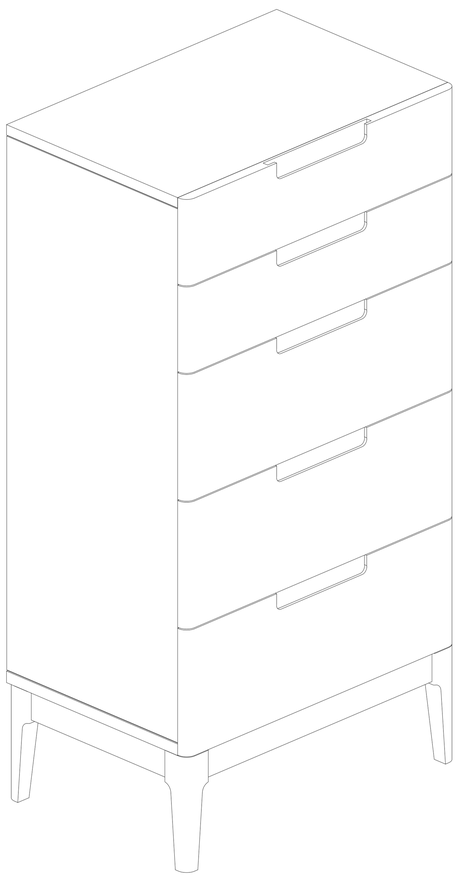

These pages list all the contents included in the box. Please take the time to identify the hardware as well as the individual components to this product. As you unpack and prepare for assembly, place the contents on a carpeted or padded area to protect them from damage.

1 Insert Cam Bolt (U) into the Top Panel (A) with a screwdriver (not provided).

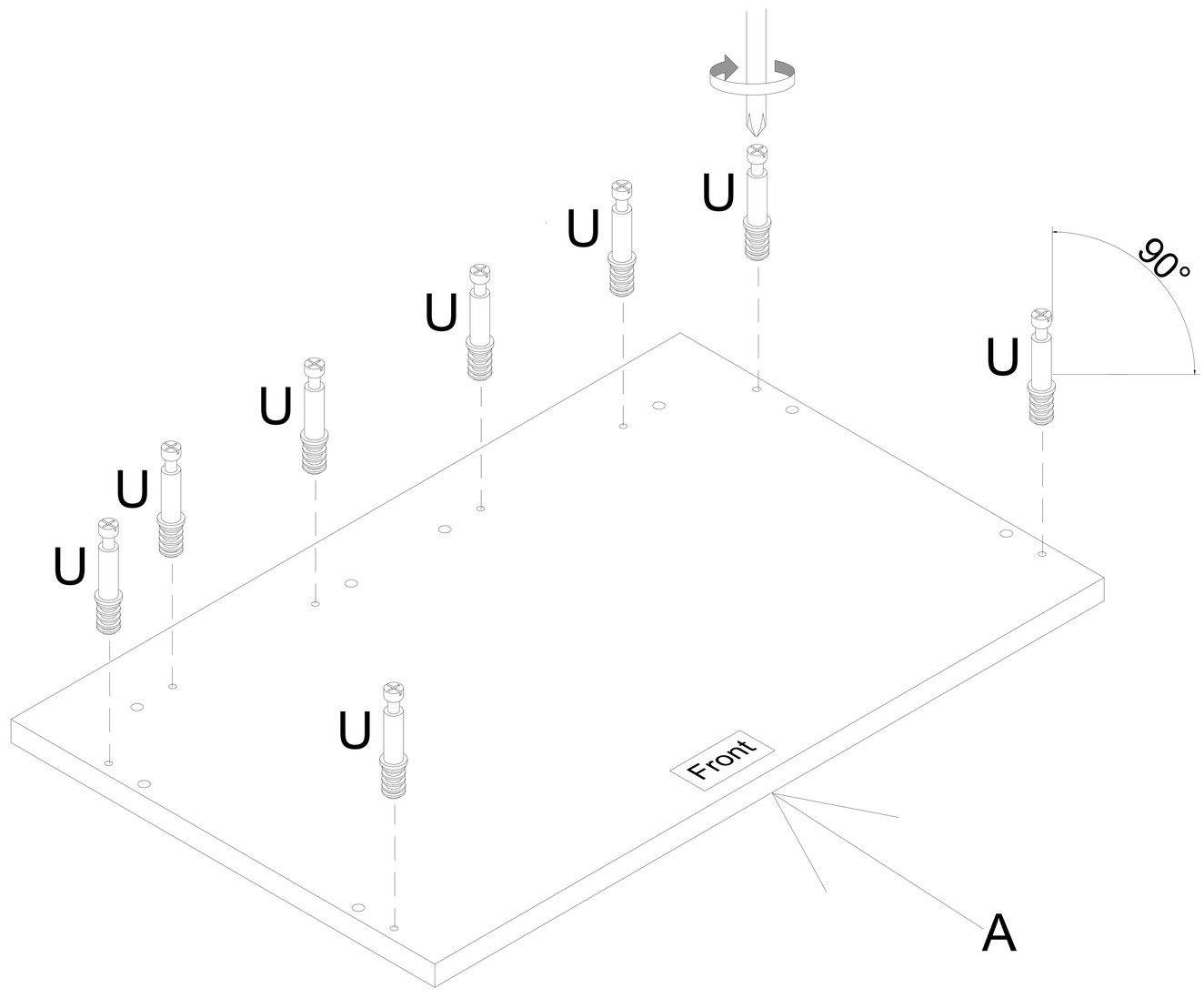

2 Insert Dowel (T), Cam Bolt (U) and Cam Lock (V) into the Left & Right Side Panel (B & C) with a screwdriver (not provided).

NOTE : - Ensure the arrows on each Cam Lock (V) point towards the nearest edge with holes.

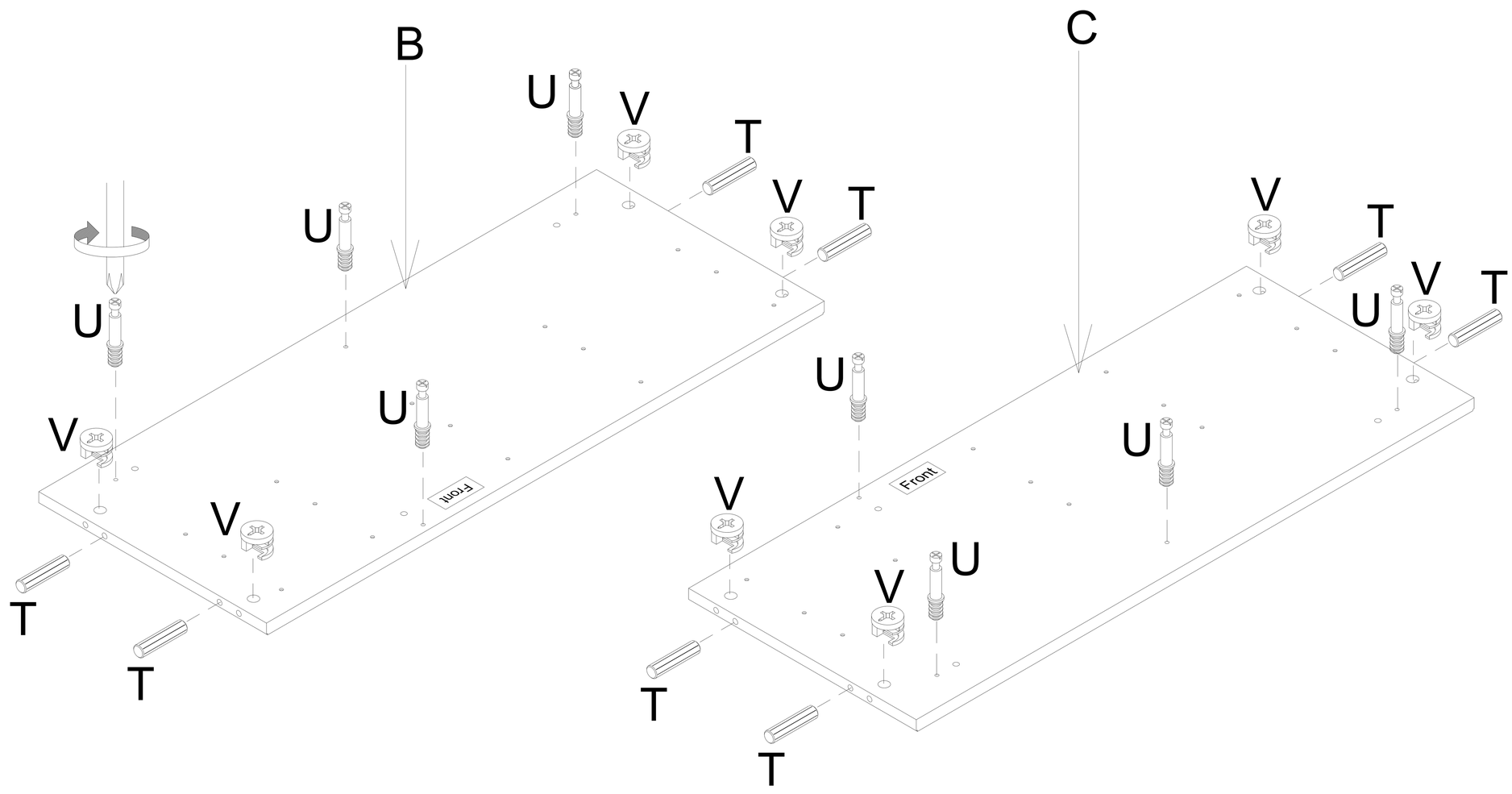

3

Disassemble the Runner (R) into two parts. Attach one part with runner rollers to the Left & Right Side Panel (B & C) using Screw (X) with a screwdriver (not provided). Attach the other part with slides to the Left & Right Small Drawer Side (I & J) and Left & Right Big Drawer Side (M & N).

NOTE : - Runner (R) should face the front of the panel.
- Assemble Screw (X) from the front of the runner, starting with X^1, X^2, then X^3.
- Ensure screws are installed vertically without tilting to fit properly into the holes.

EXTENSION RUNNER DISASSEMBLE STEPS:

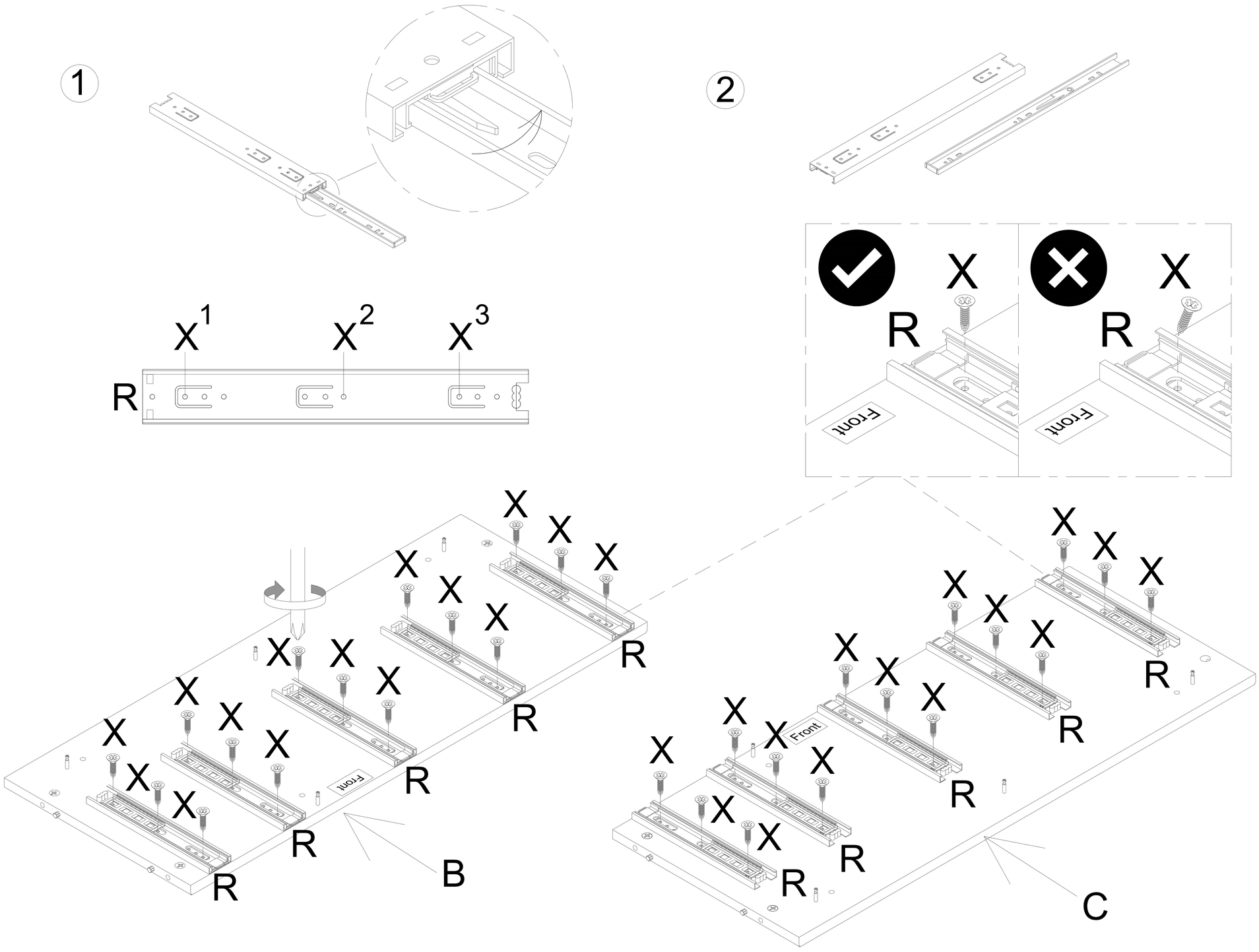

4

Insert Dowel (T) and Cam Lock (V) into the Back Left Panel (E), the Back Right Panel (F) and the Center Bar (G).

NOTE : - Ensure the arrows on each Cam Lock (V) point towards the nearest edge with holes.

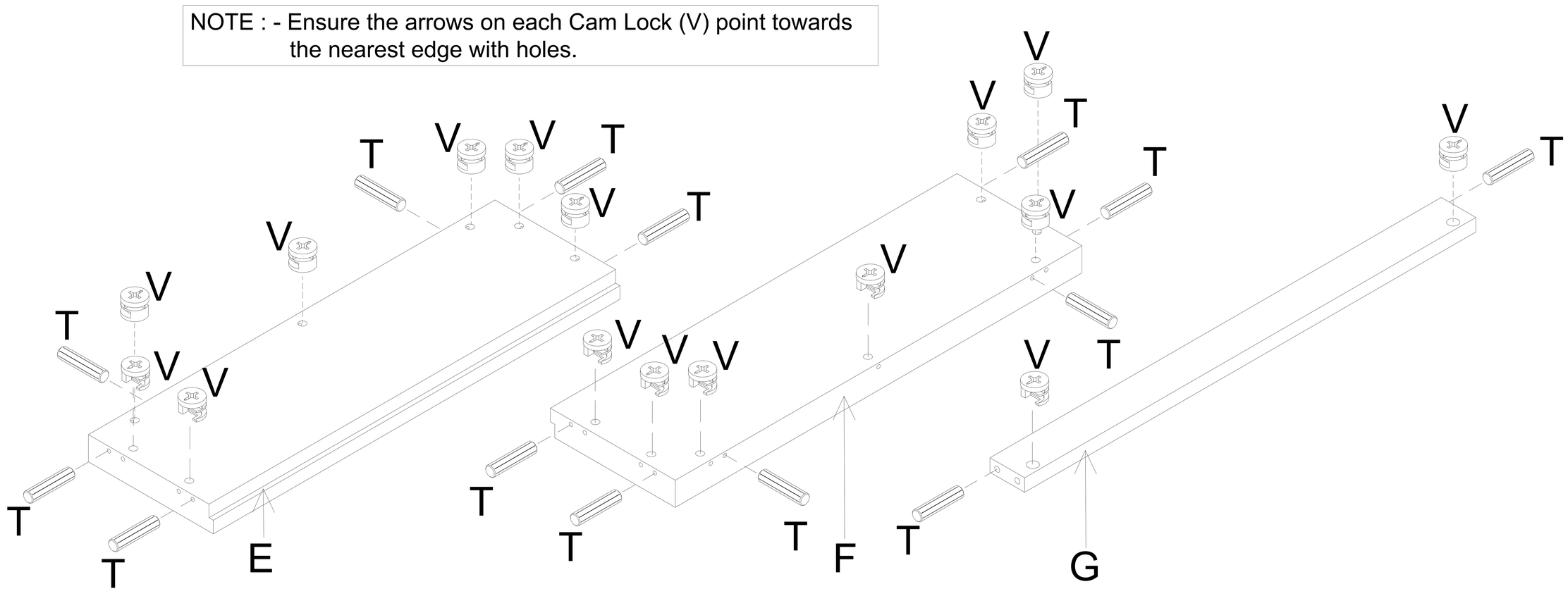

5 Attach the Post (H) to the Bottom Panel (D) using JCBC Bolt (Y), Spring Washer (Z) and Flat Washer (AA) with the Allen Key (AB).

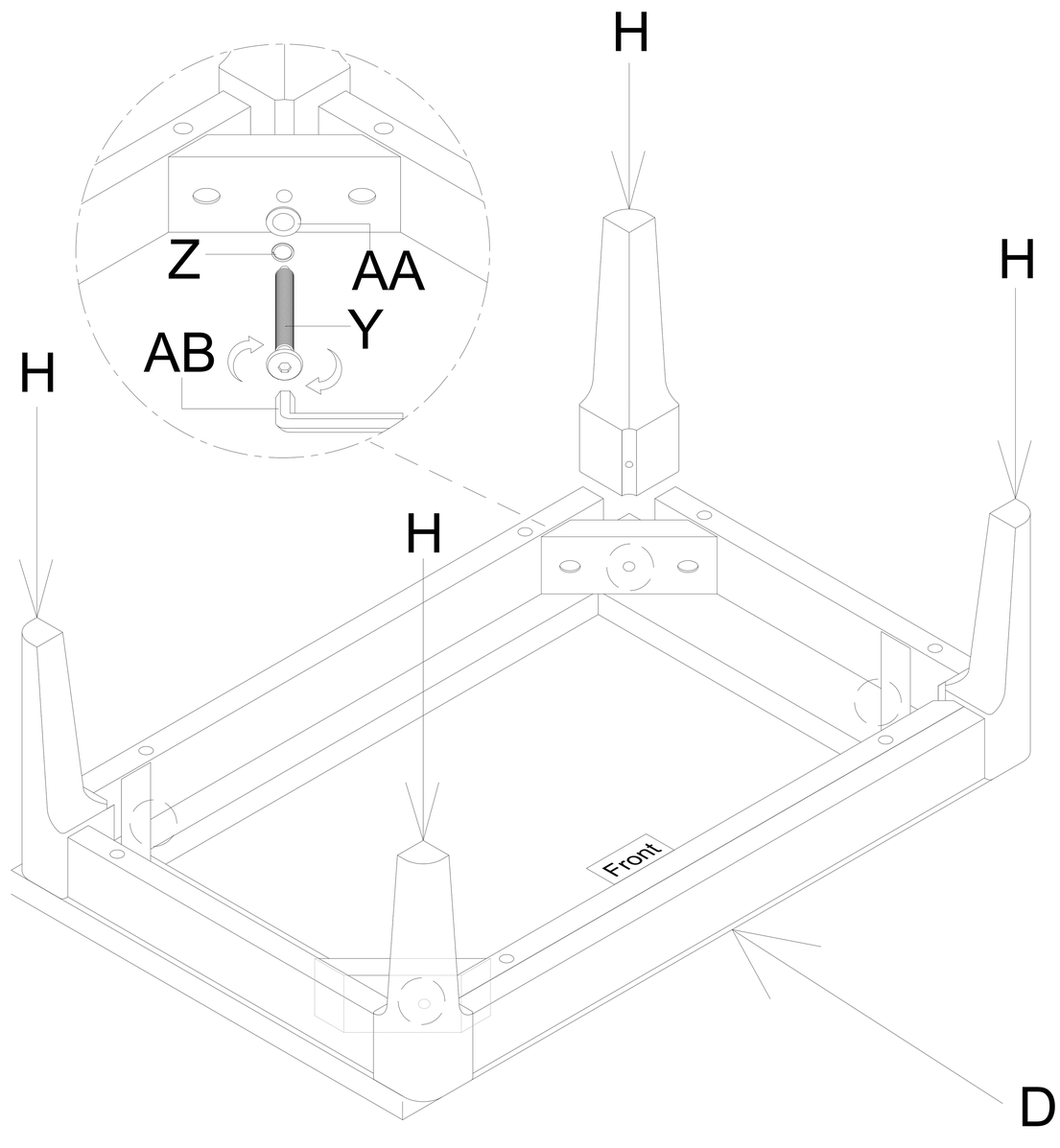

6 Flip over the Bottom Panel (D). Insert Cam Bolt (U) into the Bottom Panel (D) with a screwdriver (not provided).

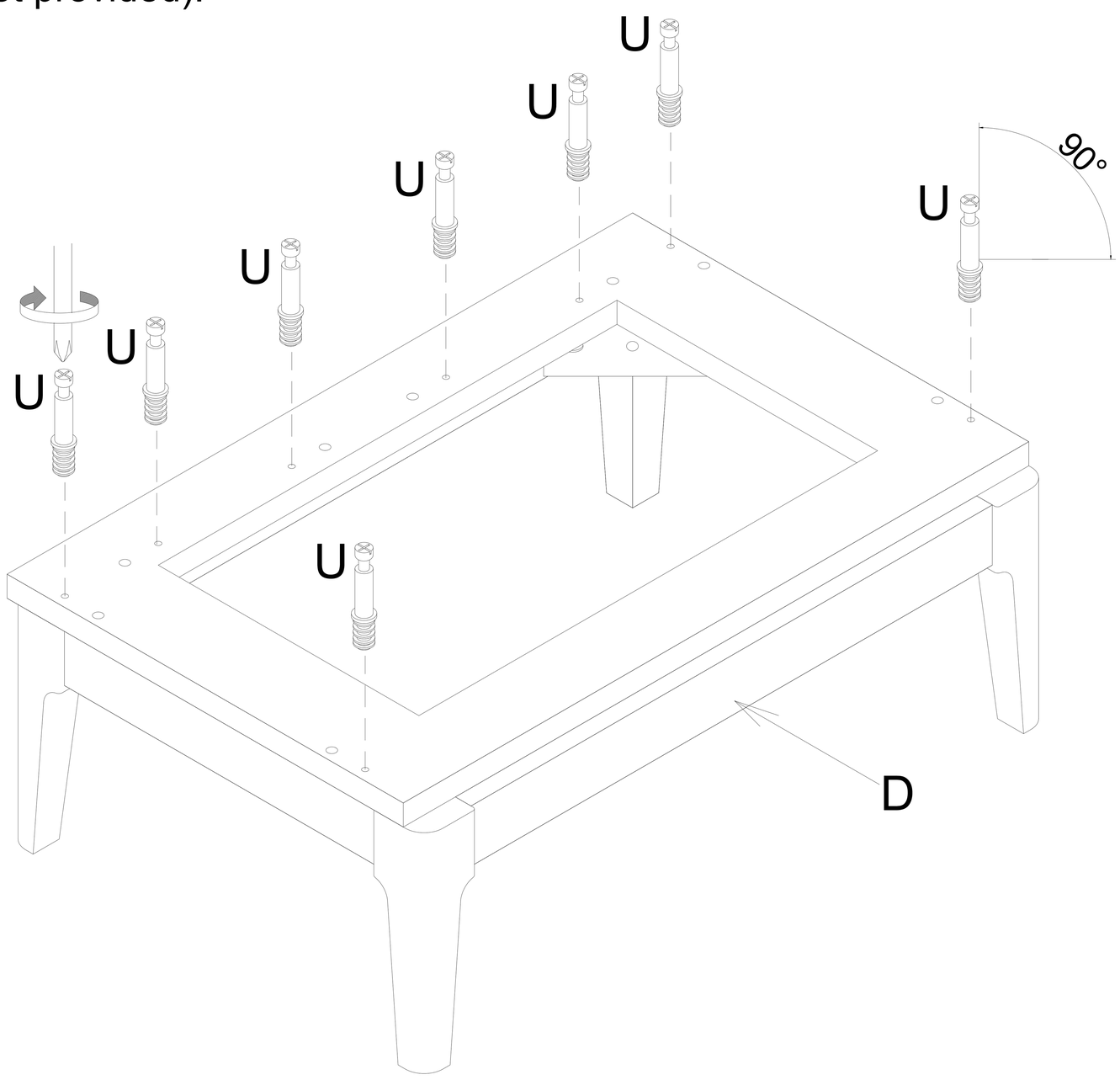

7 Attach the Left & Right Side Panel (B & C) to the Back Left & Right Panel (E & F), then attach the Center Bar (G) to the Left & Right Side Panel (B & C) and secure the Cam Lock (V) with a screwdriver (not provided). Cover the Cam Lock (V) with Cam Lock Cover (W).

NOTE : - Do not over tighten the Cam Lock (V).

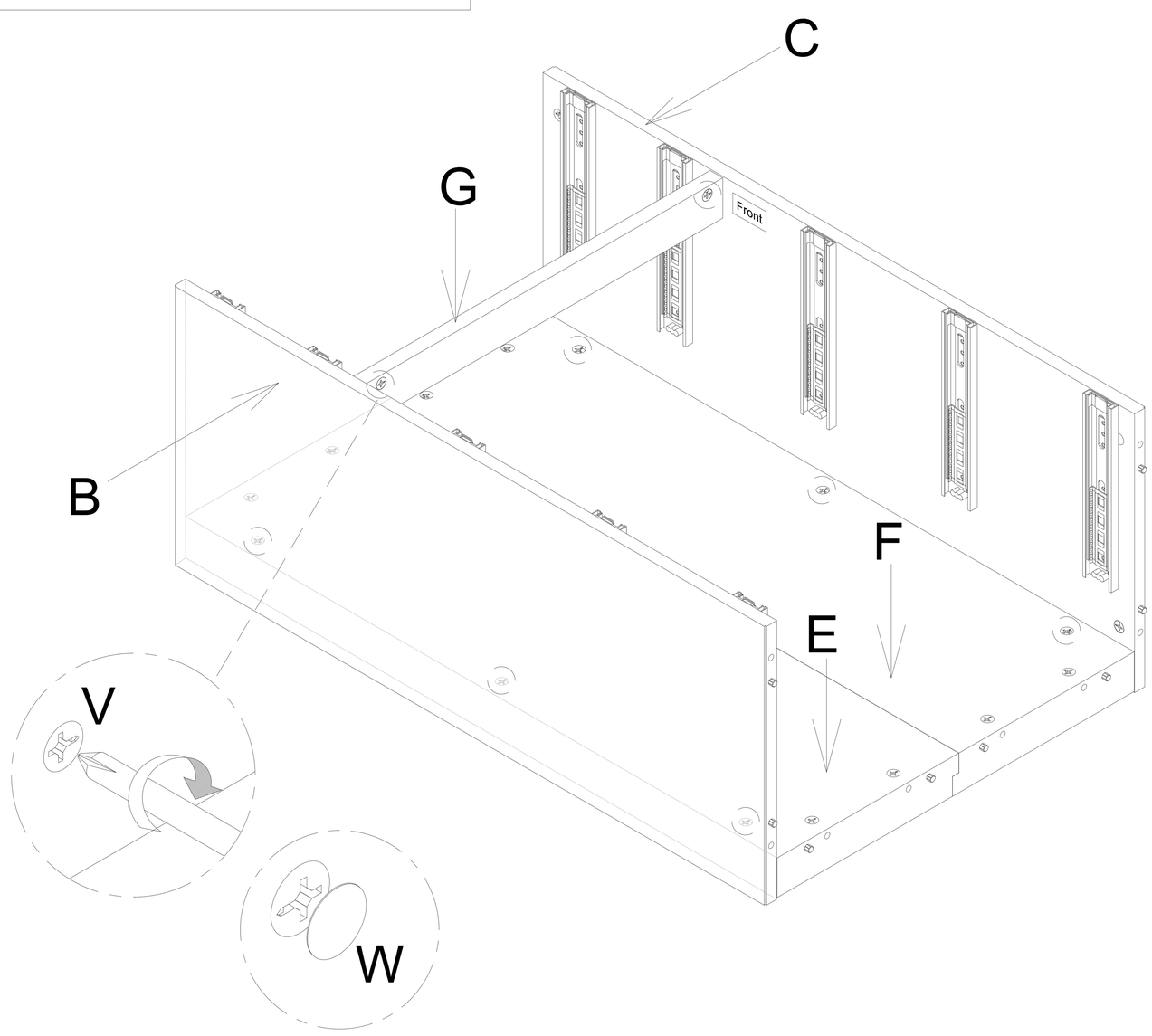

8 Attach the Left & Right Side Panel (B & C) and the Back Left & Right Panel (E & F) to the Bottom Panel (D) and secure the Cam Lock (V) with a screwdriver (not provided). Cover the Cam Lock (V) with Cam Lock Cover (W).

NOTE : - Do not over tighten the Cam Lock (V).

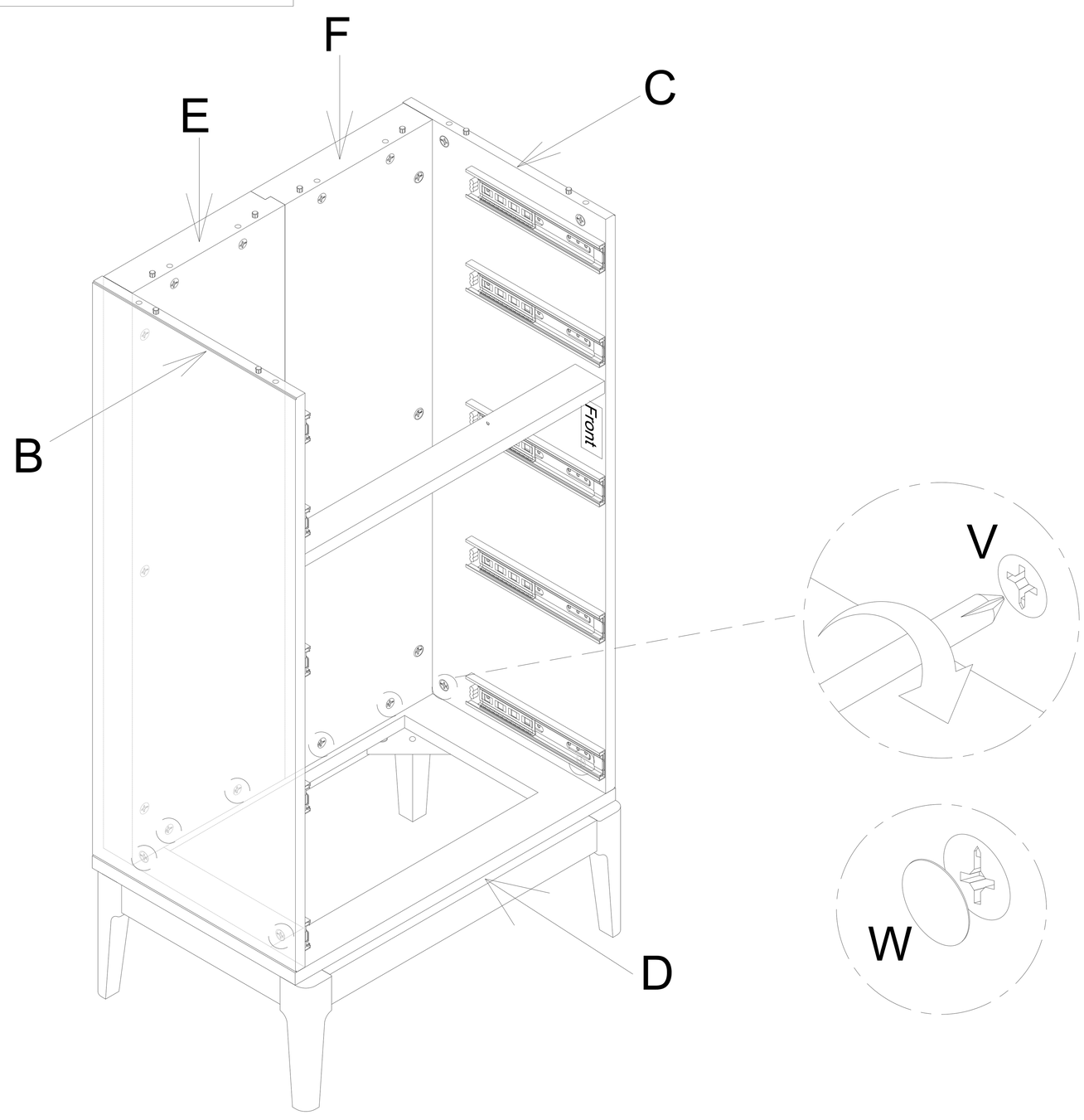

9 Attach the Top Panel (A) to the Left & Right Side Panel (B & C) and the Back Left & Right Panel (E & F) and secure the Cam Lock (V) with a screwdriver (not provided). Cover the Cam Lock (V) with Cam Lock Cover (W).

NOTE : - Do not over tighten the Cam Lock (V).

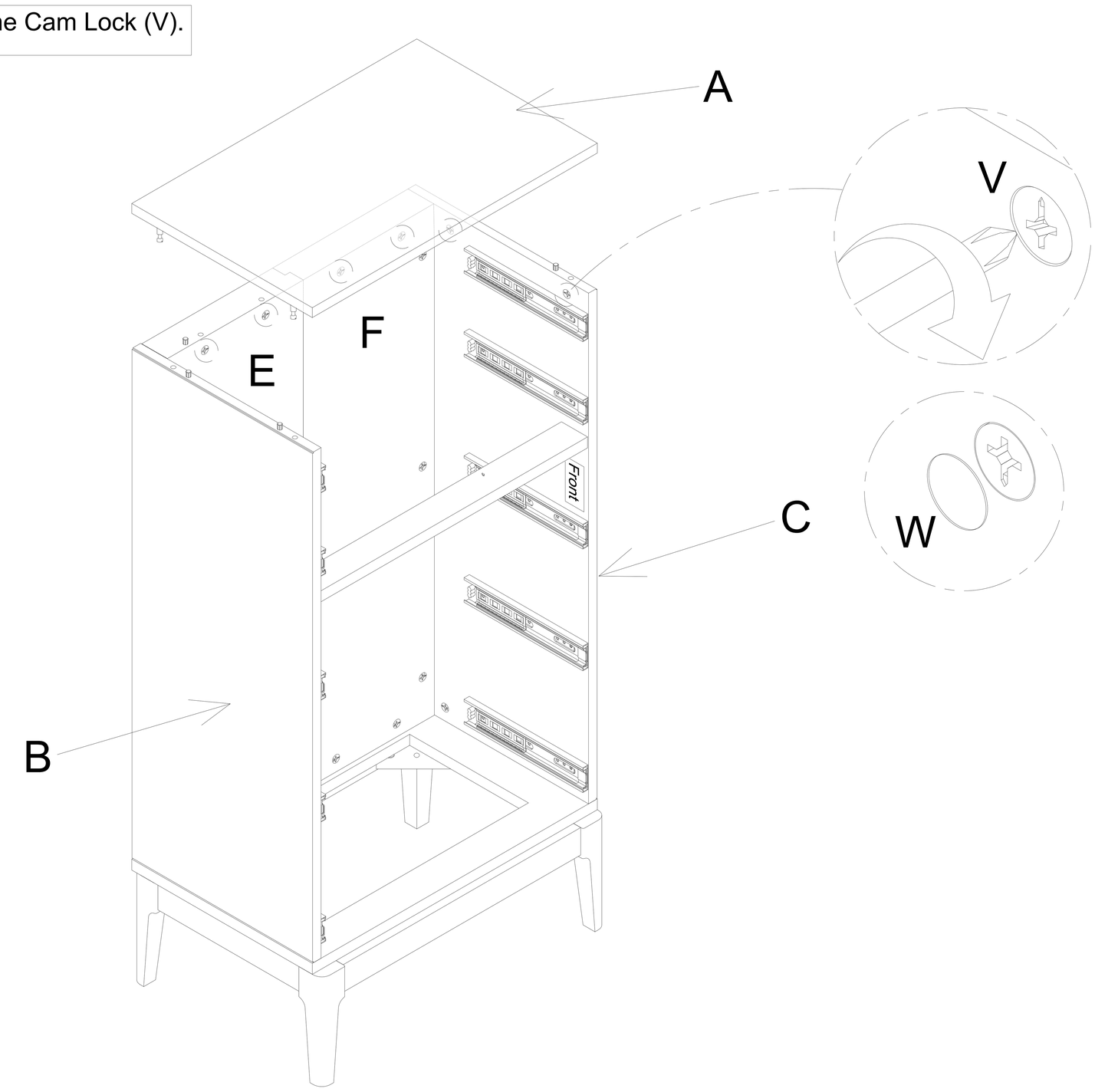

10 Attach Runner (R) to the Left & Right Small Drawer Side (I & J) using Screw (X) with a screwdriver (not provided).

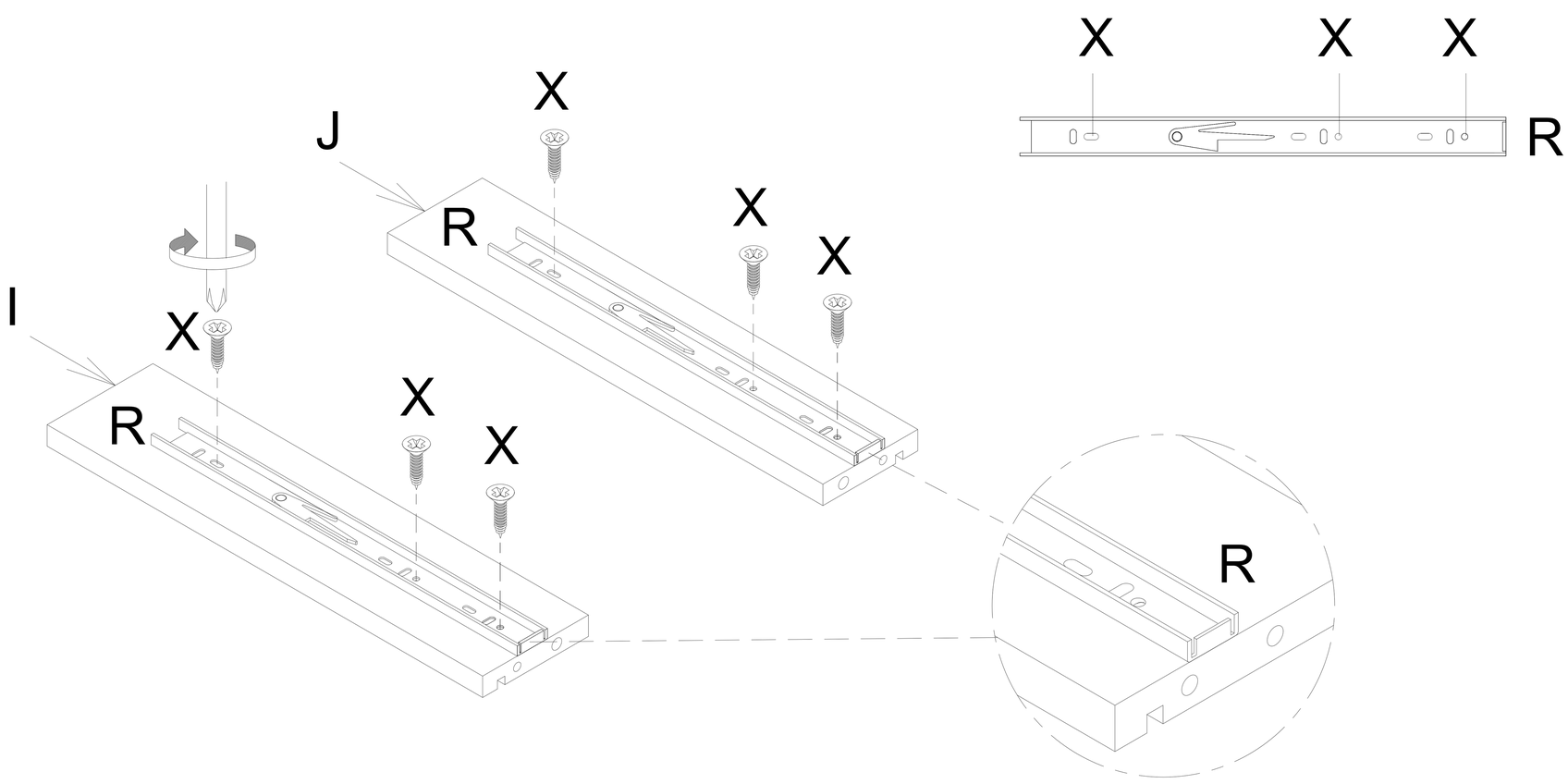

11 Attach Dowel (S) and Cam Lock (V) to the Left & Right Small Drawer Side (I & J) and the Small Drawer Back (L). Attach Cam Bolt (U) to the Left & Right Small Drawer Side (I & J) and the Small Drawer Front (K) with a screwdriver (not provided).

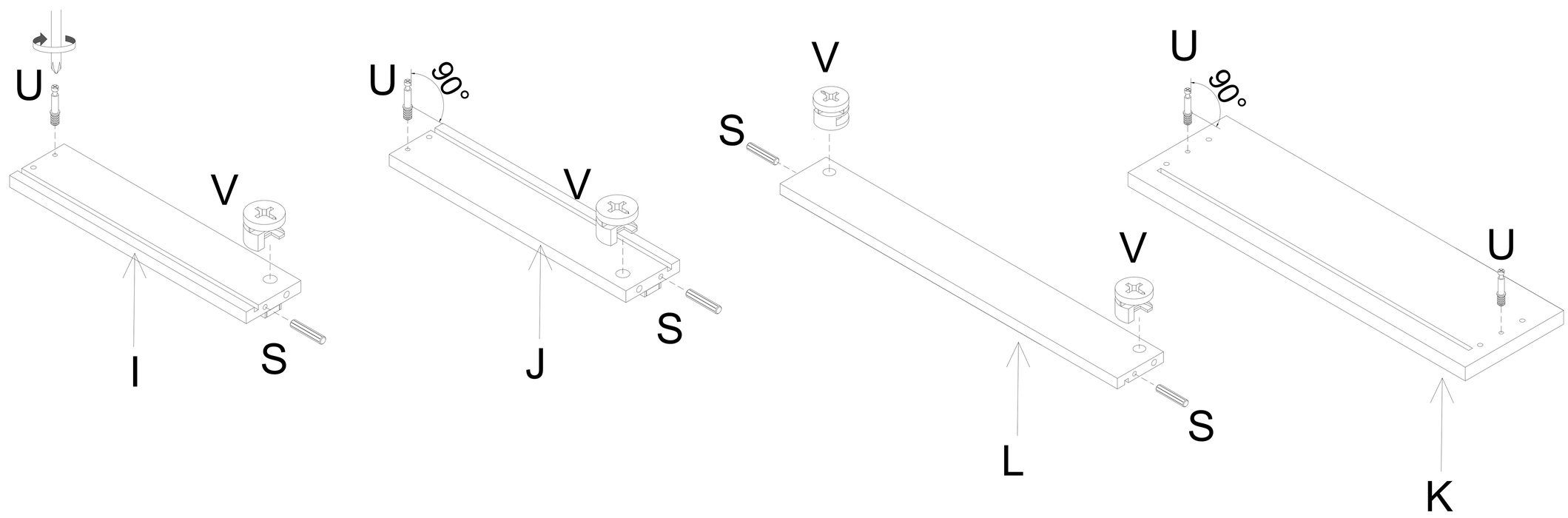

12 Attach the Left & Right Small Drawer Side (I & J) to the Small Drawer Back (L) and secure the Cam Lock (V) with a screwdriver (not provided). Cover the Cam Lock (V) with Cam Lock Cover (W).

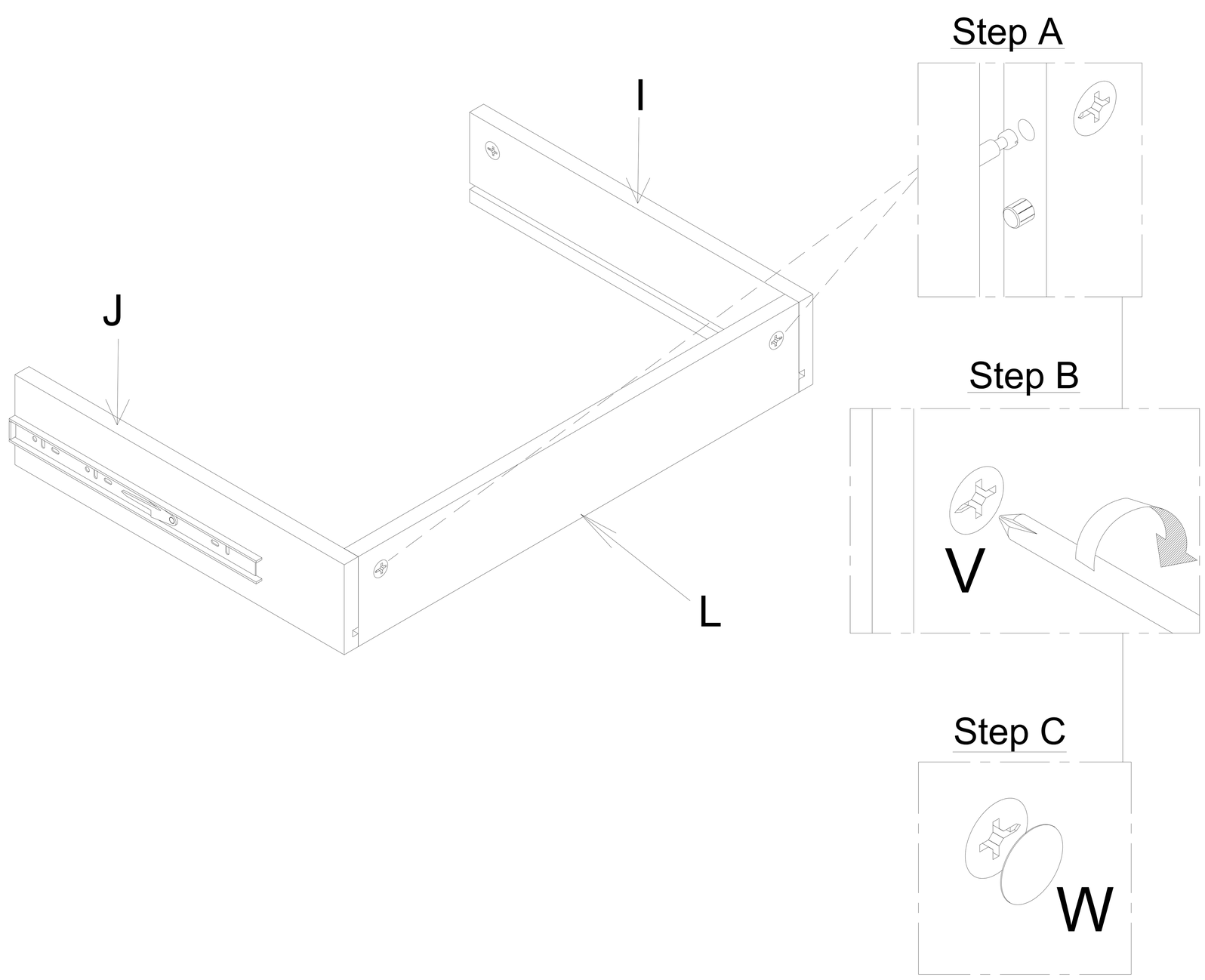

13 Slot the Drawer Base (Q) into the grooves of the drawer box. Attach the Small Drawer Front (K) to the drawer box and secure the Cam Lock (V) with a screwdriver (not provided). Cover the Cam Lock (V) with Cam Lock Cover (W).

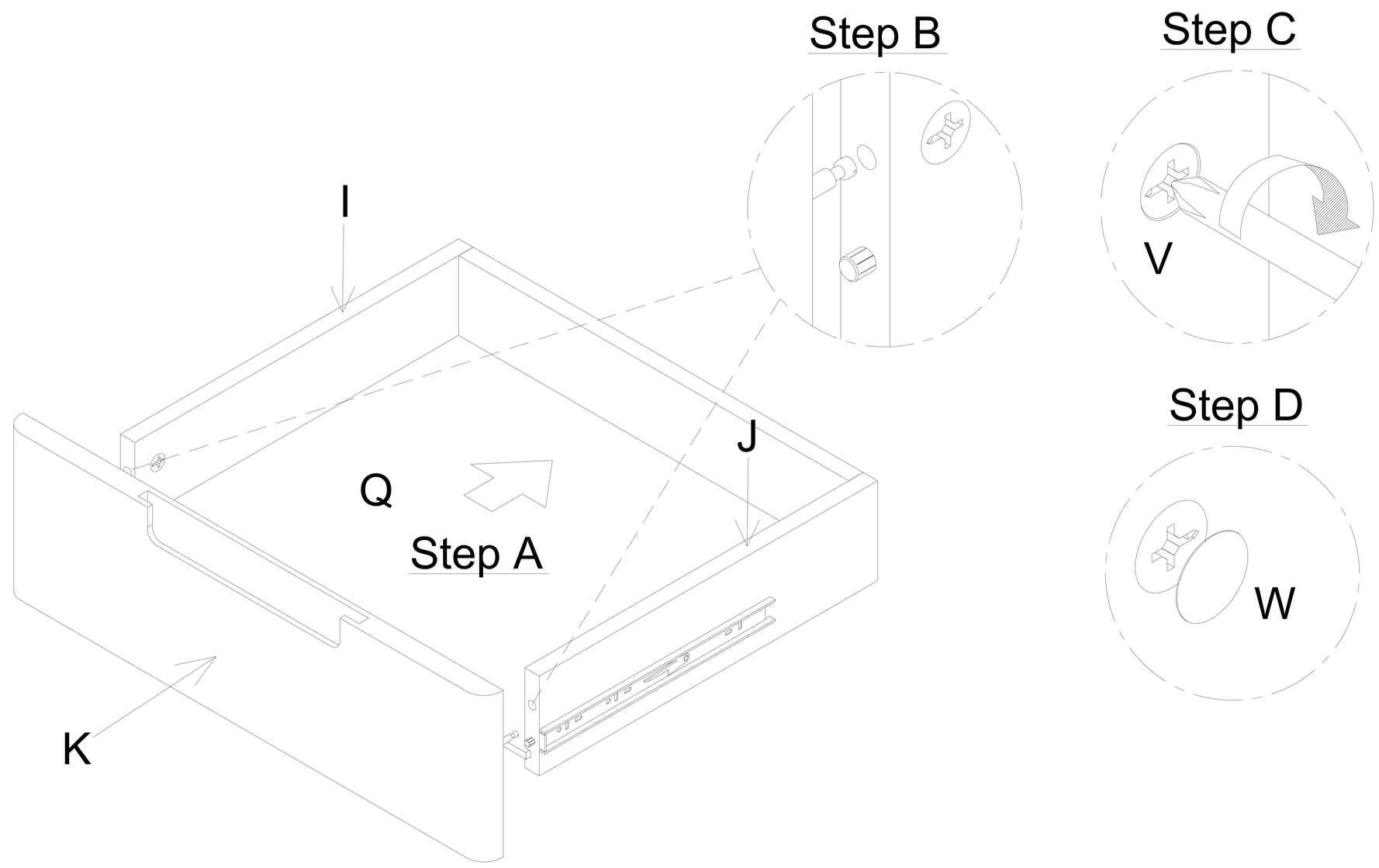

14 Attach Runner (R) to the Left & Right Big Drawer Side (M & N) using Screw (X) with a screwdriver (not provided).

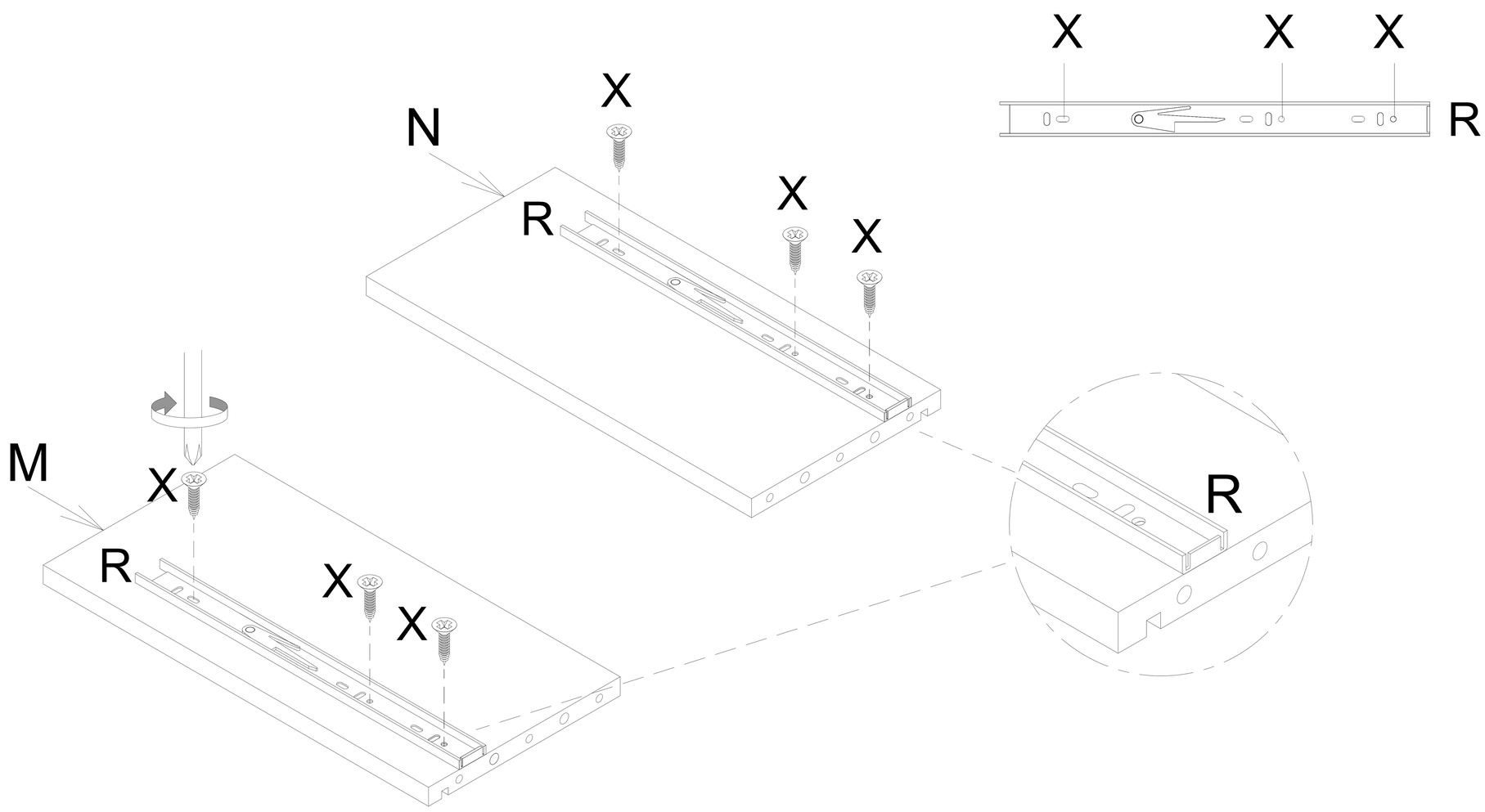

15 Attach Dowel (S) and Cam Lock (V) to the Left & Right Big Drawer Side (M & N) and the Big Drawer Back (P). Attach Cam Bolt (U) to the Left & Right Big Drawer Side (M & N) and the Big Drawer Front (O) with a screwdriver (not provided).

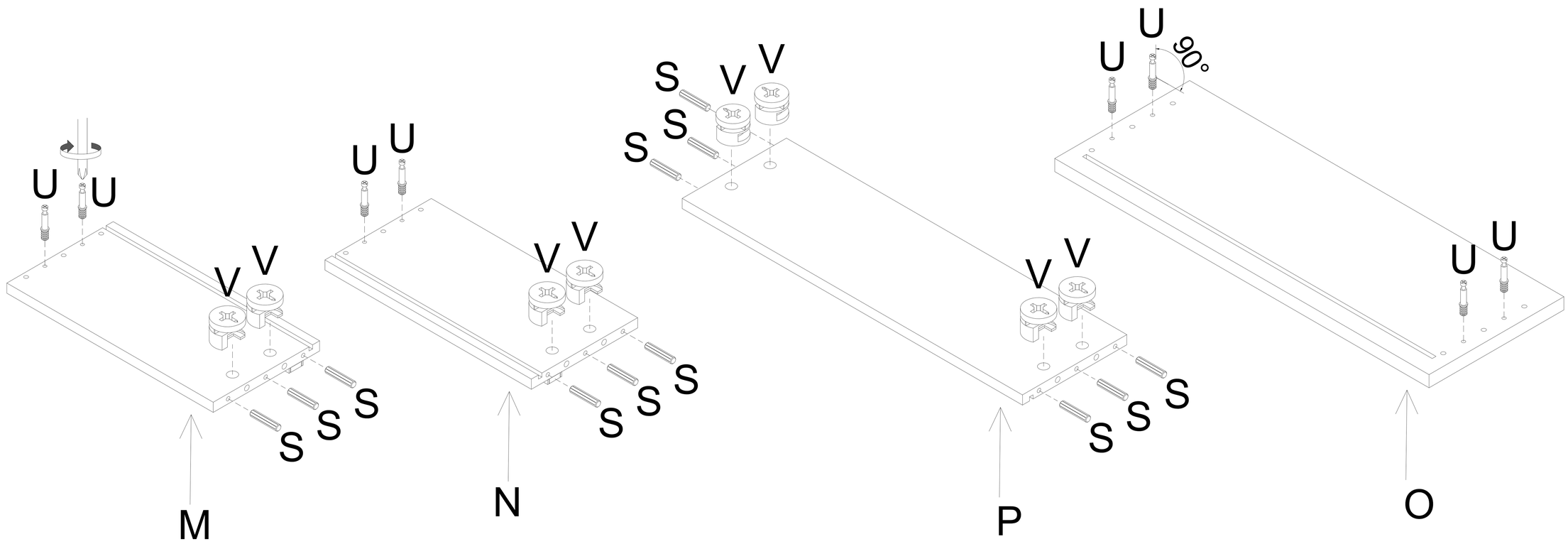

16 Attach the Left & Right Big Drawer Side (M & N) to the Big Drawer Back (P) and secure the Cam Lock (V) with a screwdriver (not provided). Cover the Cam Lock (V) with Cam Lock Cover (W).

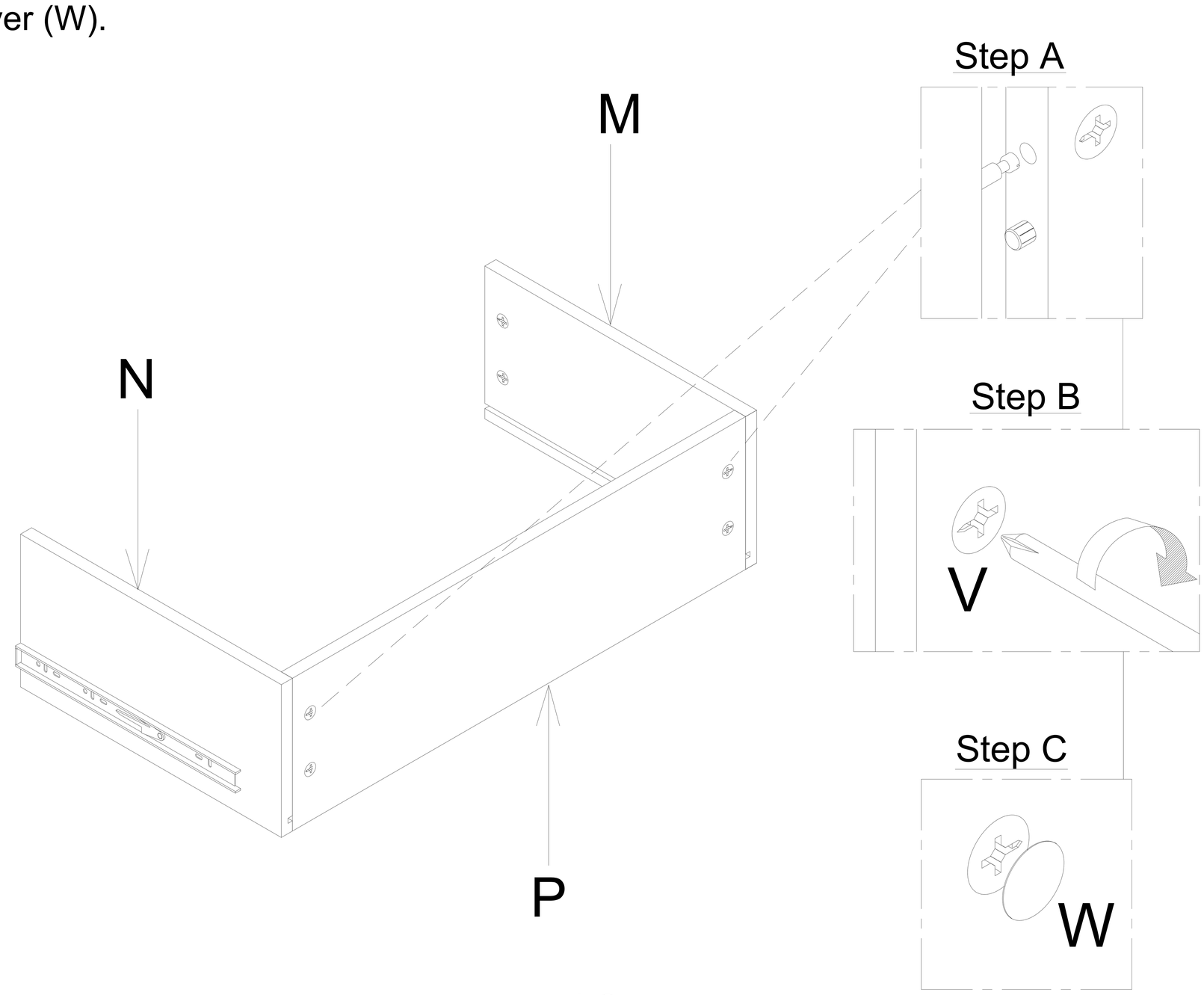

17 Slot the Drawer Base (Q) into the grooves of the drawer box. Attach the Big Drawer Front (O) to the drawer box and secure the Cam Lock (V) with a screwdriver (not provided). Cover the Cam Lock (V) with Cam Lock Cover (W).

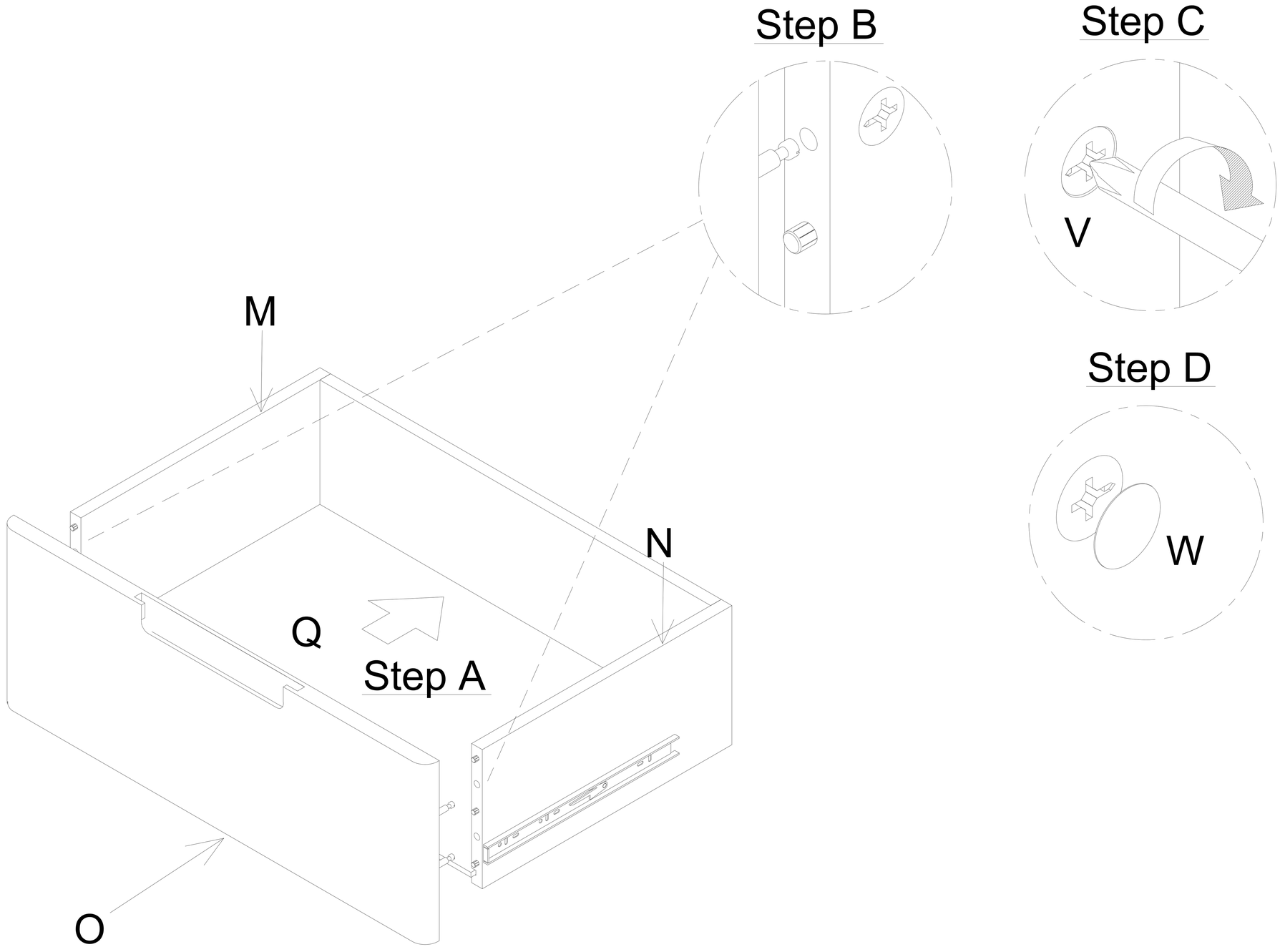

18 Pull out the metal chrome plates from both sides of the Runner (R). Align the metal chrome plates with the slides on one drawer side, then repeat on the other side. If they are not aligned properly, remove and try again. Once both tracks are aligned properly, slowly push the drawer all the way in.

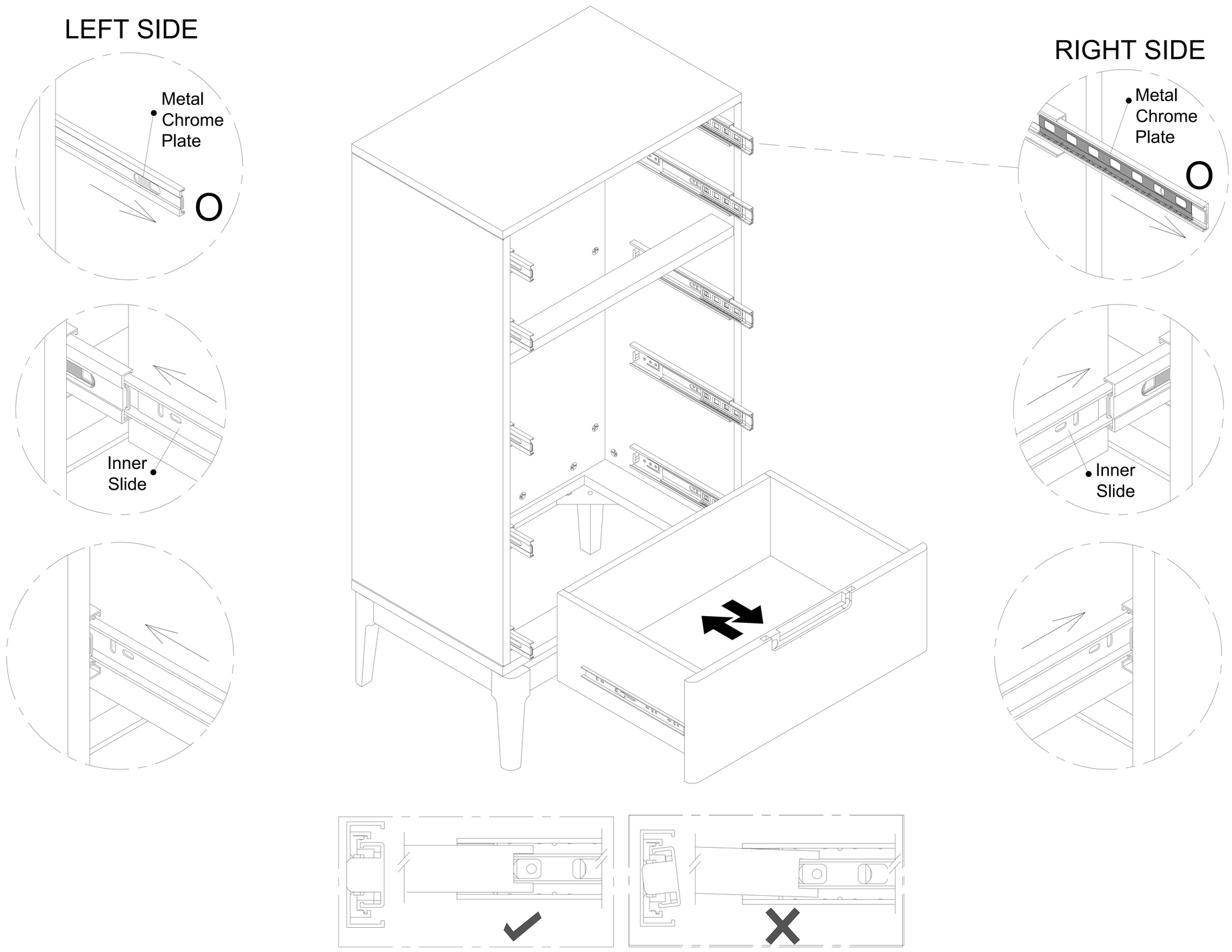

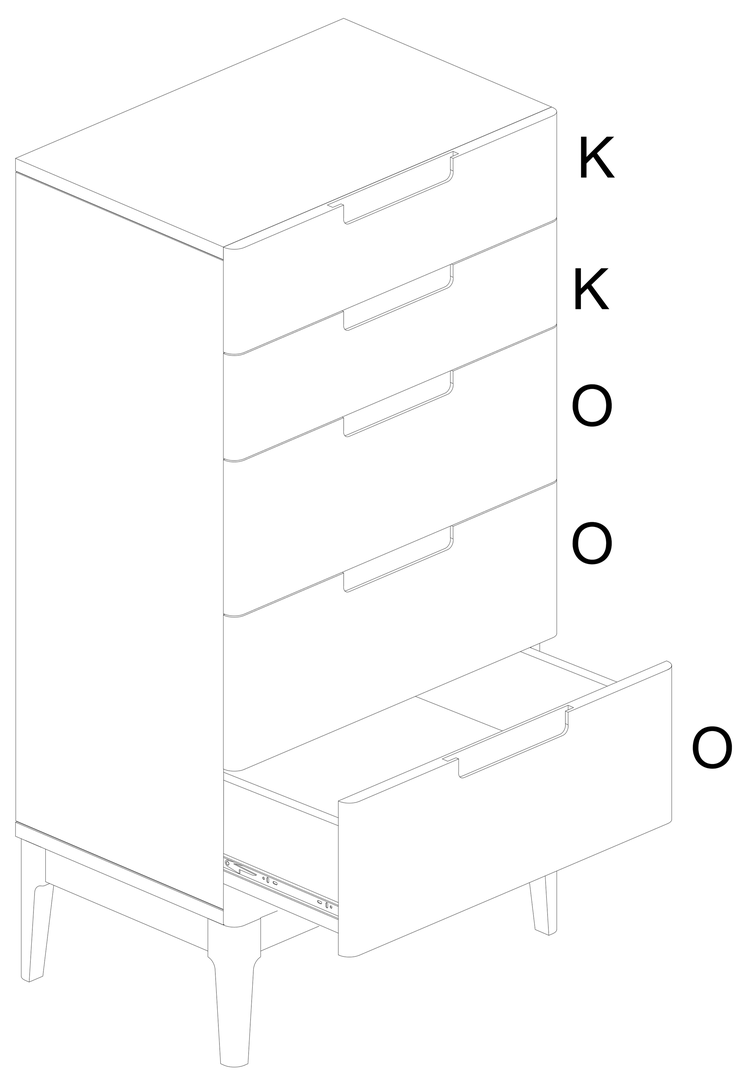

19 Attach the Anti-Tip Kit (AC) to the wall. Mount the bracket vertically to wall using the long screw. Then, secure the bracket vertically to the furniture back below the top using the short screw. Place the bracket as close to the center of the furniture back as possible, considering the wall stud and desired position in the room. Move furniture to its final position. Thread the bracket and pull it tight.

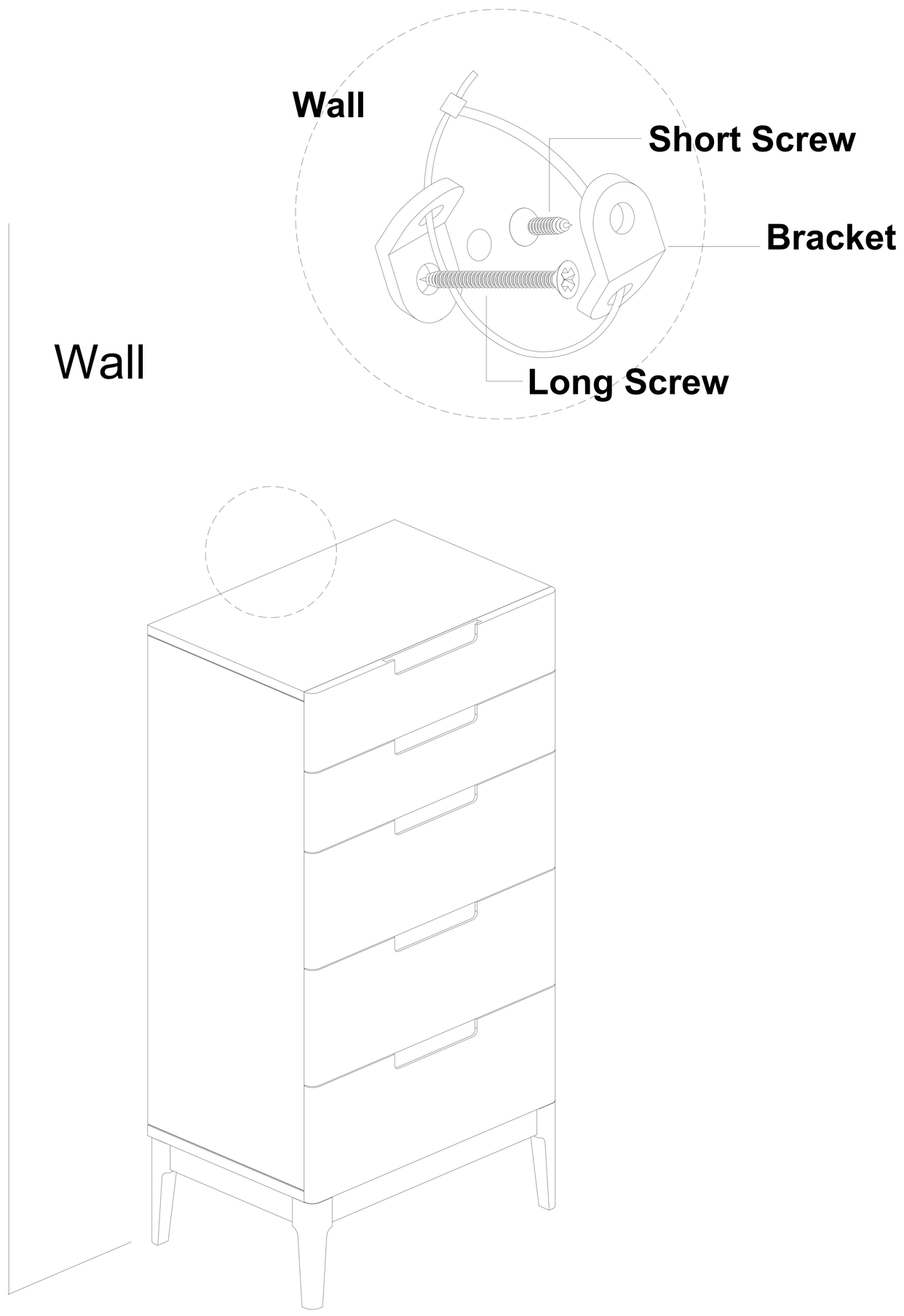

Cleaning & Care
Treat surfaces with care. Surfaces are resistant to scratches but are not scratch resistant. Clean surfaces with a dry or damp soft cloth. Do not use abrasive cleaners. Hardware may loosen over time. Periodically check that all connections are tight.