Parts:

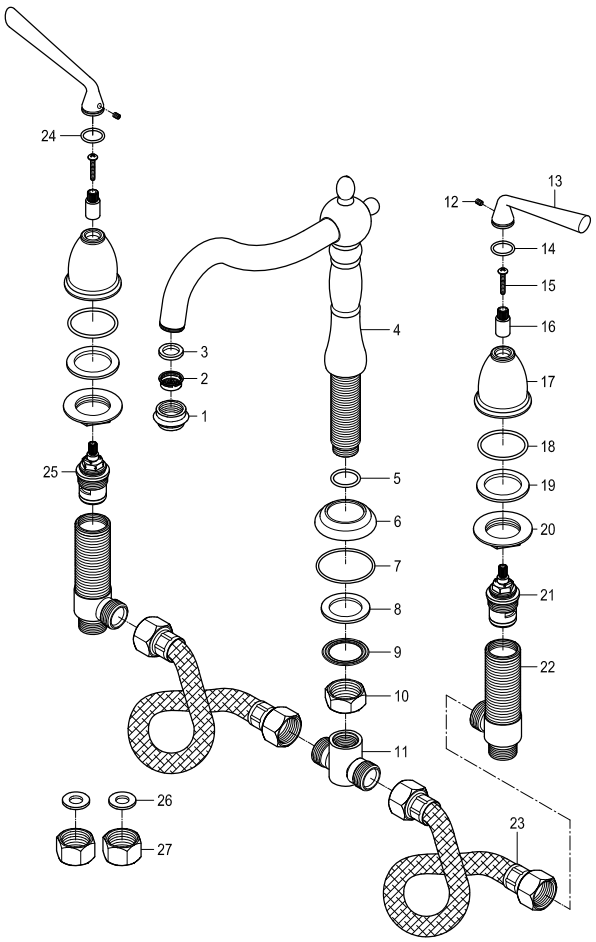

Replacement Parts:

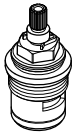

Hot Cartridge: KSRPT1341HC

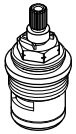

Cold Cartridge: KSRPT1341CC

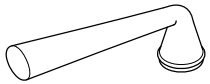

Hot Handle: KSH2971ZLH

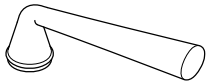

Cold Handle: KSH2971ZLC

KINGSTON

KITCHEN & BATH

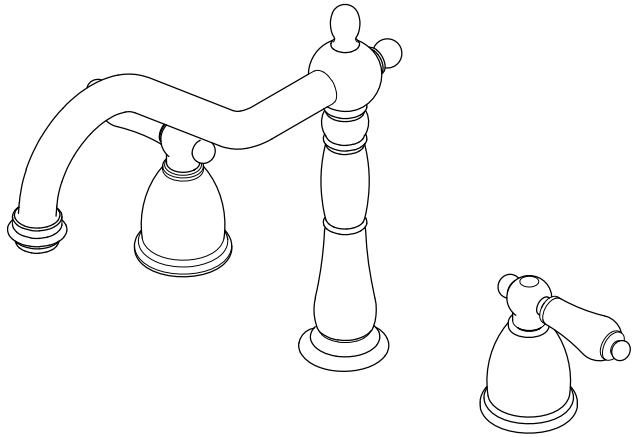

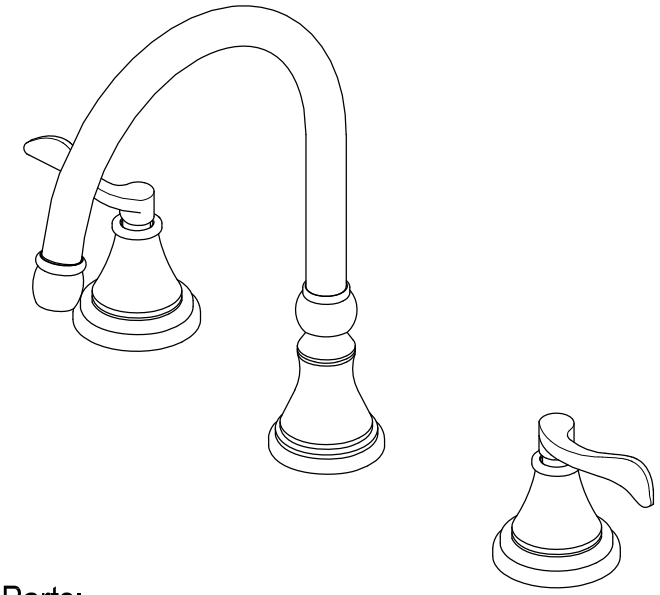

CARE AND MAINTENANCE OF YOUR FAUCET

Your Kingston Brass faucet has been finished to the most strict standards; however, due to the high content of minerals in the water, your finish may appear dull and tarnished after time. These are some do's and don'ts to maintain the luster on your faucet for many years to come.

DO
1. Use a silicon based caulking when installing.
2. Clean your faucet with only a mild soap and water solution.
3. Dry your faucet after using it.
4. Give it a coat of Carnauba Wax periodically.

DON'T
1. Use plumbers putty when installing the faucet.
2. Use any abrasive cleaning agents.

It may seem like a very simple and short list but it is that simple to maintain your faucet, looking shiny and new.

If your faucet is already looking somewhat dull and tarnished, before replacing it, try cleaning it with a 50/50 solution of vinegar and water, you may need to soak some rags and wrap around those stubborn areas, leave overnight and rinse completely in the morning, apply Carnauba wax once you have removed the mineral deposits.

Parts:

Washer & Lock Nut	Washer & Coupling Nut
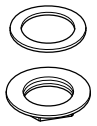	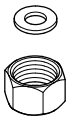
2 Pcs	2 Pcs

www.kingstonbrass.com
TOLL-FREE CUSTOMER SERVICE: 1-877-2-KBRASS
TECHNICAL SUPPORT E-mail: service@kingstonbrass.com
12775 Reservoir Street, Chino, CA 91710

NOTICE

Failure to follow all directions may cause leaks which may result in water damage

KINGSTON
KITCHEN & BATH

INSTALLATION INSTRUCTIONS
Roman Tub Filler

BEFORE BEGINNING INSTALLATION:

1. Flush plumbing lines to clear any debris.
2. Shut off both supply lines after flushing.

1

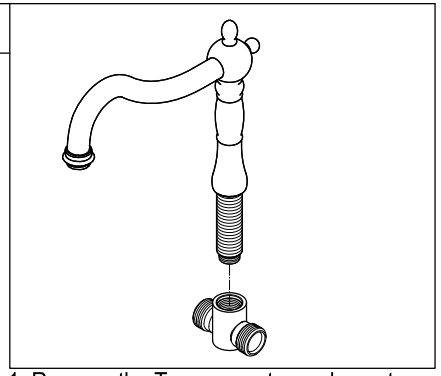

1. Remove the Tee connector and spout mounting hardware from spout .

2

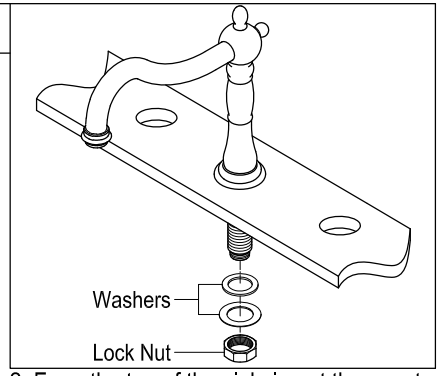

2. From the top of the sink, insert the spout base ring (if applicable) and spout through the center hole, slip the washers back on the spout shank, secure by tightening the lock nut.

3

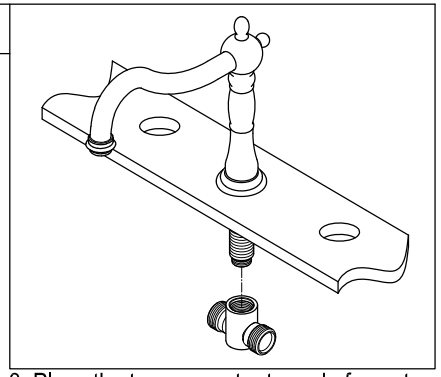

3. Place the tee connector to end of spout and thread Tee onto spout shank.

4

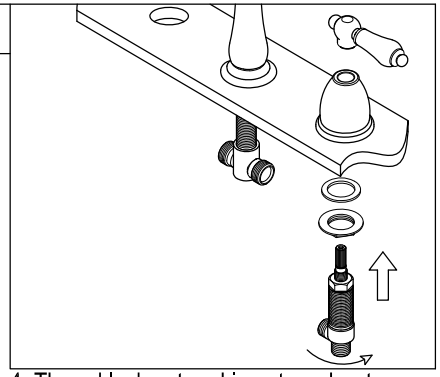

4. Thread lock nut and insert washer to valve assembly, make sure to thread all the way to the bottom of the threads, insert from the bottom, while holding it in position insert flange and attach handle, adjust flange so handle can move freely, tighten lock nut from bottom, making sure valve assembly port is pointing to spout.

Warning!!!

- Do not over-tighten nut during installation.
- Over-tighten may crack the valve and cause severe leak.

Need Tools:



Basin Wrench | Adjustable Wrench | Teflon Tape | Silicone Sealant | Screwdriver

5

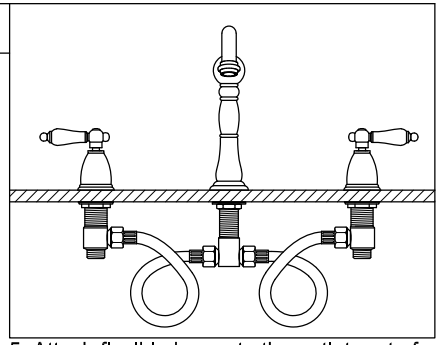

5. Attach flexible hoses to the outlet port of hot and cold valve assembly. You may need to loop the hoses as shown on graphic and be caution not to overtighten.

6

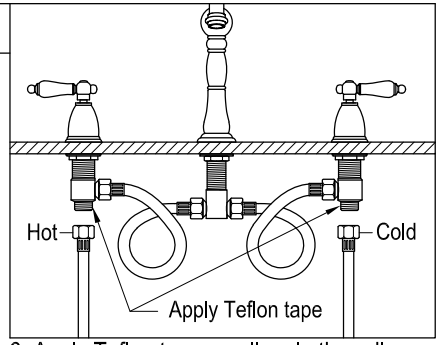

6. Apply Teflon tape on all male threading and install inlet supply lines (not included) to bottom inlet port of hot and cold valve assembly.

7

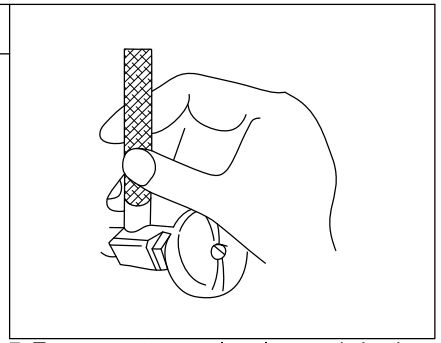

7. Turn on water supply valves and check for leaks, especially all supply line connections.

8

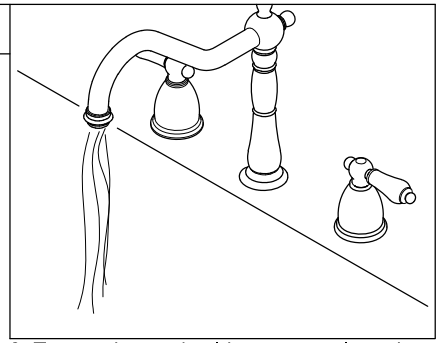

8. Turn on hot and cold water supply and check for leaks.

Warning!!!

- DO NOT STEP ON faucet or supply line installation. This fixture is not a stair to access your storage, window or access higher ceiling. This Cast Brass Faucet cannot support your body weight. To step on faucet will crack the fitting and eventual fracture to cause water damage to your property.
- The faucet was tested and meets ASME/ANSI code on its operation, loading and torque pressure. However this faucet is not designed to support weight over 250 pound per square inch of pressure, DO NOT OVERTIGHTEN. DO NOT APPLY ELECTRICAL TOOL to fasten faucet installation.
- For Exposed tub supply line installation faucet model, your supply lines have to be installed on corner area, or at area with no walking traffic access to cause accidental tamper or accidental breakage. For installation of exposed supply line at open traffic area is prohibited.
- Removal of this tag prior to installation will void your warranty. Pass the WARNING TAG to the owner after installation.

© 2022-10-E Kingston Brass