KINGSTON

TO ORDER PARTS, CALL: 1-877-252-7277
www.kingstonbrass.com

GKFA331810BCD

33" Solid Surface White Stone Farmhouse Double Bowl Kitchen Sink

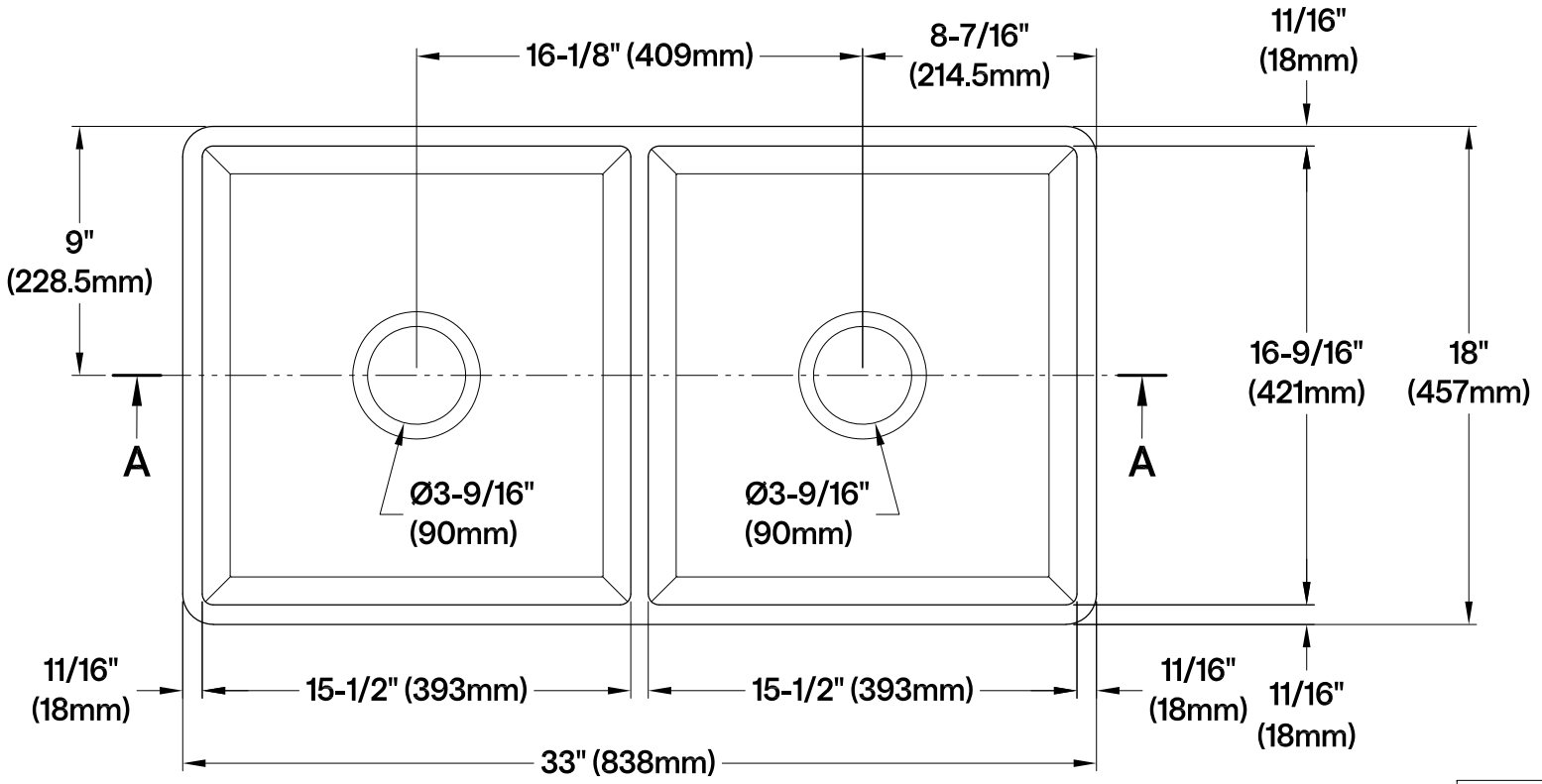

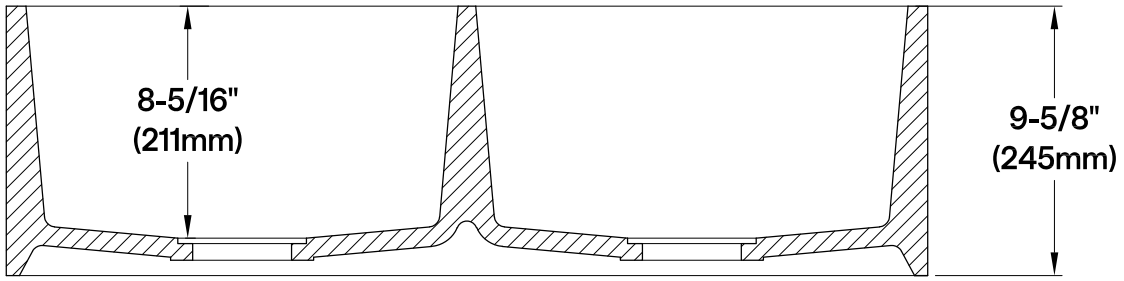

Section A-A

Strainer x 2 pcs

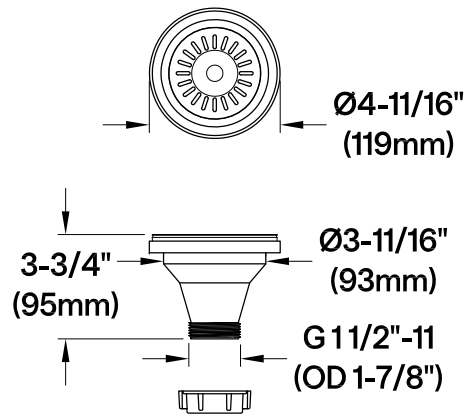

2026-04-A